TYPICAL X-SECTION

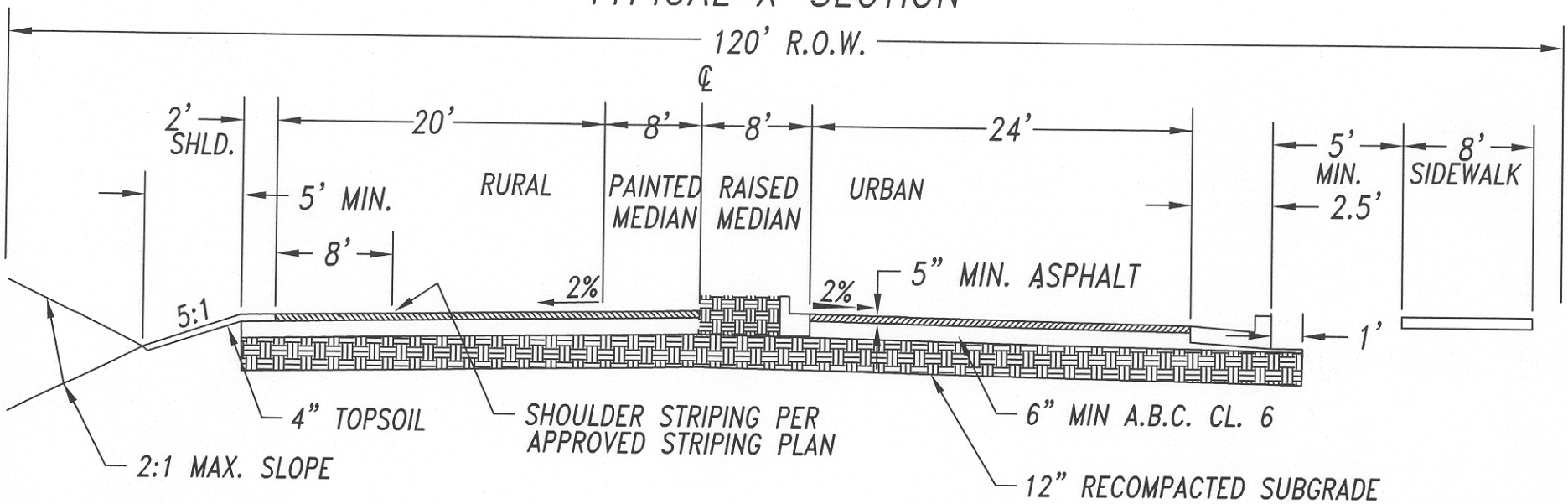

NOTES:
1. Pavement design by a professional engineer is required – see Article No. 6.
2. Full depth asphalt design allowed only with approval of Director of Public Works.
3. Depth of A.B.C. class 6 to be supported by pavement design. Depth over 6" may be class 2 A.B.C. – minimum 4" depth.
4. Additional right-of-way may be required where acceleration/deceleration lanes or turn lanes are required.

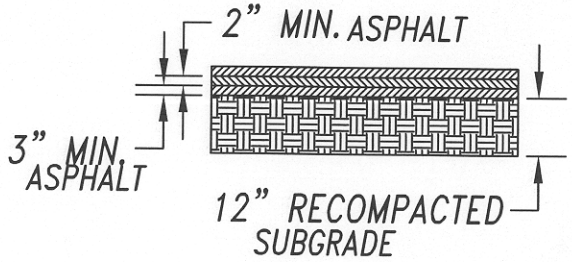

FULL DEPTH ASPHALT OPTION
MIN. TOTAL ASPHALT DEPTH – 7 INCHES

PRINCIPAL ARTERIAL		
PUEBLO COUNTY PUBLIC WORKS	APPROVED: 4-23-98 REVISED: REVISED:	FIGURE NO. 1

C:\ROADSTND\PRIN-ART.DWG

TYPICAL X-SECTION

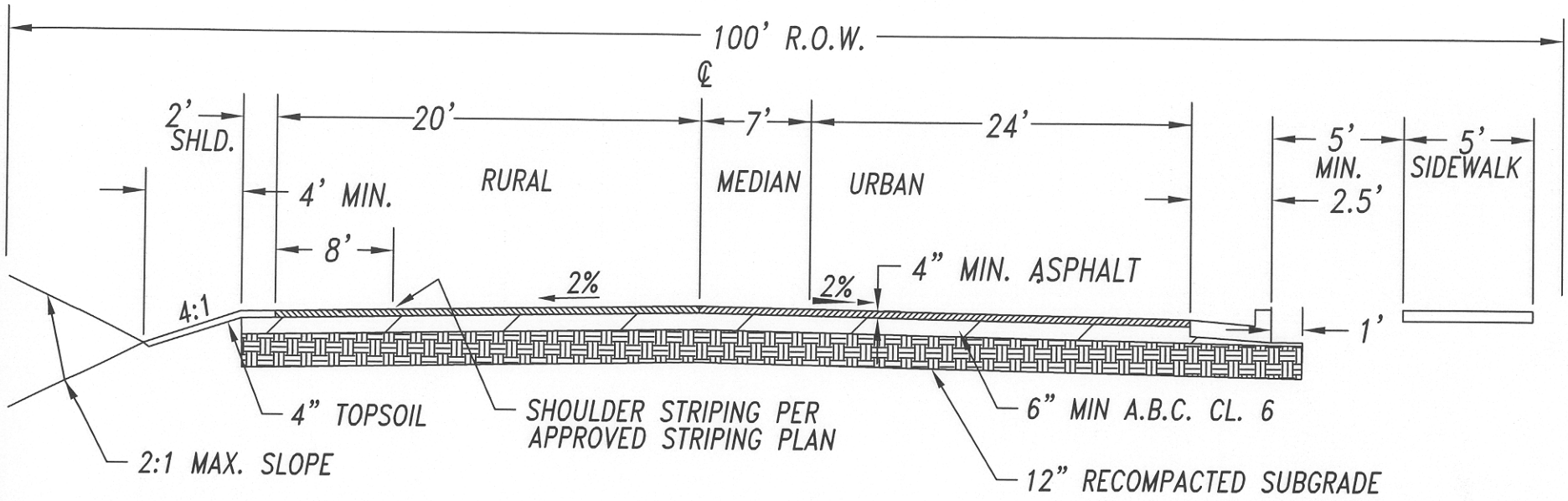

NOTES:
1. Pavement design by a professional engineer is required – see Article No. 6.
2. Full depth asphalt design allowed only with approval of Director of Public Works.
3. Depth of A.B.C. class 6 to be supported by pavement design. Depth over 6" may be class 2 A.B.C. – minimum 4" depth.
4. Additional right-of-way may be required where acceleration/deceleration lanes or turn lanes are required.

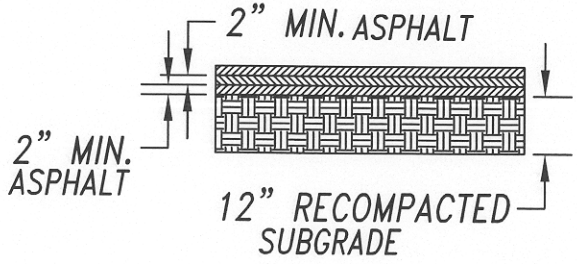

FULL DEPTH ASPHALT OPTION
MIN. TOTAL ASPHALT DEPTH – 6 INCHES

MINOR ARTERIAL		
PUEBLO COUNTY PUBLIC WORKS	APPROVED: 4-23-98 REVISED: REVISED:	FIGURE NO. 2

C:\ROADSTND\MINR-ART.DWG

TYPICAL X-SECTION

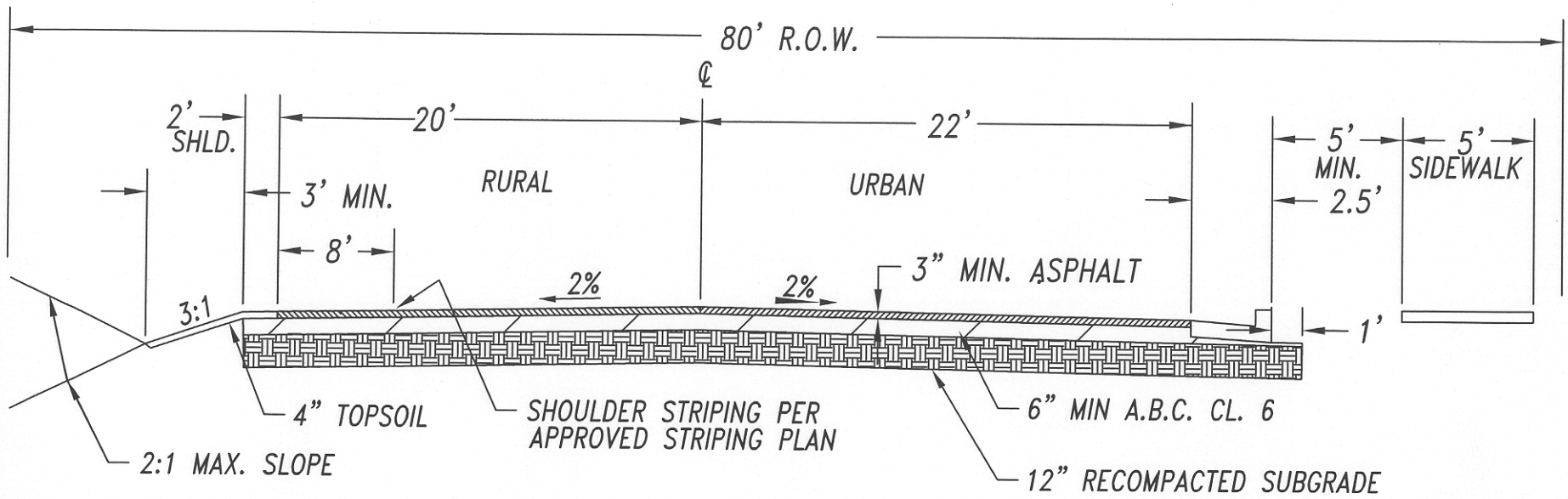

NOTES:
1. Pavement design by a professional engineer is required – see Article No. 6.
2. Full depth asphalt design allowed only with approval of Director of Public Works.
3. Depth of A.B.C. class 6 to be supported by pavement design. Depth over 6" may be class 2 A.B.C. – minimum 4" depth.

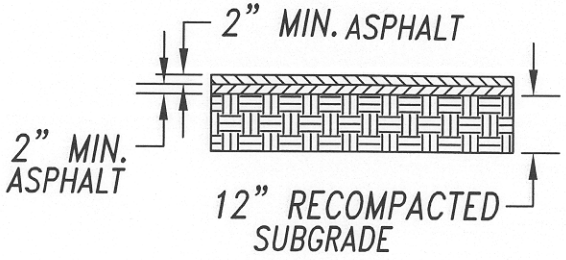

FULL DEPTH ASPHALT OPTION

MAJOR COLLECTOR		
PUEBLO COUNTY PUBLIC WORKS	APPROVED: 4-23-98 REVISED: REVISED:	FIGURE NO. 3

C:\ROADSTND\MAJ-COLL.DWG

TYPICAL X-SECTION

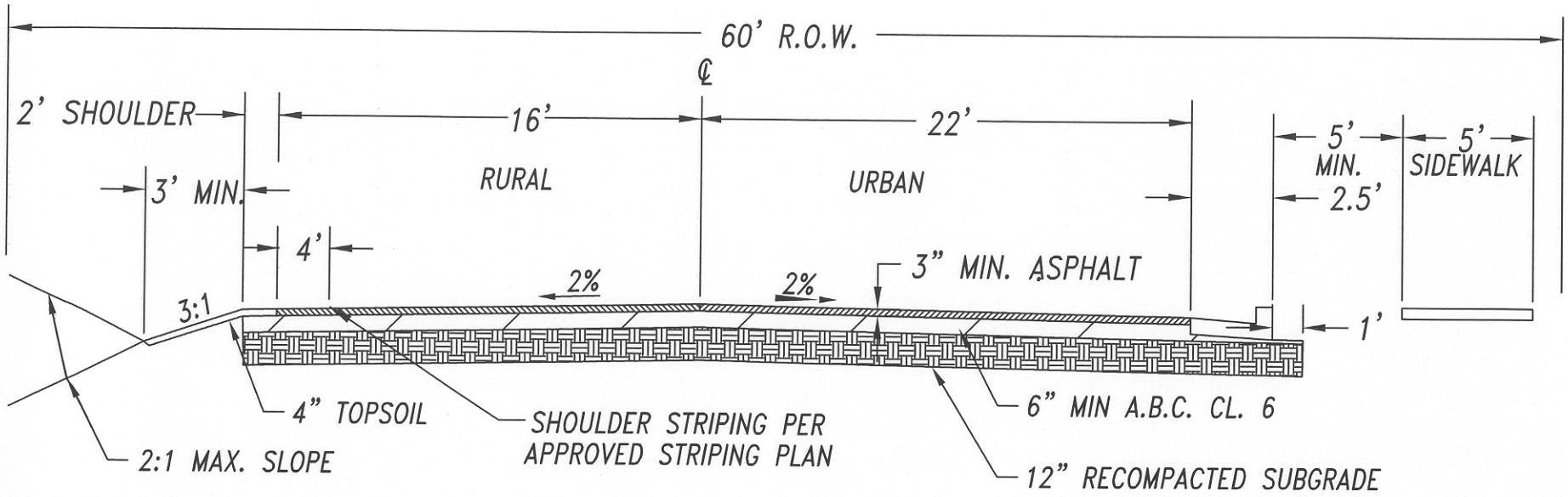

NOTES:
1. Pavement design by a professional engineer is required – see Article No. 6.
2. Full depth asphalt design allowed only with approval of Director of Public Works.
3. Depth of A.B.C. class 6 to be supported by pavement design. Depth over 6" may be class 2 A.B.C. – minimum 4" depth.

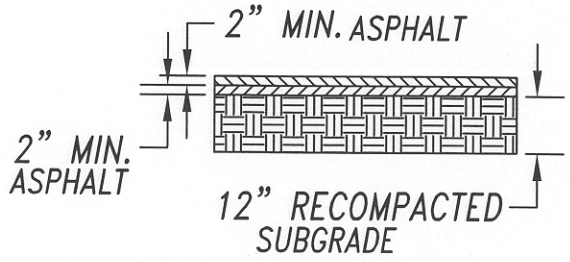

FULL DEPTH ASPHALT OPTION

MINOR COLLECTOR		
PUEBLO COUNTY PUBLIC WORKS	APPROVED: 4-23-98 REVISED: REVISED:	FIGURE NO. 4

C:\ROADSTND\MIN-COLL.DWG

TYPICAL X-SECTION

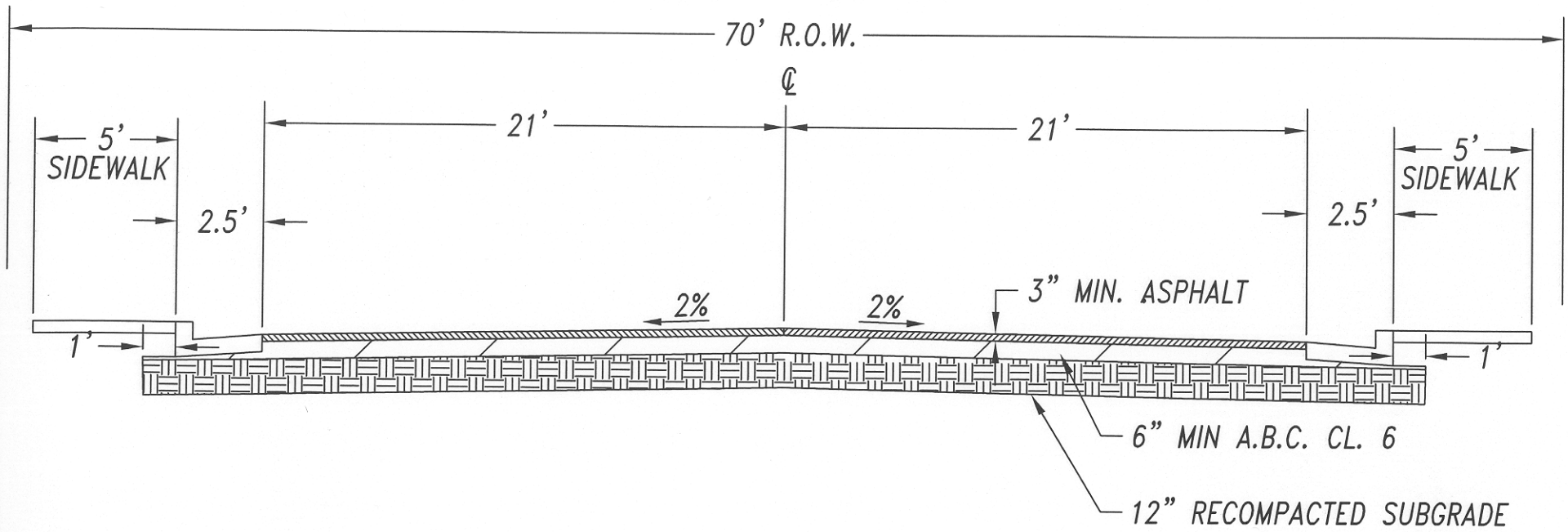

NOTES:
1. Pavement design by a professional engineer is required – see Article No. 6.
2. Full depth asphalt design allowed only with approval of Director of Public Works.
3. Depth of A.B.C. class 6 to be supported by pavement design. Depth over 6" may be class 2 A.B.C. – minimum 4" depth.

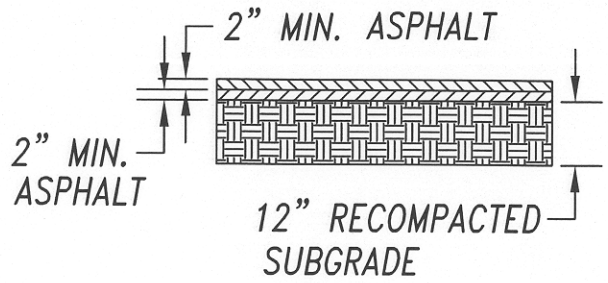

FULL DEPTH ASPHALT OPTION

LOCAL INDUSTRIAL		
PUEBLO COUNTY PUBLIC WORKS	APPROVED: 4-23-98 REVISED: REVISED:	FIGURE NO. 5

C:\ROADSTND\LOC-INDT.DWG

TYPICAL X-SECTION

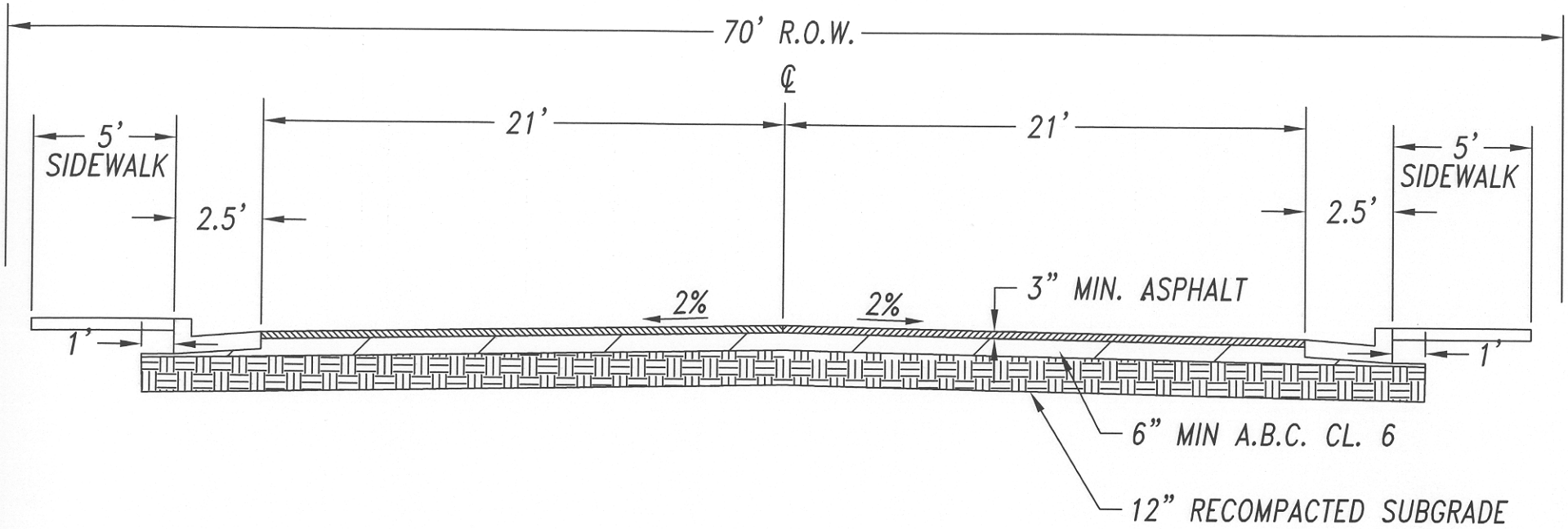

NOTES:
1. Pavement design by a professional engineer is required – see Article No. 6.
2. Full depth asphalt design allowed only with approval of Director of Public Works.
3. Depth of A.B.C. class 6 to be supported by pavement design. Depth over 6" may be class 2 A.B.C. – minimum 4" depth.

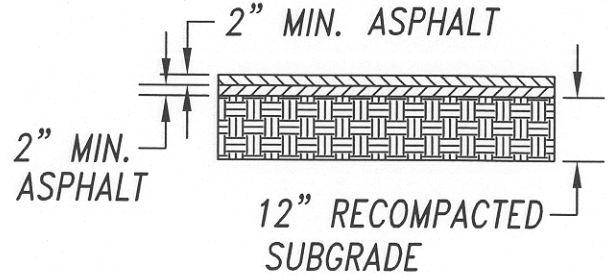

FULL DEPTH ASPHALT OPTION

LOCAL COMMERCIAL		
PUEBLO COUNTY PUBLIC WORKS	APPROVED: 4-23-98 REVISED: REVISED:	FIGURE NO. 6

C:\ROADSTND\LOC-COMM.DWG

TYPICAL X-SECTION

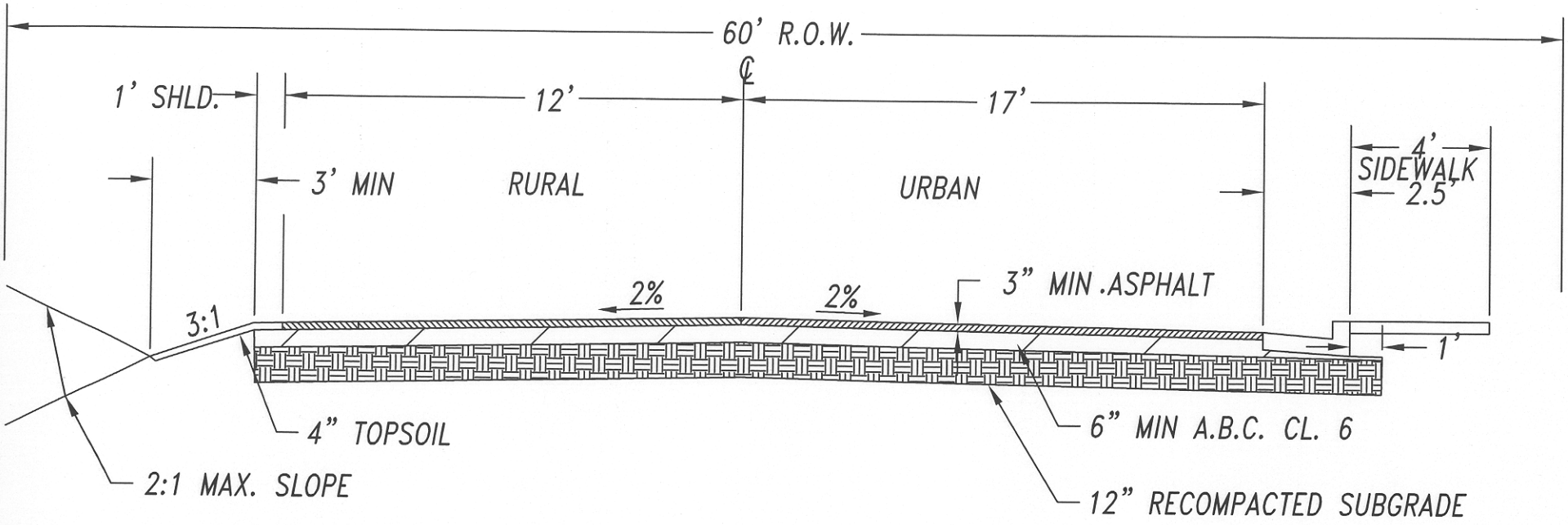

NOTES:
1. Pavement design by a professional engineer is required – see Article No. 6.
2. Full depth asphalt design allowed only with approval of Director of Public Works.
3. Narrower widths may be approved for urban section where adequate off street parking is provided and on street parking is prohibited.
4. Depth of A.B.C. class 6 to be supported by pavement design. Depth over 6" may be class 2 A.B.C. – minimum 4" depth.
5. Rural pavement width shown assumes no on street parking add minimum 4' total width where on street parking allowed.

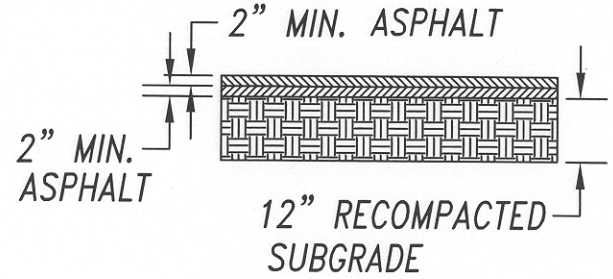

FULL DEPTH ASPHALT OPTION

LOCAL ACCESS		
PUEBLO COUNTY PUBLIC WORKS	APPROVED: 4-23-98 REVISED: REVISED:	FIGURE NO. 7

C:\ROADSTND\LOC-ACES.DWG

TYPICAL X-SECTION

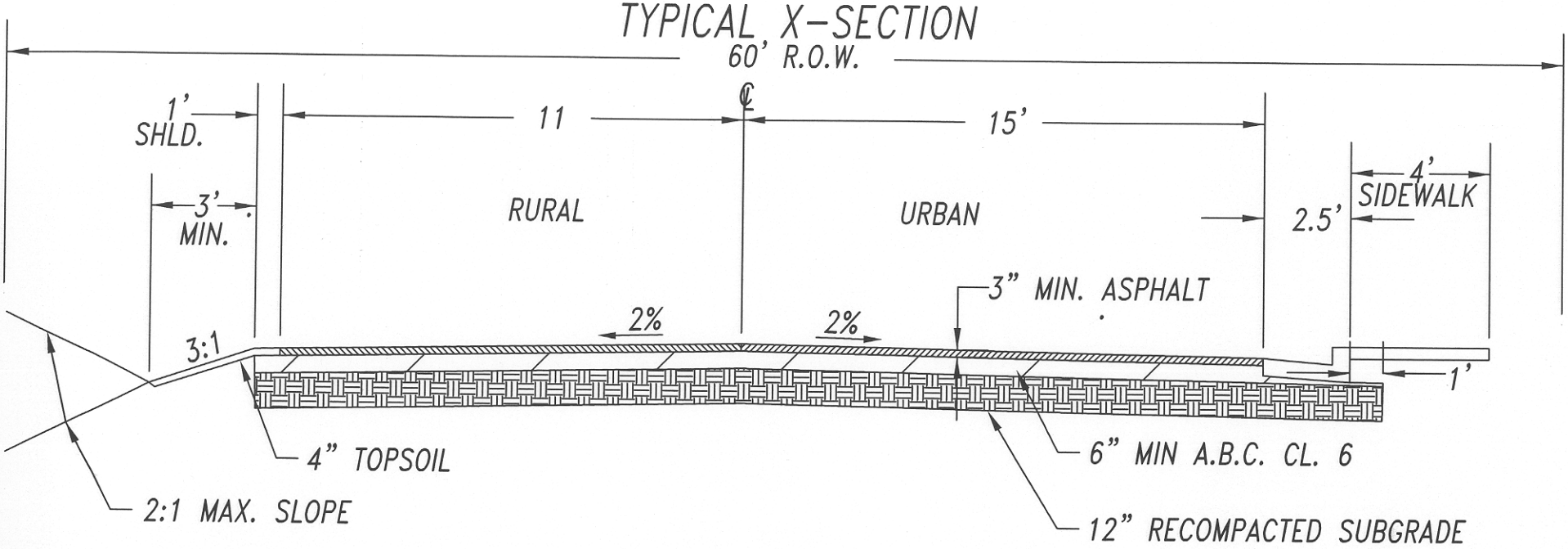

NOTES:
1. Pavement design by a professional engineer is required – see Article No. 6.
2. Full depth asphalt design allowed only with approval of Director of Public Works.
3. Narrower widths may be approved for urban section where adequate off street parking is provided and on street parking is prohibited.
4. Depth of A.B.C. class 6 to be supported by pavement design. Depth over 6" may be class 2 A.B.C. – minimum 4" depth.
5. Rural pavement width shown assumes no on street parking add minimum 4' total width where on street parking allowed.

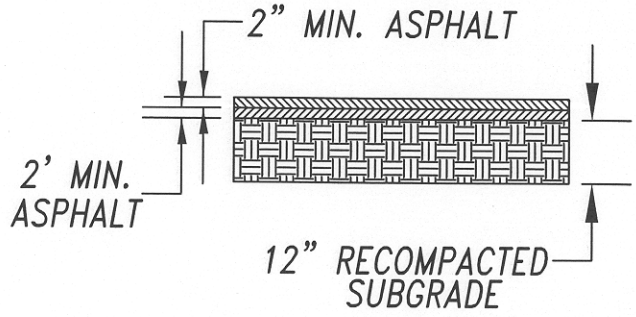

FULL DEPTH ASPHALT OPTION

LOCAL MINOR RESIDENTIAL

PUEBLO COUNTY PUBLIC WORKS	APPROVED: 4-23-98 REVISED: REVISED:	FIGURE NO. 8

C:\ROADSTND\LO-MI-RE.DWG

TYPICAL X-SECTION

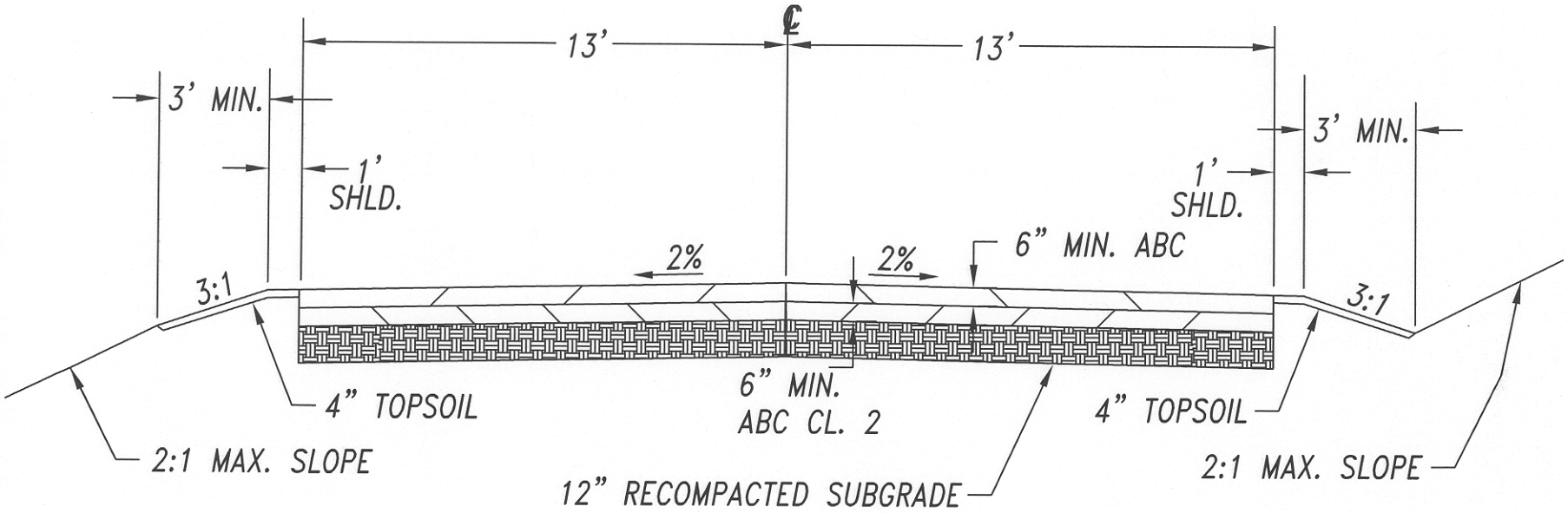

NOTES:
1. Cross section design by professional engineer is required – see Article No. 6.
2. Depth of class 6 A.B.C., class 2 A.B.C., to be supported by cross section design.
3. Surface aggregate base course (A.B.C.) to be per Pueblo County specifications – see Article No. 8.9

LOCAL MINOR RESIDENTIAL – GRAVEL		
PUEBLO COUNTY PUBLIC WORKS	APPROVED: 4-23-98 REVISED: REVISED:	FIGURE NO. 9

C:\ROADSTND\LMR-GRAV.DWG

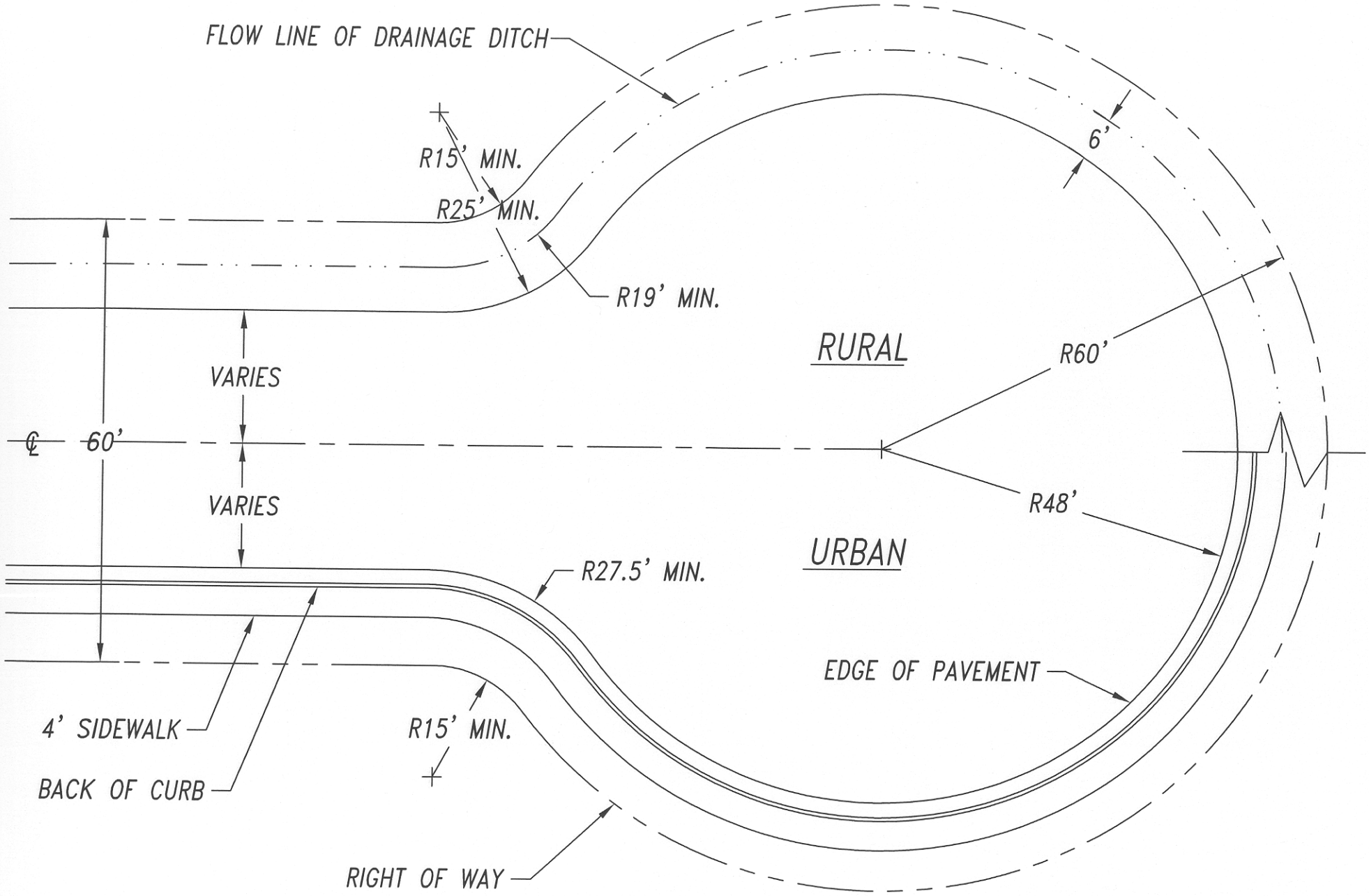

CUL-DE-SAC DETAIL

PUEBLO COUNTY PUBLIC WORKS	APPROVED: 4-23-98 REVISED: REVISED:	FIGURE NO. 10

C:\ROADSTND\CULDESAC.DWG

TYPES OF VERTICAL CURVES

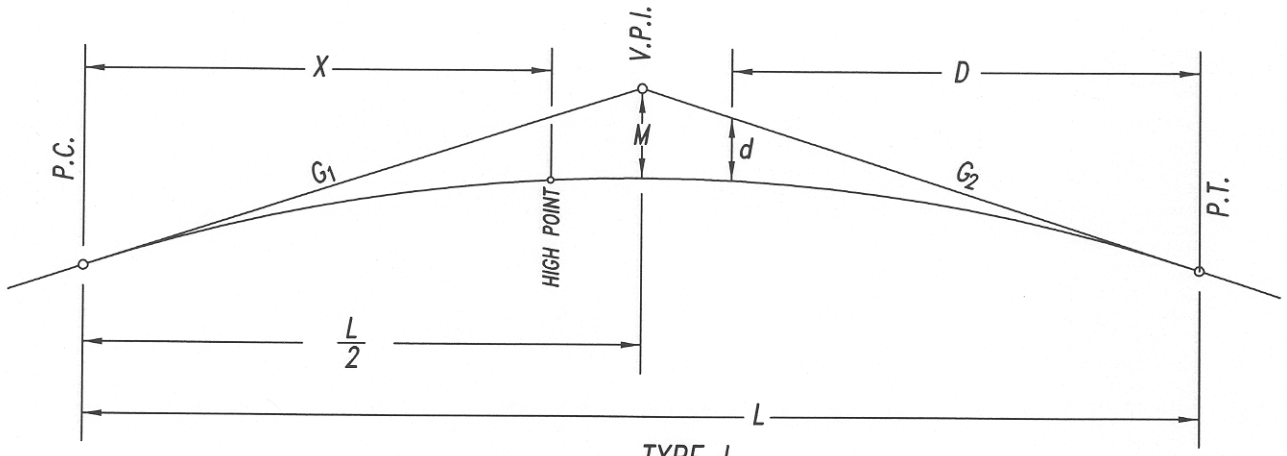

TYPE I

CREST VERTICAL CURVE

G1 & G2 = GRADES IN FT. PER 100 FT.

L = LENGTH OF CURVE IN STATIONS

$$d = 4M\left(\frac{D}{L}\right)^2 \quad \text{OR} \quad d = \frac{\text{ALGEBRAIC DIFF. } X\ D^2}{2L}$$

$$M = \frac{L\ (\text{ALGEBRAIC DIFFERENCE IN GRADES})}{8}$$

TO DETERMINE HIGH POINT (OR LOW POINT ON SAG VERTICAL)

USE THE FOLLOWING: $X = \dfrac{G \times L}{\text{ALG. DIFF. IN GRADES}}$

WHERE X IS THE DISTANCE FROM THE P.C. OF THE CURVE IN STATIONS.

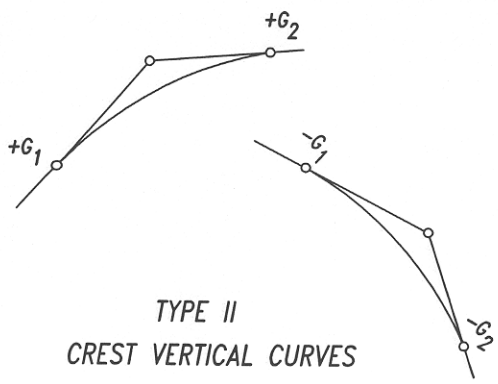

TYPE II

CREST VERTICAL CURVES

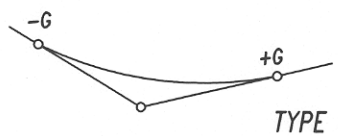

TYPE III

SAG VERTICAL CURVES

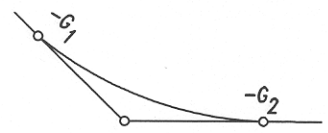

TYPE IV

SAG VERTICAL CURVES

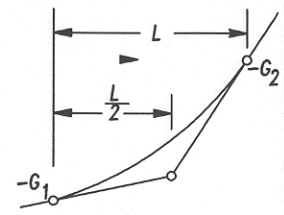

VERTICAL CURVES

PUEBLO COUNTY PUBLIC WORKS	APPROVED: 4-23-98 REVISED: REVISED:	FIGURE NO. 11

C:\ROADSTND\VER-CURV.DWG

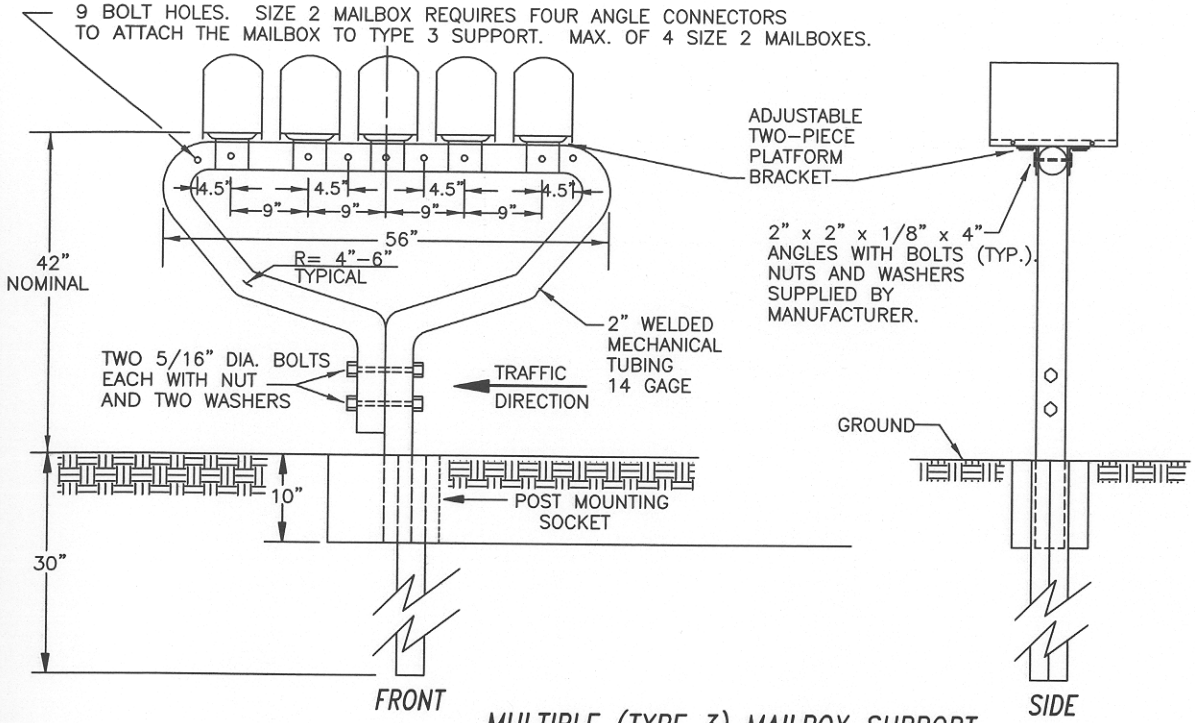

MULTIPLE (TYPE 3) MAILBOX SUPPORT

(FORESIGHT PRODUCTS MODEL NO. 20-M OR APPROVED EQUAL)

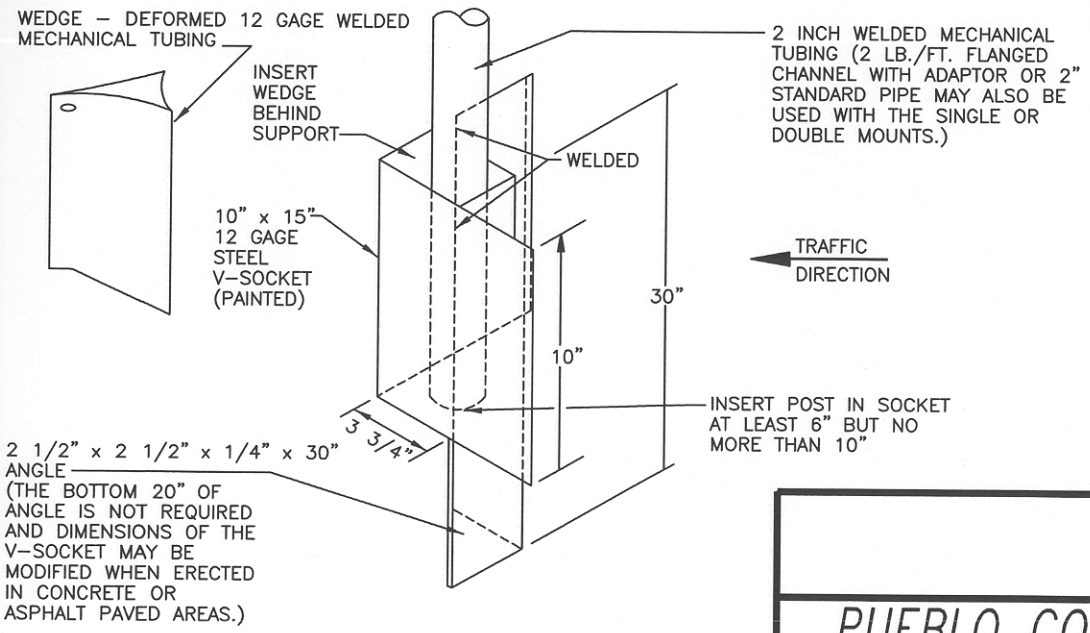

POST MOUNTING SOCKET

GENERAL NOTES

POSTS, BRACKETS, AND ALL MOUNTING HARDWARE SHALL BE GALVANIZED IN ACCORDANCE WITH AASHTO M 232 AND M 111, EXCEPT THE WELDED MECHANICAL TUBING COATING SHALL BE G-90 OR EQUIVALENT PER ASTM A 525. TWO INCH OUTSIDE DIAMETER, 14 GAGE WELDED MECHANICAL TUBING SHALL CONFORM TO THE REQUIREMENTS OF ASTM A 513.

EXACT DIMENSIONS OF ANGLES, PLATFORM AND SHELF BRACKETS. BOLT HOLES, SLOTS AND MULTIPLE MAILBOX SUPPORT COMPONENENTS MAY VARY FROM THOSE SHOWN OR IMPLIED HEREIN SO THAT ALL COMPONENTS WILL FIT TOGETHER PROPERLY.

PLASTIC NEWSPAPER RECEPTACLES MAY BE REMOUNTED BELOW THE MAILBOX ON THE SUPPORT.

ON ROADS WITH CURB AND GUTTER, THE MAILBOX SUPPORT SHALL BE LOCATED IN THE GROUND SO THE FRONT OF THE MAILBOX SHALL BE 8" TO 12" BACK FROM THE CURB FACE. THE HEIGHT SHALL BE 42" TO 48" MEASURED FROM THE GUTTER FLOW LINE TO THE BOTTOM OF THE MAILBOX.

ON ROADS WITH SIDEWALK ATTACHED TO CURB AND GUTTER, THE MAILBOX SUPPORT SHALL BE LOCATED IN THE GROUND BEHIND THE SIDEWALK. THE FRONT OF THE MAILBOX SHALL BE IN LINE WITH OR SLIGHTLY BEHIND THE EDGE OF THE SIDEWALK. THE MOUNTING HEIGHT SHALL BE 42" TO 48" ABOVE THE SIDEWALK.

THE GROUND SURROUNDING THE MAILBOX SUPPORTS SHALL BE FIRM. UNDISTURBED GROUND, OR WELL COMPACTED REGRADED SOIL. THE SUPPORTS ARE NORMALLY DRIVEN, BUT THEY MAY BE PLACED IN A DUG HOLE WITH WELL COMPACTED BACKFILL.

MAILBOX SUPPORTS

PUEBLO COUNTY PUBLIC WORKS	APPROVED: 4-23-98 REVISED: REVISED:	FIGURE NO. 12A

C:\ROADSTND\MBOX-SUP.DWG

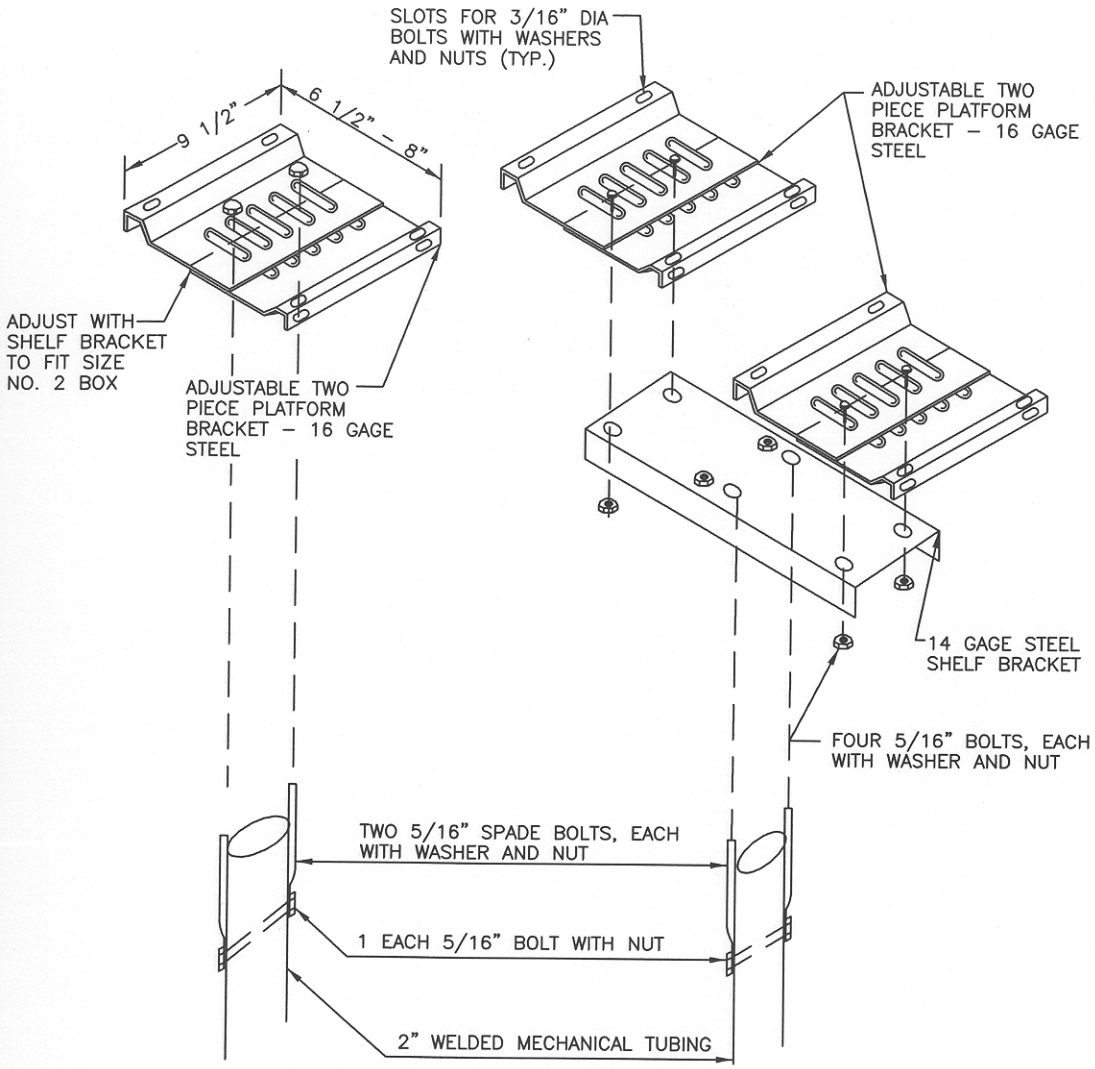

SINGLE AND DOUBLE MAILBOX SUPPORTS ALTERNATIVE

(FORESIGHT PRODUCTS MODEL NOS. 20-S OR 20-D)

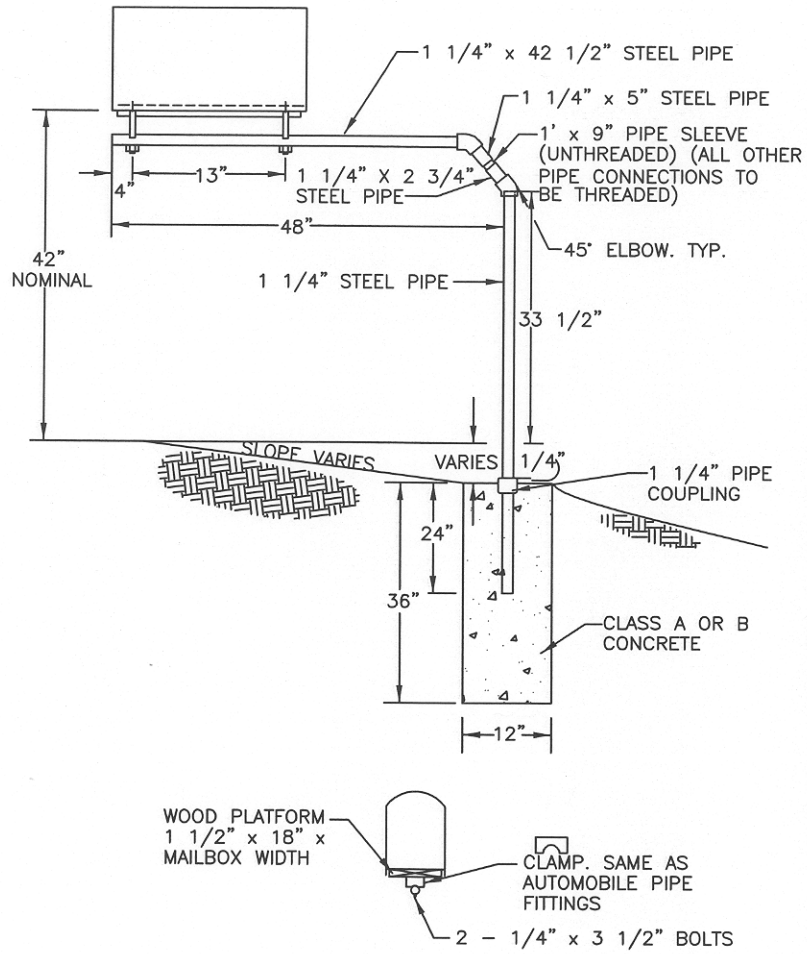

CANTILEVER (TYPE 4) MAILBOX SUPPORT

MAILBOX SUPPORTS

PUEBLO COUNTY PUBLIC WORKS	APPROVED: 4-23-98 REVISED: REVISED:	FIGURE NO. 12B

C:\ROADSTND\BOX-SUPB.DWG

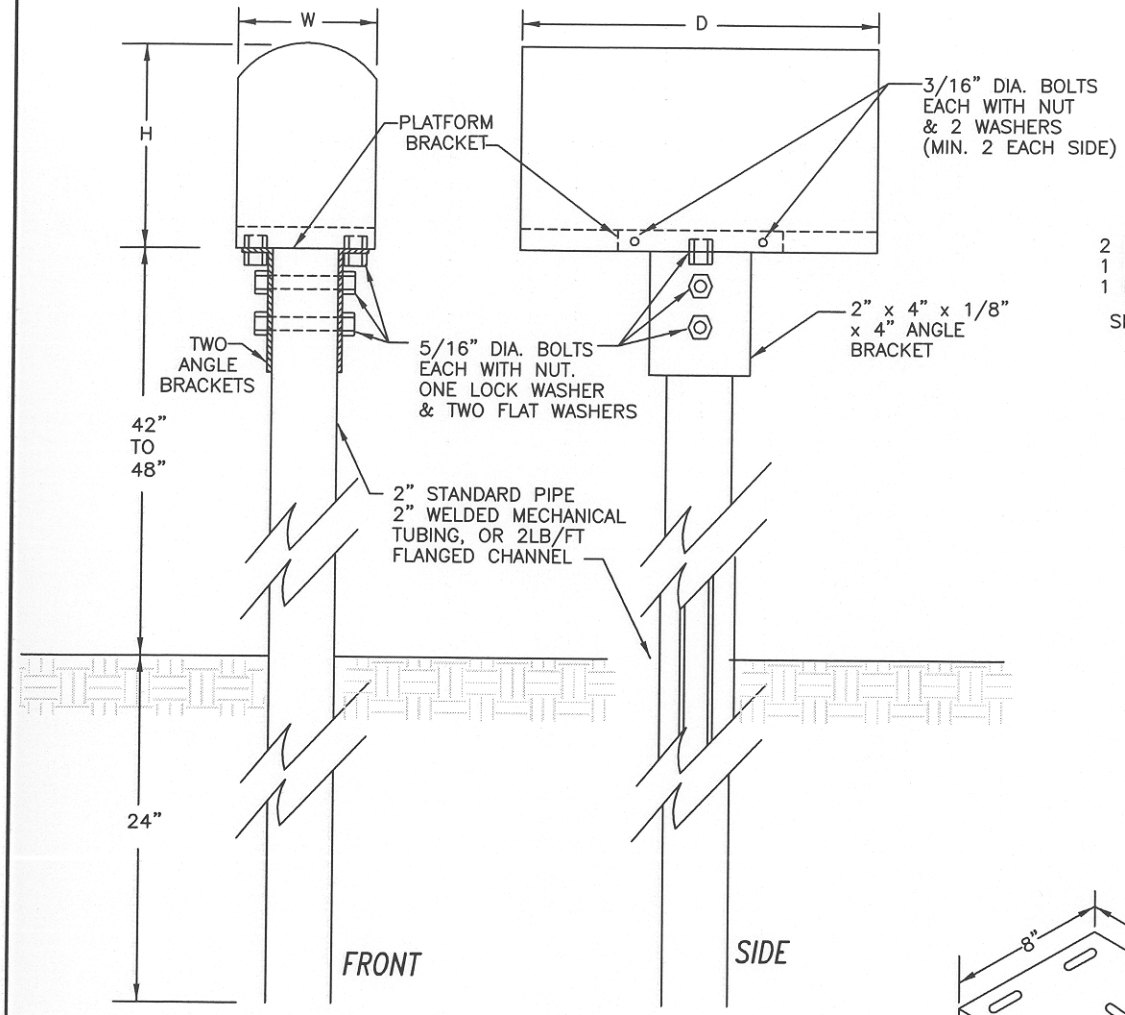

SINGLE (TYPE 1) AND DOUBLE (TYPE 2) MAILBOX SUPPORTS

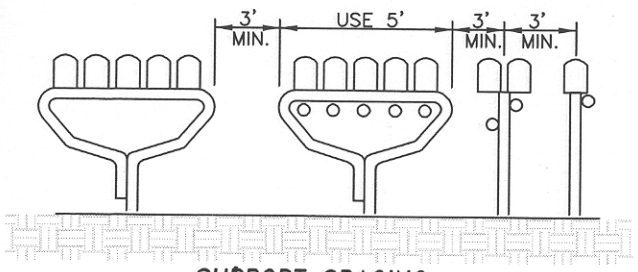

SUPPORT SPACING

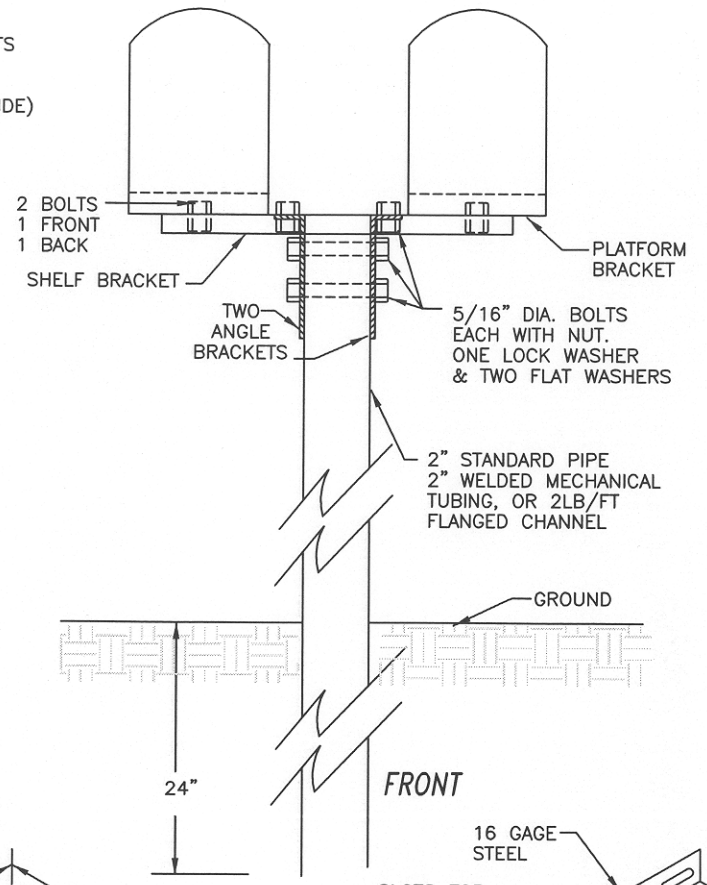

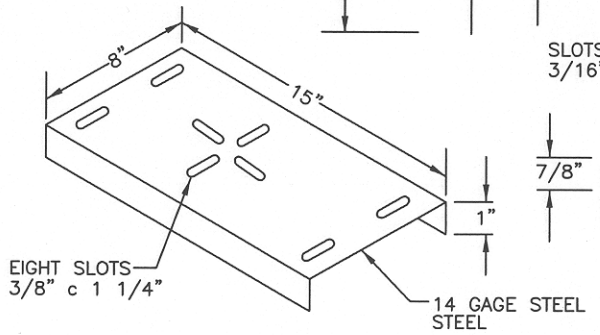

SHELF BRACKET

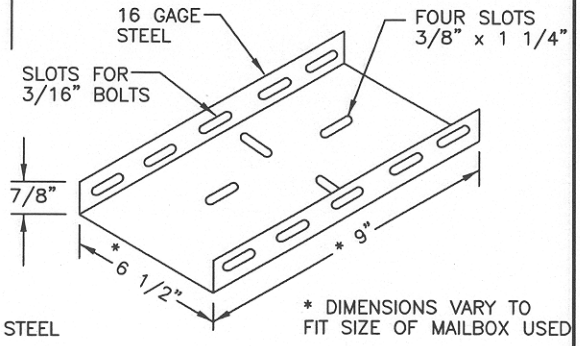

PLATFORM BRACKET

MAILBOX SUPPORTS

PUEBLO COUNTY PUBLIC WORKS	APPROVED: 4-23-98 REVISED: REVISED:	FIGURE NO. 13

C:\ROADSTND\BOX-SUPC.DWG

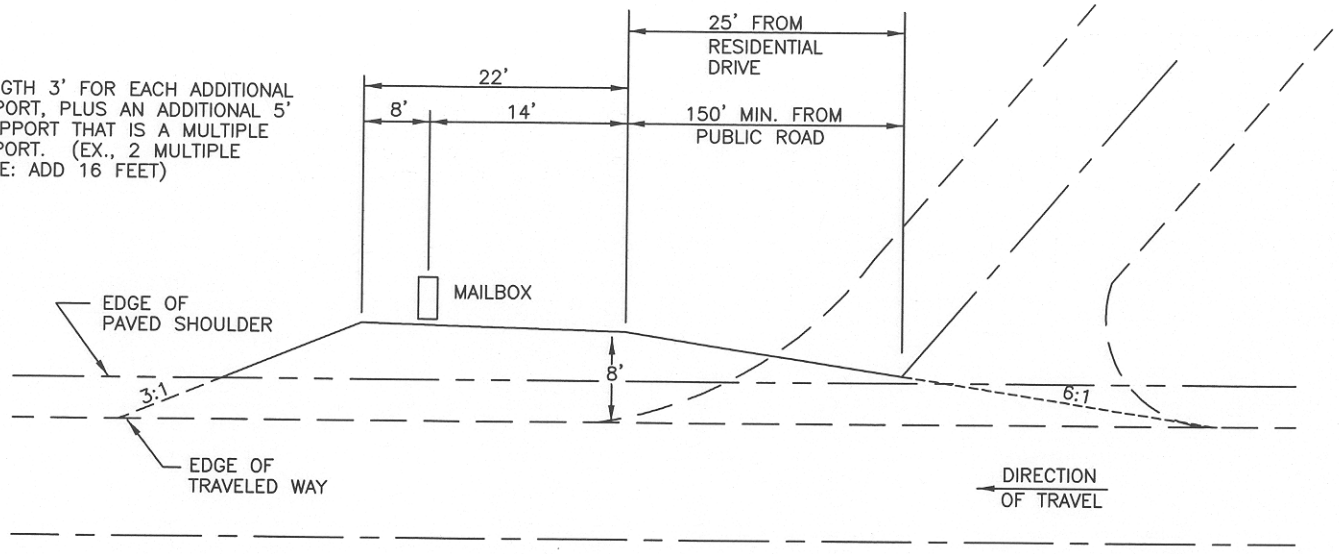

MAILBOX TURNOUT

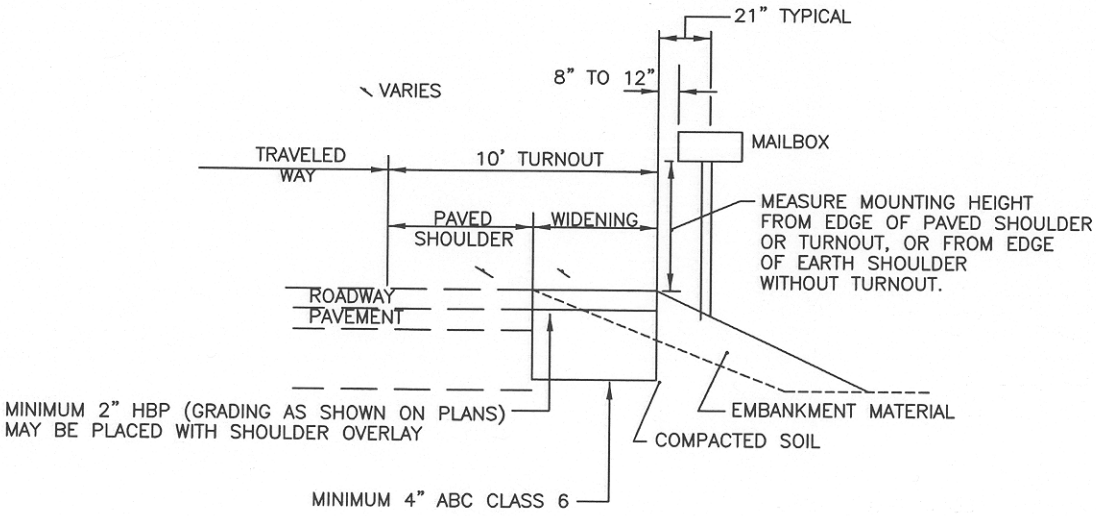

TURNOUT TYPICAL SECTION

MAILBOX TURNOUTS – ROAD ADT ≥2000		
PUEBLO COUNTY PUBLIC WORKS	APPROVED: 4-23-98 REVISED: REVISED:	FIGURE NO. 14

C:\ROADSTND\BOX-SUPD.DWG

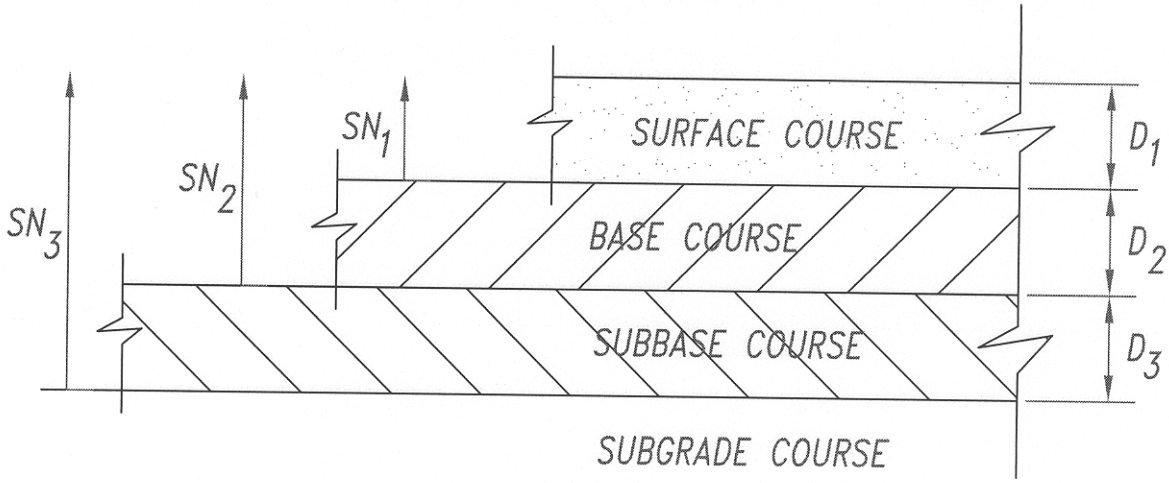

$$D^*_1 \geq \frac{SN_1}{a_1}$$

$$SN^*_1 = a_1 D^*_1 \geq SN_1$$

$$D^*_2 \geq \frac{SN_2 - SN^*_1}{a_2 m_2}$$

$$SN^*_1 + SN^*_2 \geq SN_2$$

$$D^*_3 \geq \frac{SN_3 - (SN^*_1 + SN^*_2)}{a_3 m_3}$$

1) Where a_i is the structural layer coefficient for each material, m_i is drainage related adjustment per sec. 6.3e

2) An asterisk with D or SN indicates that it represents the value actually used, which must be equal to or greater than the required value.

PUEBLO COUNTY PUBLIC WORKS	APPROVED: _____ REVISED: _____ REVISED: _____	FIGURE NO.

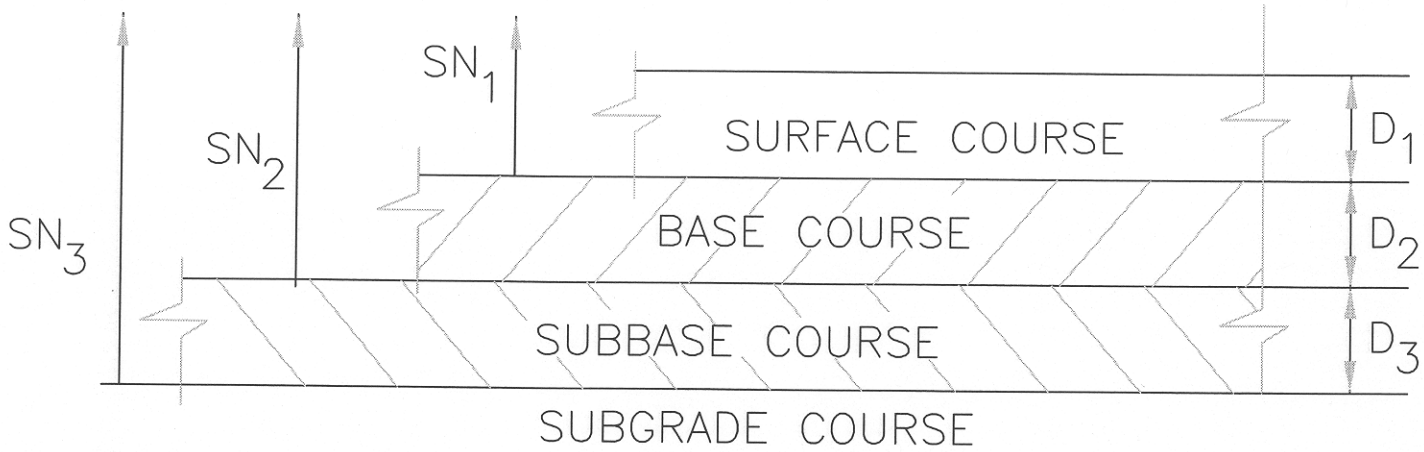

$$D^*_1 \geq \frac{SN_1}{a_1}$$

$$SN^*_1 = a_1 D^*_1 \geq SN_1$$

$$D^*_2 \geq \frac{SN_2 - SN^*_1}{a_2 m_2}$$

$$SN^*_1 + SN^*_2 \geq SN_2$$

$$D^*_3 \geq \frac{SN_3 - (SN^*_1 + SN^*_2)}{a_3 m_3}$$

1) Where a_i is the structural layer coefficient for each material, m_i is drainage related adjustment per sec. 6.3e

2) An asterisk with D or SN indicates that it represents the value actually used, which must be equal to or greater than the required value.

LAYERED PAVEMENT DESIGN

PUEBLO COUNTY PUBLIC WORKS	APPROVED: 4-23-98 REVISED: REVISED:	FIGURE NO. 15

C:\ROADSTND\LAYER.DWG

NOMOGRAPH SOLVES:

$$\log_{10} 18^{K}ESAL = Z_R * S_O + 9.36 * \log_{10}(SN+1) - 0.20 + \frac{\log_{10}\left[\frac{\Delta PSI}{4.2-1.5}\right]}{0.40 + \frac{1094}{(SN+1)^{5.19}}} + 2.32 * \log_{10} M_R - 8.07$$

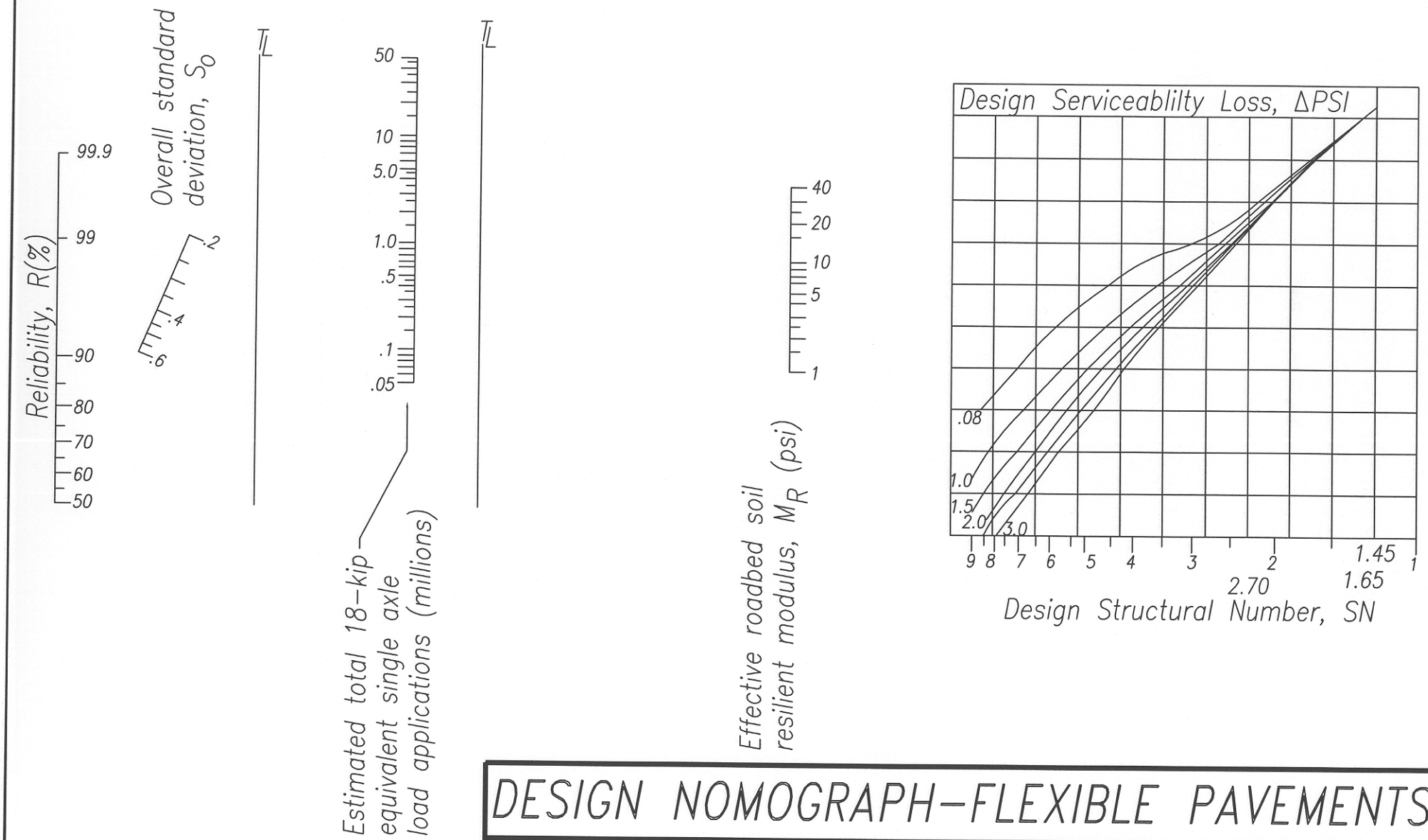

DESIGN NOMOGRAPH–FLEXIBLE PAVEMENTS

PUEBLO COUNTY PUBLIC WORKS	APPROVED: 4-23-98 REVISED: REVISED:	FIGURE NO. 16

C:\ROADSTND\FLEX-PAV.DWG

Evaluation of soils and pavement structure materials

Tests, material components and terms involved in the evaluation of flexible pavement design are as follows.

COMPONENT	TEST	TERM
Roadbed Soil	Resilient Modulus M_R	P.S.I.
Subbase	Hveem stability	R
Base Course	Hveem stability	R
Plant Mix Bituminous Base (PMBB)	Elastic modulus E_{AC}	P.S.I.
Hot Bituminous Pavement (HBP)	Elastic modulus E_{AC}	P.S.I.
Plant Mixed Seal (PMS)	Elastic modulas E_{AC}	P.S.I.

Correlation of resistance values to soil support values is shown below.

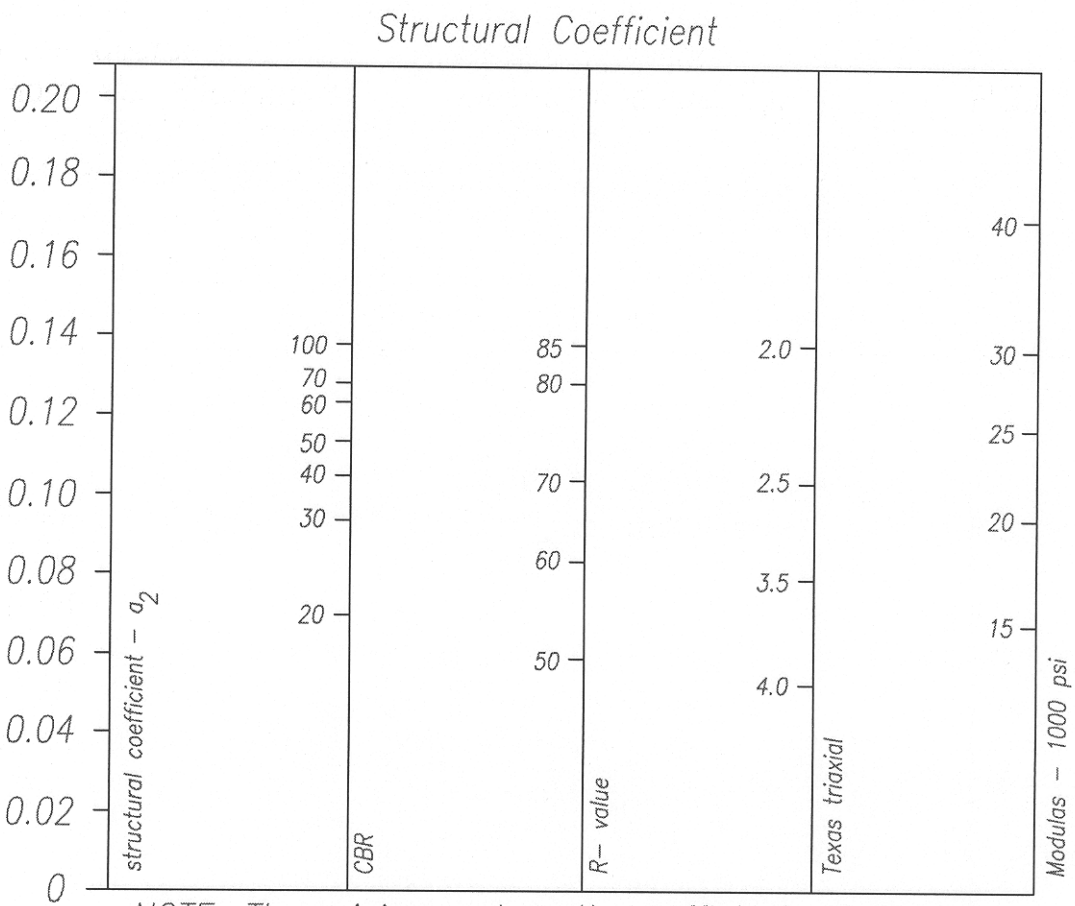

NOTE: The minimun strength coefficient of the base course on highways having a current ADT volume of 750 or greater shall be 0.12

PUEBLO COUNTY PUBLIC WORKS	APPROVED: _____ REVISED: _____ REVISED: _____	FIGURE NO.

Evaluation of soils and pavement structure materials

Tests, material components and terms involved in the evaluation of flexible pavement design are as follows.

COMPONENT	TEST	TERM
Roadbed Soil	Resilient Modulus M_R	P.S.I.
Subbase	Hveem stability	R
Base Course	Hveem stability	R
Plant Mix Bituminous Base (PMBB)	Elastic modulus E_{AC}	P.S.I.
Hot Bituminous Pavement (HBP)	Elastic modulus E_{AC}	P.S.I.
Plant Mixed Seal (PMS)	Elastic modulus E_{AC}	P.S.I.

Correlation of resistance values to soil support values is shown to the right.

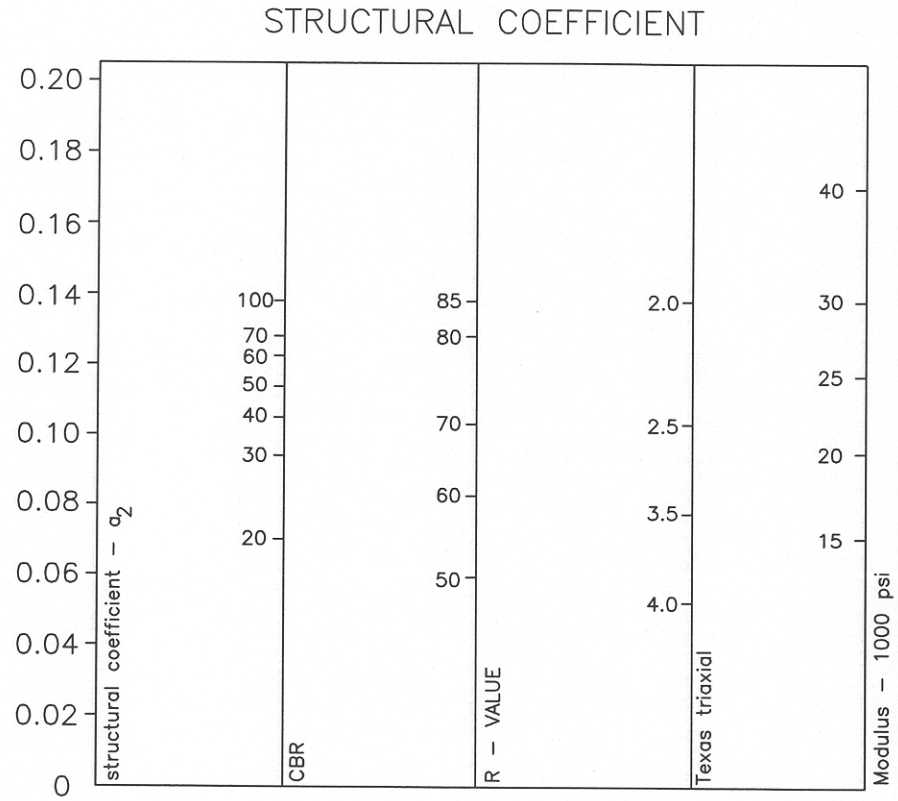

NOTE: The minmum strength coefficient of the base course on highways having a current ADT volume of 750 or greater shall be 0.12

SOIL SUPPORT VALUES

PUEBLO COUNTY
PUBLIC WORKS

APPROVED: 4-23-98
REVISED:
REVISED:

FIGURE NO. 17

C:\ROADSTND\SOIL-SUP.DWG

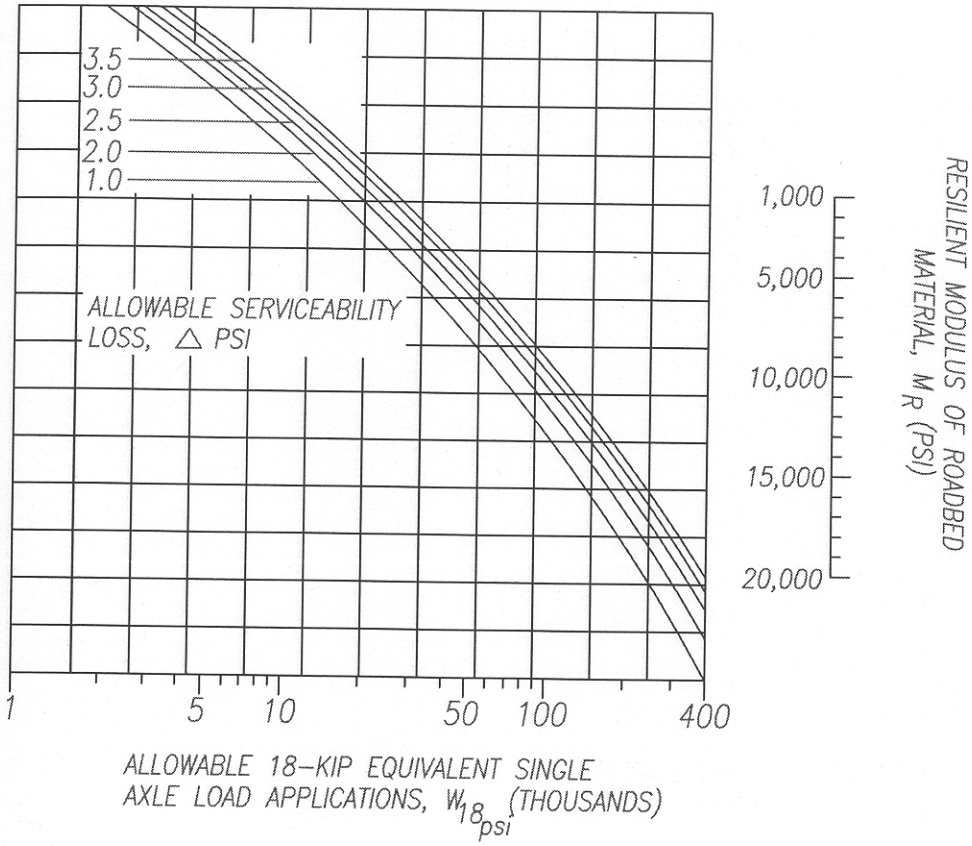
3.5
3.0
2.5
2.0
1.0
ALLOWABLE SERVICEABILITY LOSS, △ PSI
1
5
10
50
100
400
ALLOWABLE 18-KIP EQUIVALENT SINGLE AXLE LOAD APPLICATIONS, $W_{18_{psi}}$ (THOUSANDS)
1,000
5,000
10,000
15,000
20,000
RESILIENT MODULUS OF ROADBED MATERIAL, M_R (PSI)

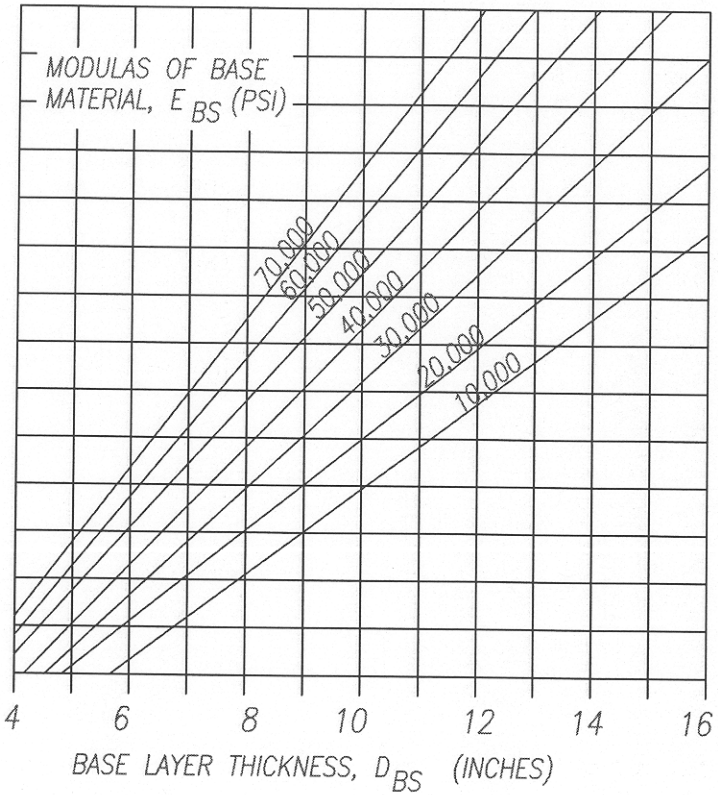
MODULAS OF BASE MATERIAL, E_{BS} (PSI)
70,000
60,000
50,000
40,000
30,000
20,000
10,000
4
6
8
10
12
14
16
BASE LAYER THICKNESS, D_{BS} (INCHES)

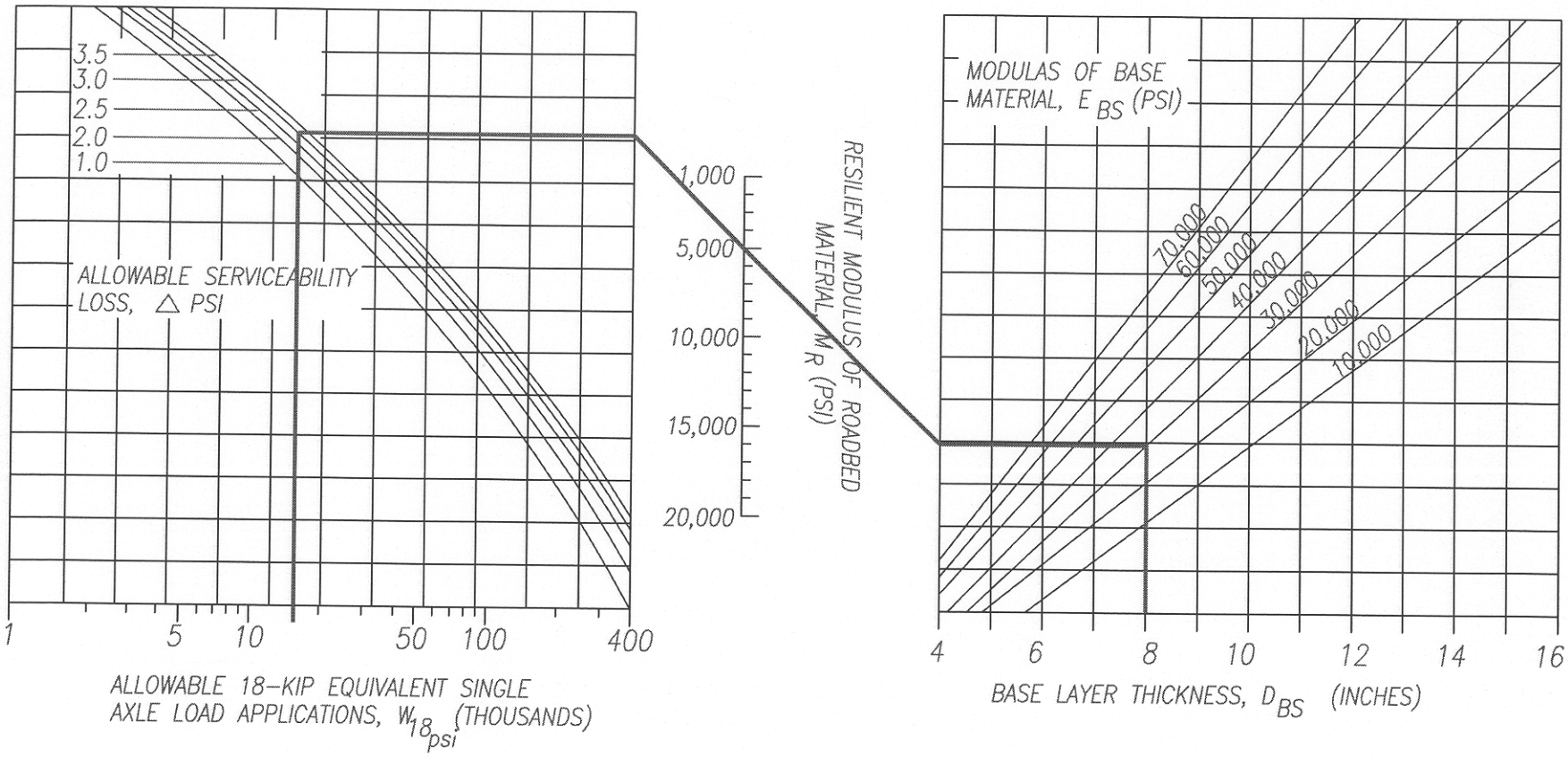
3.5
3.0
2.5
2.0
1.0
ALLOWABLE SERVICEABILITY LOSS, △ PSI
1
5
10
50
100
400
ALLOWABLE 18-KIP EQUIVALENT SINGLE AXLE LOAD APPLICATIONS, $W_{18_{psi}}$ (THOUSANDS)
1,000
5,000
10,000
15,000
20,000
RESILIENT MODULUS OF ROADBED MATERIAL, M_R (PSI)
MODULAS OF BASE MATERIAL, E_{BS} (PSI)
70,000
60,000
50,000
40,000
30,000
20,000
10,000
4
6
8
10
12
14
16
BASE LAYER THICKNESS, D_{BS} (INCHES)

Allowable 18 kip equivalent single axle load applications, $W_{18}RUT$ (thousands)
400
100
50
10
5
1
Modulus of aggregate base layer, E_{BS} (psi)
70,000
60,000
50,000
40,000
30,000
20,000
10,000
T_L
Resilient modulus of roadbed material, M_R (psi)
1,000
5,000
10,000
20,000
T_L
Allowable rut depth, RD (inches)
3.0
2.0
1.0
.5
4
5
6
7
8
9
10
11
12
13
14
15
16
Thickness of aggregate base layer considered for rutting criteria, D_{BS} (inches)

Allowable 18 kip equivalent single axle load applications, $W_{18}RUT$ (thousands)
400
100
50
10
5
1
Modulas of aggregate base layer, E_{BS} (psi)
70,000
60,000
50,000
40,000
30,000
20,000
10,000
T_L
Resilient modulas of roadbed material, M_R (psi)
1,000
5,000
10,000
20,000
T_L
Allowable rut depth, RD (inches)
3.0
2.0
1.0
.5
4
5
6
7
8
9
10
11
12
13
14
15
16
Thickness of aggregate base layer considered for rutting criteria, D_{BS} (inches)

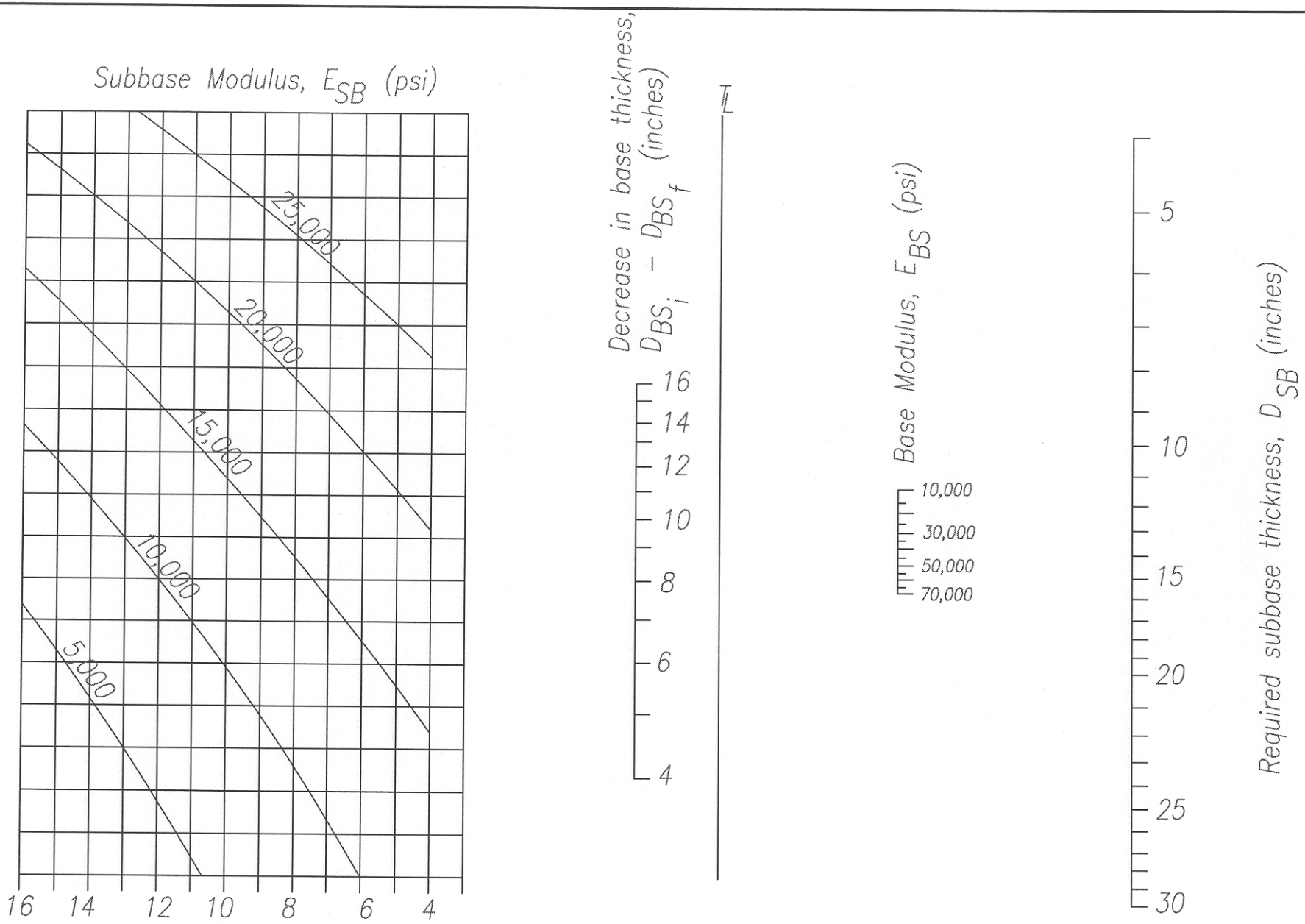

EQUIVALENT THICKNESS – SUBBASE VS. BASE

PUEBLO COUNTY PUBLIC WORKS	APPROVED: _____ REVISED: _____ REVISED: _____	FIGURE NO. 20

C:\ROADSTND\SUB-BASE.DWG

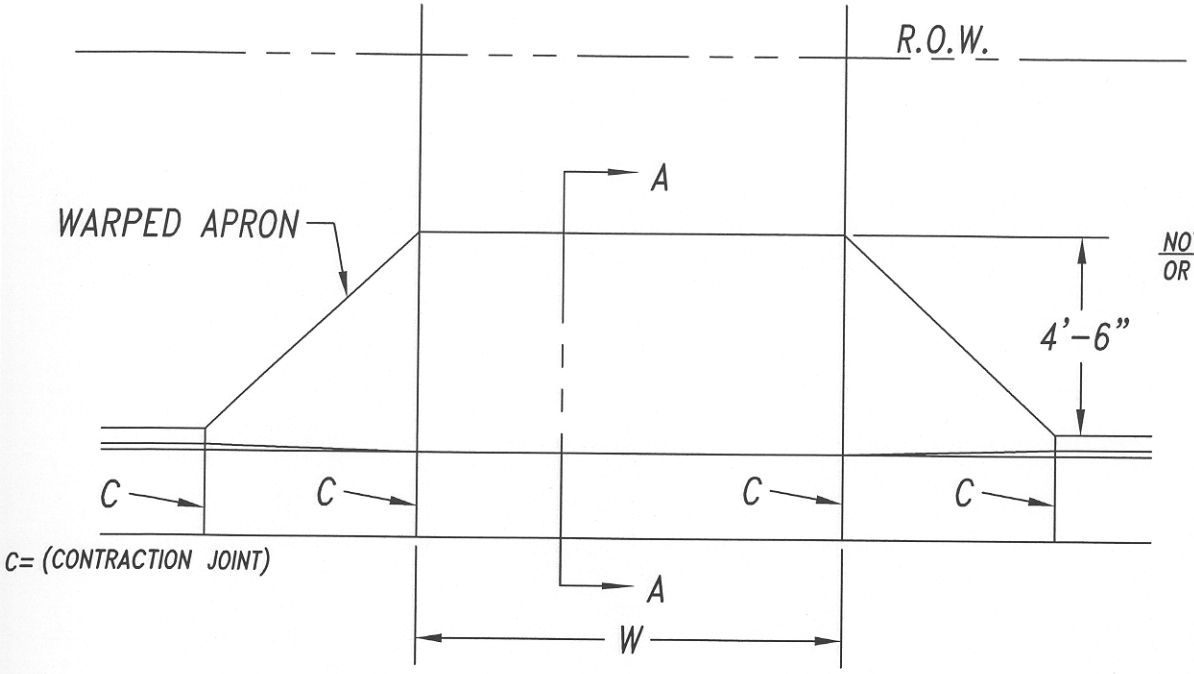

PLAN

NOTE: CONCRETE SHALL EXTEND 4'-6" OR TO BACK OF SIDEWALK (IF PRESENT)

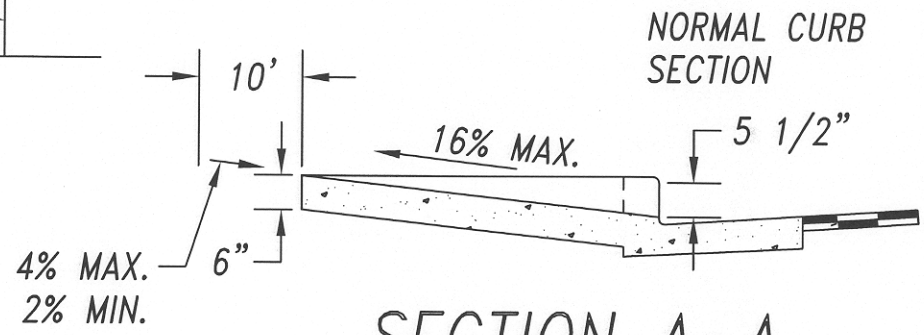

SECTION A-A

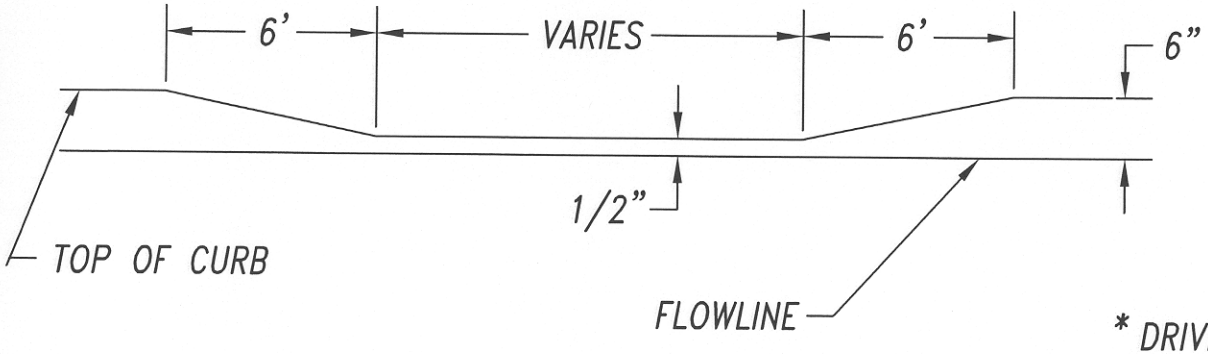

TYPICAL CURB CUT SECTION

URBAN DRIVEWAY WIDTHS		
	MIN.	MAX.
RESIDENTIAL	12'	20'
COMMERCIAL	20'	30'*

* DRIVES OVER 30' MAY REQUIRE CONSTRUCTION AS A ROAD APPROACH WITH CURB RETURNS AND CROSS PAN.

URBAN DRIVEWAYS

PUEBLO COUNTY PUBLIC WORKS

APPROVED: 4-23-98
REVISED:
REVISED:

FIGURE NO. 21

C:\ROADSTND\URBDRIVE.DWG

RURAL DRIVEWAY WIDTHS

USE	W, MIN.	W, MAX.
RESIDENTIAL	12'	18'
MULTI-FAMILY RESIDENCE	16'	24'
COMMERCIAL	16'	24'
INDUSTRIAL	24'	30'
AGRICULTURAL	16'	30'

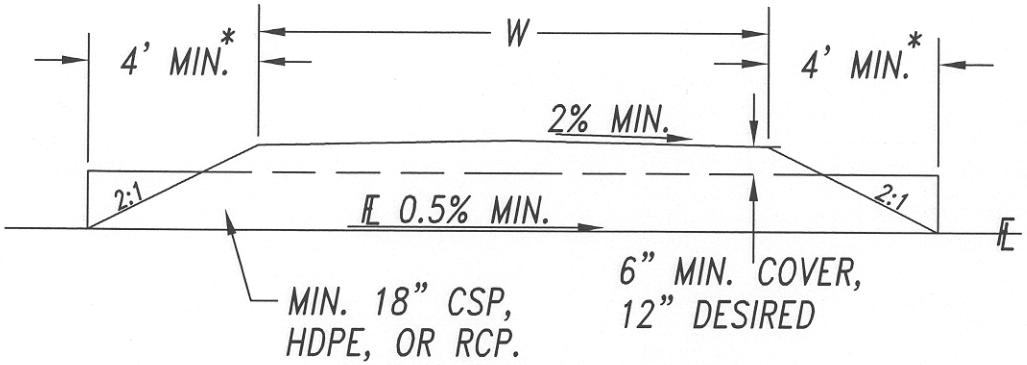

SECTION A-A

*SEE FIGURES 25 & 26 FOR END TREATMENT DETAILS

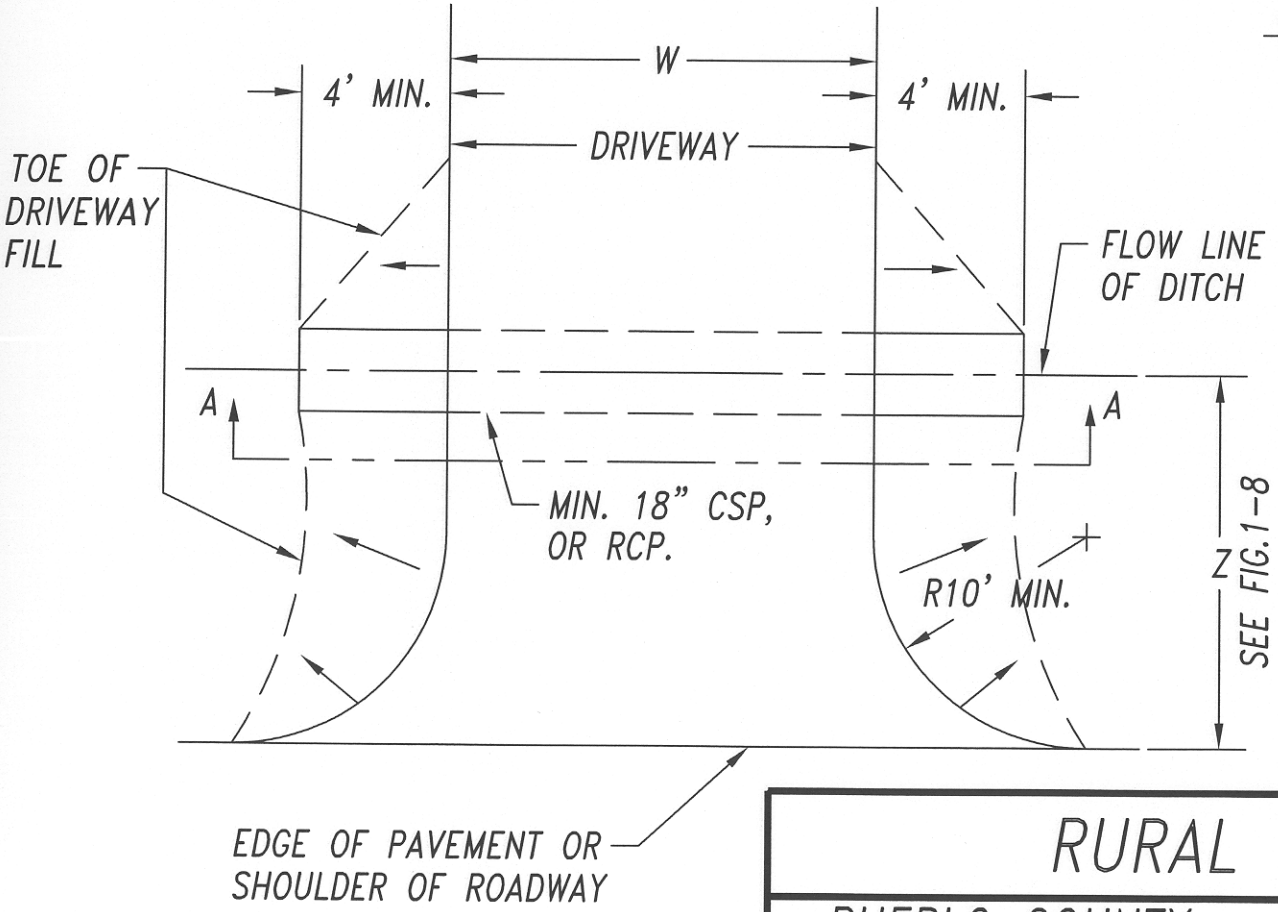

NOTES:

1. For driveways along paved roadways, the driveway shall be paved from the roadway edge to the property line with grade C H.B.P., min. 4" depth.
2. For driveways along gravel roadways, the driveway shall be capped from the roadway edge to the property line with class 6 A.B.C., min. 9" depth.

RURAL DRIVEWAYS

PUEBLO COUNTY PUBLIC WORKS	APPROVED: 4-23-98 REVISED: REVISED:	FIGURE NO. 22

C:\ROADSTND\RURDRIVE.DWG

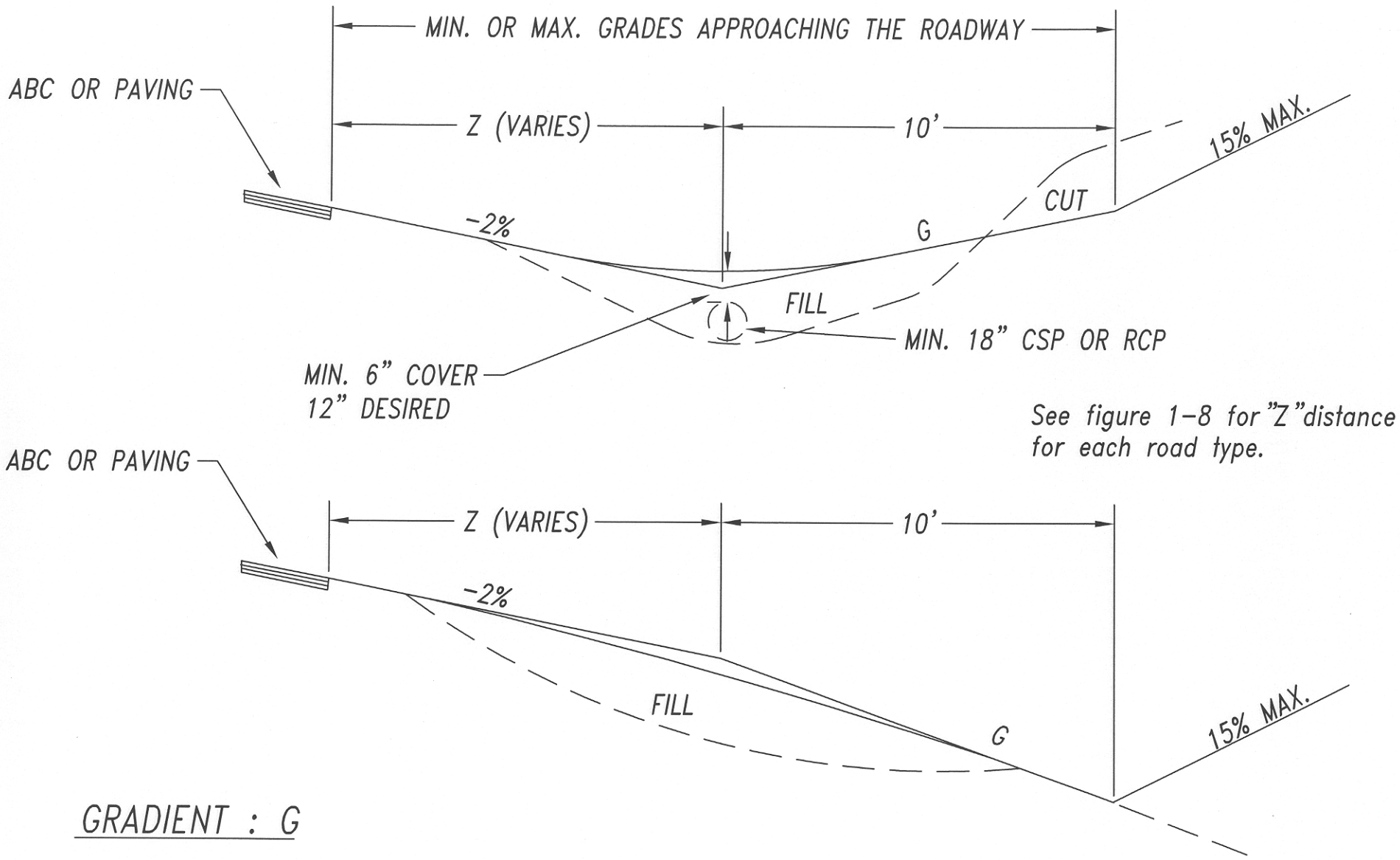

See figure 1-8 for "Z" distance for each road type.

GRADIENT : G

Commercial 2% min. to 8% max.
Industrial 2% min. to 5% max.
Residential 2% min. to 15% max.
Agricultural 2% min. to 15% max.

RURAL DRIVEWAY PROFILES

PUEBLO COUNTY PUBLIC WORKS	APPROVED: 4-23-98 REVISED: REVISED:	FIGURE NO. 23

C:\ROADSTND\RURDRPFL.DWG

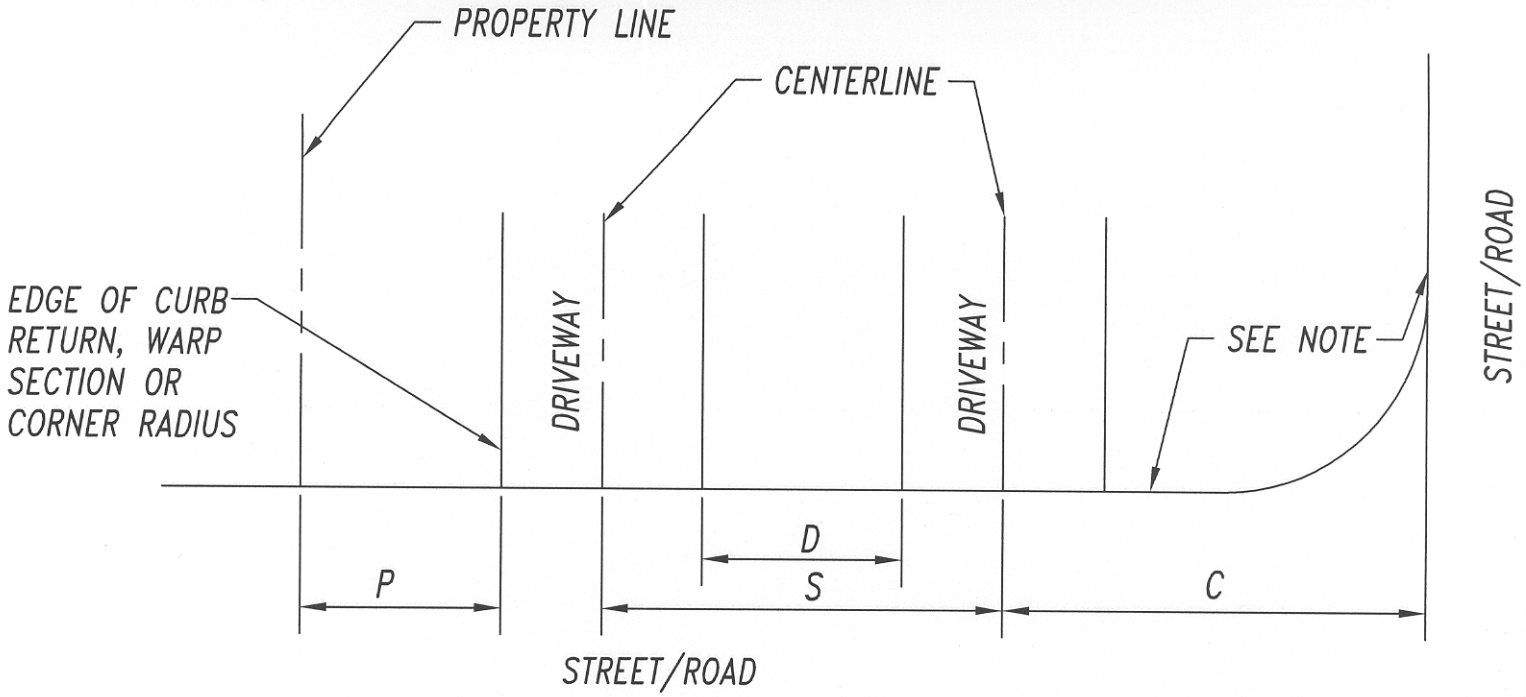

NOTE: Flowline of curb/gutter or edge of asphalt if curb/gutter does not exist or edge of shoulder if asphalt does not exist.

	Figure Reference	Dimension
Residential Driveways		
From property lines	P	5' *
From street/road intersection	C	60' **
Between driveways		
on locals	D	10'
on collectors	S	200'
on arterials	S	325'
Non-residential Driveways on Locals		
From property lines	P	5' *
From arterial street intersections	C	200' ***
From collector street intersections	C	100' ***
From local street intersections	C	60' ***
Between driveways	S	100' ***
Non-residential Driveways on Collectors		
From property lines	P	5' *
From arterial street intersections	C	300' ***
From collector street intersections	C	200' ***
From local street intersections	C	125' ***
Between driveways	S	150' ***
Non-residential Driveways on Arterials		
From property lines	P	5' *
From street intersections	C	500' ****
Between driveways	S	325' ***

* Except at shared access locations

** The C dimension may be reduced to 30 feet if stop sign control is provided at the street intersection.

*** The C and S dimensions may be reduced if approved by the Director of Public Works due to the existence of limiting factors. Selected turning movements may be prohibited.

**** If the proposed driveway is restricted to right turn movements or if it is not aligned with an existing or planned left-turn lane, the C dimension may be reduced if approved by the Director of Public Works due to the existence of limiting factors. If signalization is proposed, the minimum C distance shall be increased to 660 feet unless otherwise approved by the Director of Public Works.

DRIVEWAY SPACING

PUEBLO COUNTY PUBLIC WORKS	APPROVED: 4-23-98 REVISED: REVISED:	FIGURE NO. 24

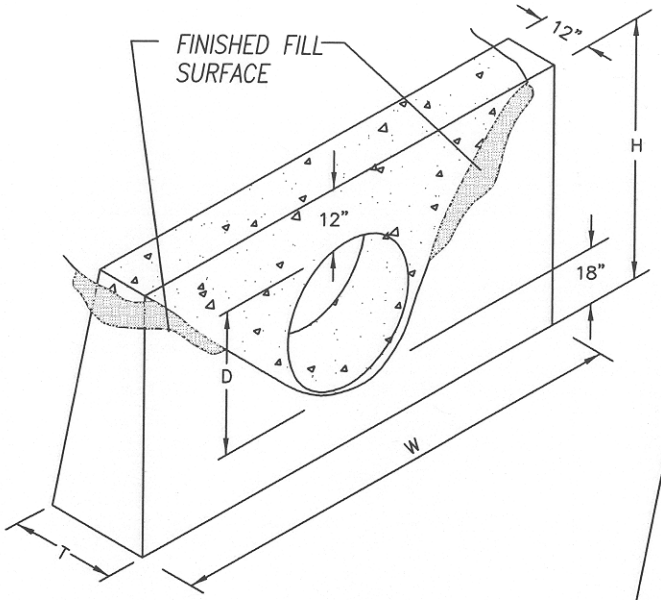

SINGLE PIPE
N.T.S.

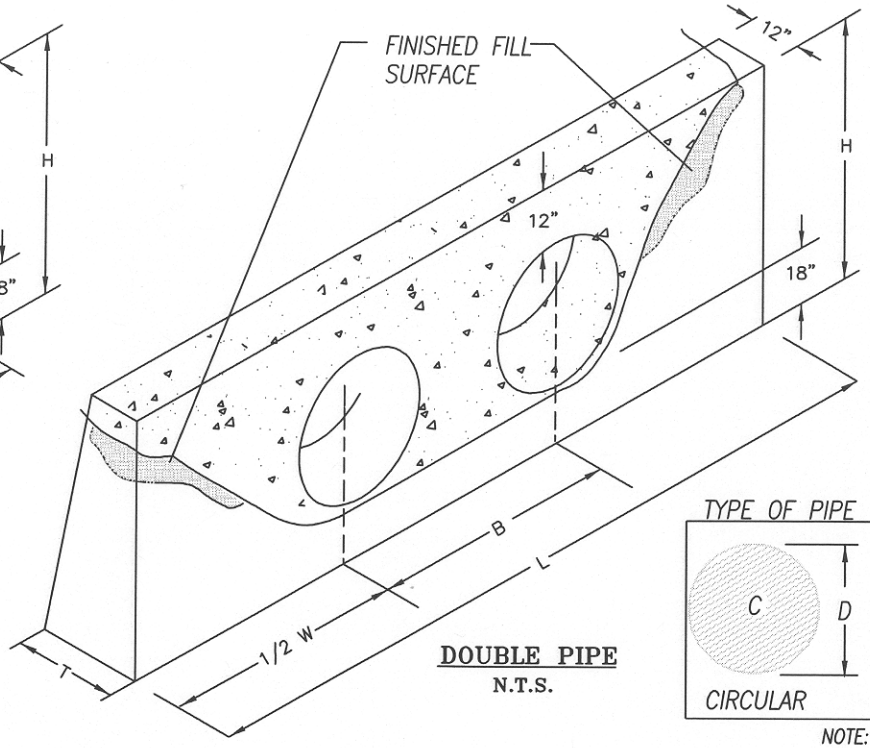

DOUBLE PIPE
N.T.S.

TYPE OF PIPE	HEADWALL DIMENSIONS
CIRCULAR	D = PIPE DIAMETER (INSIDE) H = D + 30" W = 3D + 18" T = 0.4H (NEAREST INCH) B = 1.5D (30" MINIMUM) L = W + B

NOTE: HEADWALLS FOR PIPE 48 INCHES OR LARGER IN DIAMETER MUST BE DESIGNED BY LICENSED ENGINEER SEE ART. 5.18.

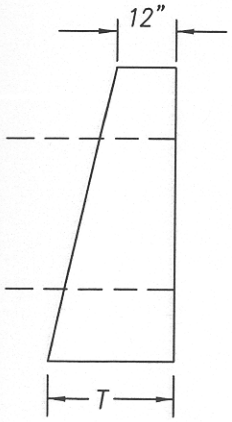

SIDE VIEW
N.T.S.

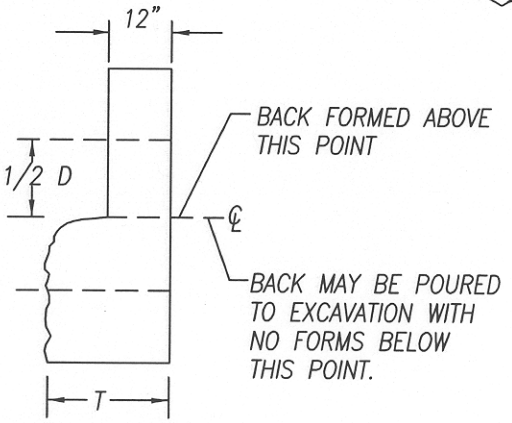

ALTERNATE CONSTRUCTION SIDE VIEW
N.T.S.

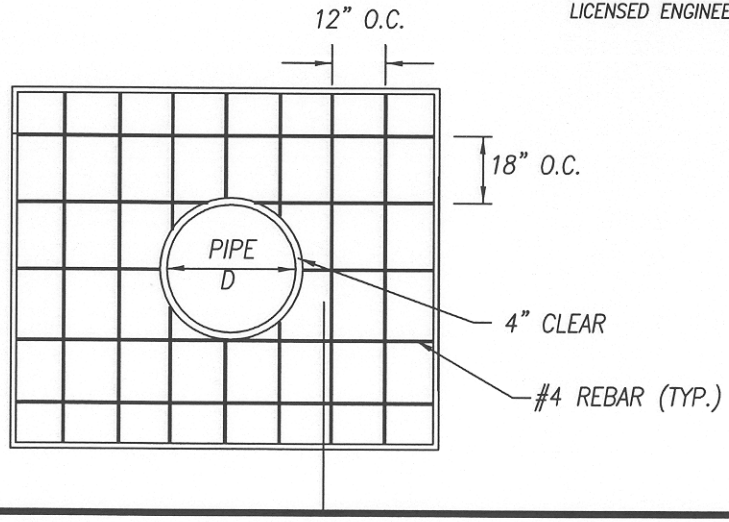

GENERAL NOTES

FOR SIZE AND LOCATION OF CULVERTS, SEE PLANS.
ALL CONCRETE SHALL BE CLASS A OR B.
FOOTINGS IN ROCK SHALL BE POURED OUT TO ROCK AND NOT FORMED
EXPOSED CONCRETE CORNERS SHALL BE CHAMFERED 3/4".

C:\ROADSTND\HEDW-CUL.DWG

CULVERT HEADWALLS – PIPES SMALLER THAN 48 INCH DIAMETER.

PUEBLO COUNTY PUBLIC WORKS

APPROVED: 4-23-98
REVISED:
REVISED:

FIGURE NO. 25

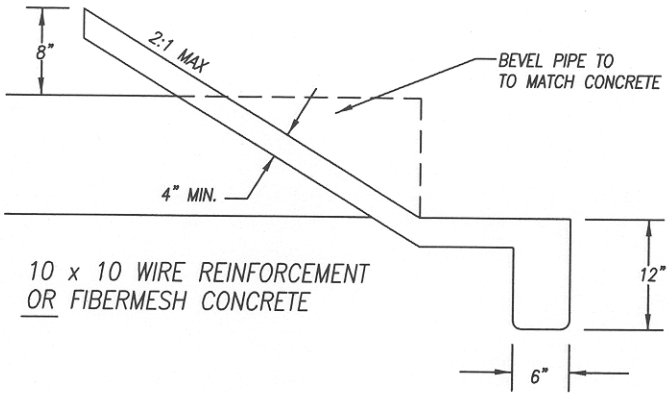

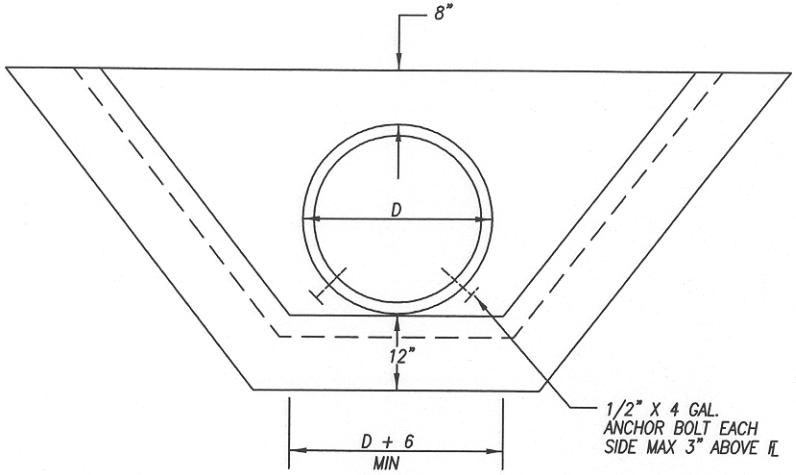

FRONT VIEW

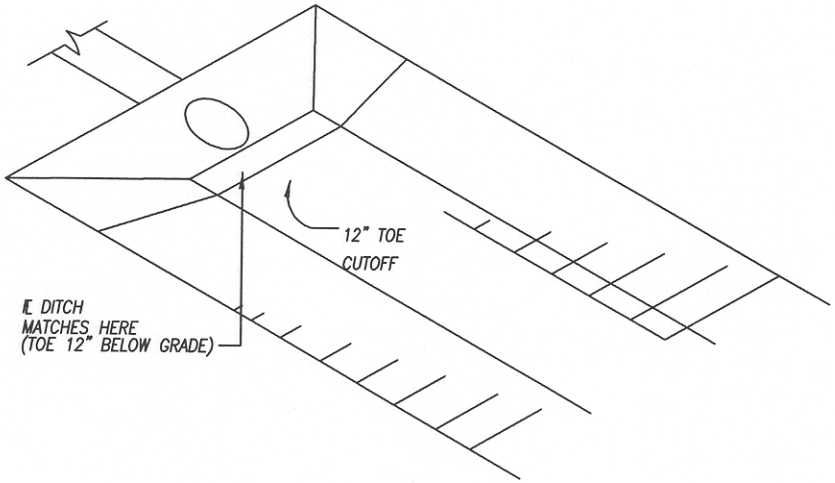

ISOMETRIC VIEW

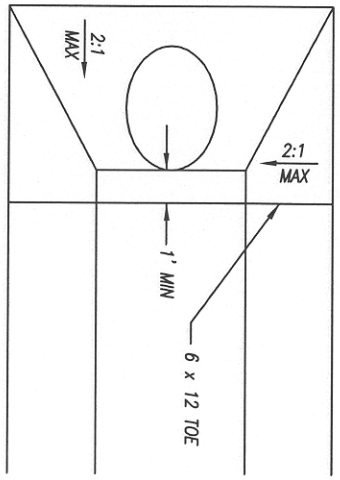

TOP VIEW

CULVERT INLET/OUTLET PAVING

PUEBLO COUNTY PUBLIC WORKS	APPROVED: 4-23-98 REVISED: REVISED:	FIGURE NO. 26

C:\ROADSTND\CUL-OUTL.DWG

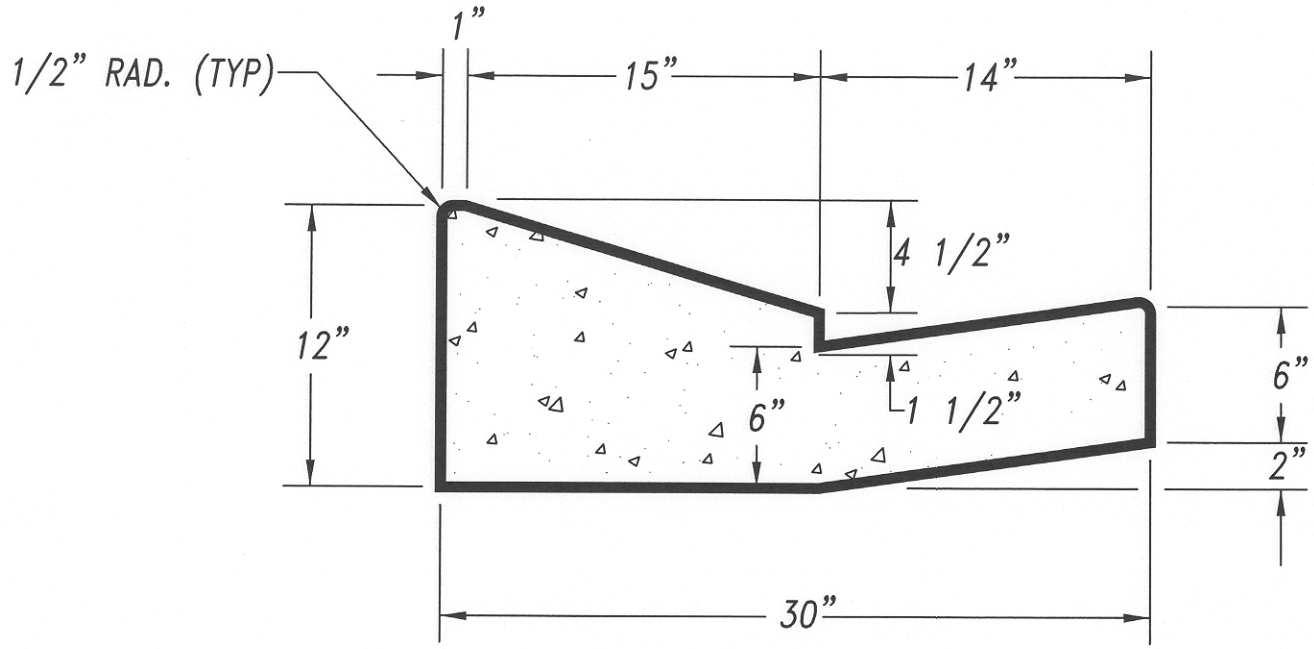

TYPICAL X-SECTION

NOT TO SCALE

ALTERNATE RAMP CURB & GUTTER		
PUEBLO COUNTY PUBLIC WORKS	APPROVED: 4-23-98 REVISED: REVISED:	FIGURE NO. 27

C:\ROADSTND\RAMP-C&G.DWG