Southern Delivery System
Raw Water Pipeline South 1 Blowoff Structure Discharge Drainage Analysis

PREPARED FOR: Colorado Springs Utilities

PREPARED BY: CH2M HILL

DATE: July 1, 2011

This technical memorandum (TM) presents a summary of the permanent blowoff structure discharge drainage analysis for the Southern Delivery System (SDS), Raw Water Pipeline, South Section, South 1 (S1) Pipeline in Pueblo County, Colorado. The South Section includes approximately 29-miles of 66-inch diameter welded steel pipe. It begins at Juniper Pump Station (JPS) near Pueblo Reservoir in Pueblo County and terminates at Williams Creek Pump Station (WCPS) in El Paso County.

The South Section is broken down into four separate reaches, S1, S2, S3, and S4. This TM focuses on S1. S1 is approximately 4.3 miles long. It extends from Juniper Road near Pueblo Reservoir to just north of Spaulding Ave in Pueblo West in Pueblo County, Colorado. **Figure 20-A-3.6.2-1** shows the S1 pipeline alignment and the locations of the blowoff structures. A total of five blowoff structures are required along S1 to fully drain the pipeline.

The blowoff structure analyses presented in this TM are for permanent blowoff structures BO S1-1, BO S1-2, BO S1-3, BO S1-4, and BO S1-5. Hydraulic and hydrologic analyses were performed at the blowoff structure locations to adequately size and locate the blowoff structures, associated discharge structures and outfalls. Allowable discharge flows, maximum velocities through the blowoff piping and main pipe, and discharge duration criteria are included in the analyses and supporting calculations are provided in **Attachment A.**

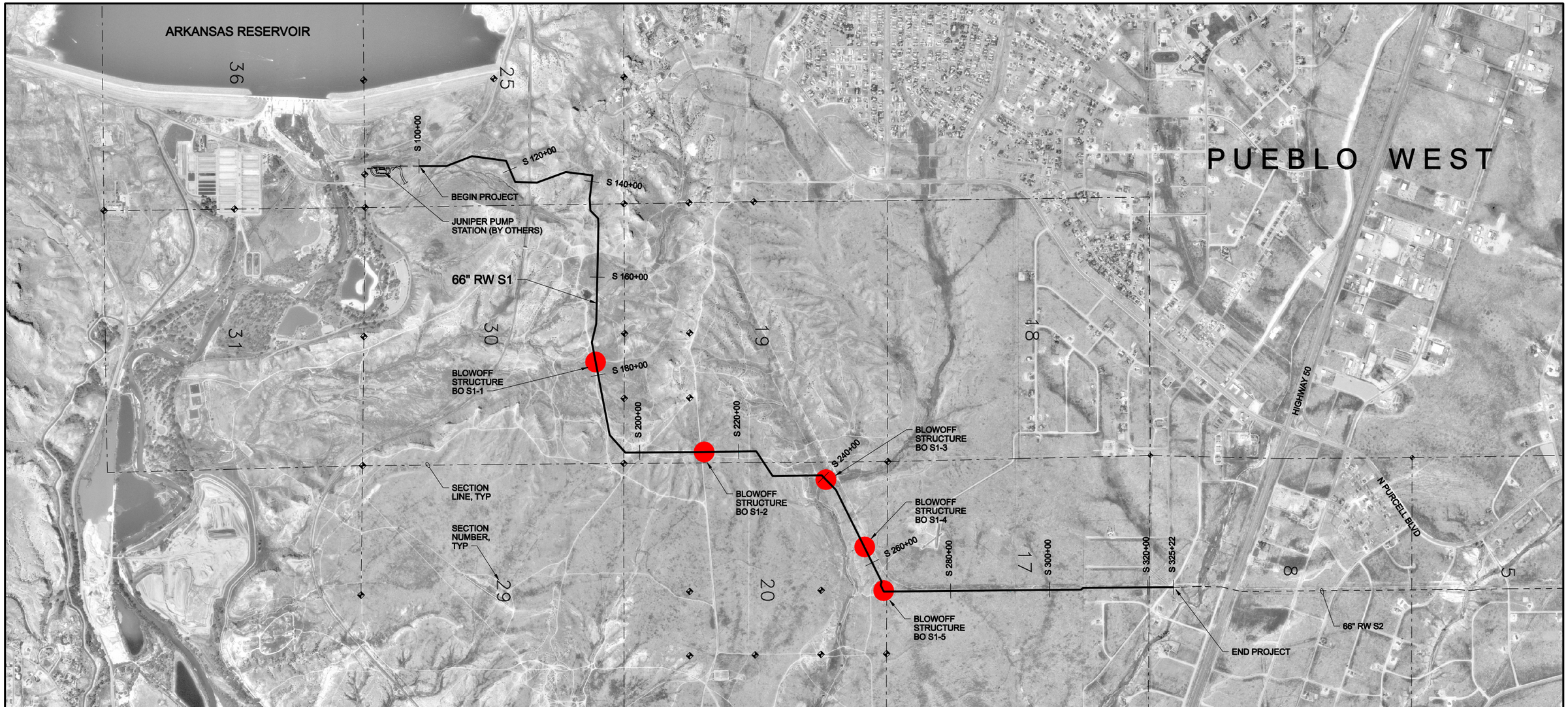

LEGEND

SECTION CORNER

BLOWOFF

RW RAW WATER

N

0 1000 2000 3000

SCALE IN FEET

FIGURE 20-A-3.6.2-1
BLOWOFF STRUCTURE LOCATIONS
SOUTH SECTION ONE
SOUTHERN DELIVERY SYSTEM
RAW WATER PIPELINE

sdS1BOstructs_171473.dgn

Blowoff Structure Descriptions

Blowoff structures are installed at low points along the pipeline. They are used to drain the raw water pipeline when maintenance is required or when breaks or leaks occur.

Blowoff Structure Types

All five S1 blowoffs are designed as blowoff Type II (**Attachment B DWG S1-D-1**). Type II blowoff structures are used when depths are less than 20 feet.

Blowoff discharge pipe sizes and components vary for the five blowoffs and are based on the:

- Volume of water that will drain to a blowoff structure location
- Static HGL acting on each blowoff structure
- Operation plan to drain the pipeline

The major components of a Type II blowoff structure, as related to S1, consist of a Vanessa isolation butterfly valve, manual valve operator, pump well with pressure gauge, and, if required, an orifice plate, discharge piping, and a discharge structure.

A Vanessa Series 30,000 QTF, butterfly isolation valve will be installed on each blowoff structure due to the high operating pressures (from 450 psi to 325 psi) on the main pipeline and Colorado Springs Utilities operations staff preference.

Pump wells will be included with each blowoff structure. Pump wells provide the option to pump out the water in the system that will not drain by gravity flow. Pressure gauge connections will be installed in the top blind flange of the pump wells, primarily for safety concerns, so that operations staff do not open the pump well when the system is pressurized nor operate the blowoff structure under pressure conditions that the blowoff structure was not designed for.

Internal energy dissipation, in the form of an orifice plate, will be required on blowoff structure BO S1-1 to reduce the pressures and velocities prior to discharge into the environment; other blowoffs on S1 do not require internal energy dissipation. Internal energy dissipation will protect the blowoff piping and isolation valves from cavitation damage and excessive velocities. Internal Energy dissipation is designed to allow the blowoff isolation valve to be fully opened without causing cavitation damage to the valve and piping. Throttling the blowoff isolation valve may lead to cavitation damage to the valve and downstream piping. Dismantling joints will be installed at valve and orifice locations to facilitate removal for maintenance.

Blowoff Discharge Structure

Discharge structure Type B will be installed at the end of the blowoff discharge pipe for BO S1-1 (**Attachment B**, **DWG S1-D-2**).

Discharge Structure Type B provides for discharge directly to a riprap pad and will be installed for blowoff structure BO S1-1, which is expected to have low discharge flows. The structure consists of a headwall and a 12-inch riprap pad for energy dissipation. The discharge piping protrudes through the headwall allowing for free discharge onto the riprap pad. A flap gate is installed at the pipe outlet.

The remaining four blowoffs are configured for smaller static heads and are to be operated as pump out only. This configuration does not include any discharge piping or surface outfalls.

Blowoff Structure Site Plans

Blowoffs, related structures, and discharge points including all grading and riprap protection are located within the defined project permanent easements and within the designated National Environmental Policy Act (NEPA) limits for SDS.

Attachment C includes blowoff structure site plans from the S1 drawings. These drawings provide the following information:

- Locations of blowoff structures and associated discharge structures and outfalls
- Discharge pipe layout and lengths
- Discharge elevations to stream channel or drainageway
- Erosion control measures around the discharge structures and receiving channels or drainages
- Permanent easement or work limit boundaries

Blowoff Design Criteria

The blowoff piping, valves, fittings, discharge structures, and outfalls are designed based on the location, maximum allowable discharge velocities through the blowoff piping and main pipe, maximum allowable discharge flows, and desirable discharge durations for each blowoff. **Table 20-A-3.6.2-1** presents the design criteria that is applied in the S1 blowoff structure discharge analysis.

TABLE 20-A-3.6.2-1
Blowoff Structure Design Criteria

Maximum Blowoff Piping Discharge Velocity	12 ft/sec
Maximum Main Pipeline Discharge Velocity	2 ft/sec
Maximum Blowoff Pipe Discharge Flows	2 year storm event of discharge channel
Minimum Blowoff Pipe Bury Depth	2.5 ft
Minimum Blowoff Discharge Pipe Slope	0.5%
Maximum Desirable Discharge Duration	5 days

Maximum velocities were established to protect the pipe linings, valve, and related fittings within the blowoff piping. Maximum discharge flows were limited to the above criteria to protect the receiving stream or channel from erosion and channel overtopping flows. Maximum desirable discharge duration of 5 days to drain S1 was considered during design.

Operational Scenario

A hydraulic analysis, based on the operation strategy presented in *TM 7-J.5 Southern Delivery System Raw Water Pipeline South Section Blowoff Structure Analysis,* dated

March 2, 2011 was performed at each blowoff location to determine blowoff pipe sizes, valve requirements, flows, and required internal energy dissipation measures. The maximum static HGL acting on BO S1-1 and BO S1-2, at the time the isolation valve will be opened is determined based on completely draining the blowoff at JPS prior to operating the other blowoffs in S1. The maximum static HGL acting on BO S1-3, BO S1-4, and BO S1-5 is determined based on completely draining the blowoff at JPS first, followed by draining BO S2-1, in the S2 pipeline, prior to operating the blowoffs.

The S1 blowoff drainage plan based on the South Section operational scenario is presented below. Operations must follow the stages below in sequential order and multiple stages cannot be performed simultaneously. For additional information on the hydraulic analysis, operational scenario, and drainage plan for the entire South Section Raw Water Pipeline refer to the *TM 7-J.5, Southern Delivery System Raw Water Pipeline South Section Blowoff Structure Analysis,* dated March 2, 2011, by CH2M HILL.

Stage 1

- Operate JPS Blowoff structure and completely drain.
- Do not open blind flanges on pump well for JPS blowoff structure until the system is depressurized with a gauge pressure of 0 psig.

Stage 2

- Do not operate BO S1-1 or BO S2-1 until the JPS blowoff structure is completely drained and is depressurized with a gauge pressure of 0 psig.
- Do not open blind flanges on pump wells for S1 blowoff structures until the gauge pressure is 0 psig.

Stage 3

- Do not operate BO S1-3, BO S1-4, and BO S1-5 until BO S2-1 is completely drained and is depressurized with a gauge pressure of 0 psig.
- Do not operate BO S1-2 until BO S1-1 is completely drained and is depressurized with a gauge pressure of 0 psig.
- Blowoff Structure BO S1-2, BO S1-3, BO S1-4, and BO S1-5 can be operated simultaneously.
- Do not open blind flanges on pump wells for S1 blowoff structures until the gauge pressure at each pump well is 0 psig.

Hydraulic Analysis

Table 20-A-3.6.2-2 presents the required blowoff pipe size, orifice size, maximum flow in cubic feet per second (cfs), length of raw water pipe and volume of water to be drained, expected drain time, and the maximum static pressure for each blowoff structure in S1 based on this operational scenario. **Attachment A** includes hydraulic analysis calculations for BO S1-1. Calculations are not included for BO S1-2, BO S1-3, BO S1-4, and BO S1-5 as they are primarily pump out only structures due to the minimal or zero volume of water that will gravity drain at their locations and minimal static pressures acting on them. For this reason it was determined that it was not economical to install discharge piping and discharge structures.

TABLE 20-A-3.6.2-2
Summary of Hydraulic Analysis Information for S1 Blowoffs

Blowoff No.	Station	Pipe Diam. (in)	Orifice Size (in)	No. of Fixed Sleeves	Maximum Flow (cfs)[1]	Approx. Drain Length (ft)	Approx. Volume to Drain (ft^3/MG)[3,4]	Estimated Drain Time (hr)[2]	Approx. Maximum Static Head (ft)[3]
BO S1-1	S177+30	8	4.6	N/A	4.2	5,755	136,729/1.02	18	44
BO S1-2	S212+81	6	N/A	N/A	N/A	500	11,879/0.09	N/A	5
BO S1-3	S240+76	6	N/A	N/A	N/A	405	9,622/0.07	N/A	0
BO S1-4	S256+50	6	N/A	N/A	N/A	800	19 ,007/0.14	N/A	0
BO S1-5	S266+00	6	N/A	N/A	N/A	1,400	33,262/0.25	N/A	0

[1] Maximum flow is based on a peak velocity of 12 ft/s and blowoff pipe size

[2] Estimated drains times are not provided for pump out blowoff structures, as drain times will depend on operations staff and pump out draining method.

[3] At the time the isolation valve is opened per the operational scenario described.

[4] MG = million gallons.

The total pipeline volume in S1 is approximately 4 MG. Summing the approximate volumes to drain presented in **Table 20-A.3.6.2-2**, results in a total volume of water of 1.57 MG. Approximately 2.43 MG of water will drain from S1 to the Stage 1 JPS Blowoff and the Stage 2 BO S2-1.

The approximate maximum static head in feet represents the elevation from the invert of the discharge piping at the discharge point to the maximum static HGL at the time the blowoff structure is to be operated in accordance with the South Section operational scenario.

Blowoff Discharge Volume and Duration

The approximate volume of water that discharges through a particular blowoff structure is determined using the vertical pipeline profiles from the *90 Percent Design Submittal, SDS Raw Water Pipeline S1Drawings,* dated May 2011, the *Final Design Submittal, SDS Raw Water Pipeline S2 Drawings,* April 2011 and the *SDS Raw Water Pipeline South Section Schematic Design Plan and Profile Drawings*, dated July 2005. The volumes of water to be drained at each blowoff structure is presented in **Table 20-A-3.6.2-2** and is calculated based on the maximum volume of water that will drain to each blowoff structure based on the maximum static HGL following the operational scenario previously described.

Discharge durations are calculated based on the assumption that blowoff valves will be operated at 100 percent open. Estimated discharge durations presented in **Table 20-A-3.6.2-2** are based on the volume of water that will hydraulically drain to the blowoff structure and exercising the blowoff structures based on the previously described operational scenario.

Hydrologic Analysis

Blowoff structures are designed so that the maximum flow rate into an existing drainageway will not exceed the channel forming flow for that stream. In accordance with the Southern Delivery System Project Final Environmental Impact Statement that was required under the National Environmental Policy Act, the channel forming flows for the

drainages associated with each blowoff structure are approximated using the regression equation for the 2-year return interval peak discharge developed by the U.S. Geological

Survey (USGS). From the USGS *Analysis of the Magnitude and Frequency of Floods in Colorado*, the 2-year peak flow regression equation for the plains region of Colorado is:

$$Q_{2-year} = 39.0(A)^{0.486}$$

A = the drainage basin area in square miles

Q = the peak discharge in cfs

The 2-year peak drainage basin discharge at the blowoff structure locations, as determined from the USGS Regression Equations, are presented in **Table 20-A-3.6.2-3** and are compared to the design discharges. Design discharges are provided for pump out blowoff structures BO S1-2, BO S1-3, BO S1-4, and BO S1-5, as a guide to the maximum allowable pump discharge flows and are conservative flows. Pump out flows should not exceed the USGS Regression flows shown in the table below. Colorado Springs Utilities has indicated that the largest pump that could be used for the pump out locations is a 4-inch pump with a 0.67 cfs (300 gallon per minute) flow rate.

TABLE 20-A-3.6.2-3
Blowoff Discharge and 2-Year Peak Drainage Basin Discharge Comparison for S1 Blowoff Structure Locations

Blowoff No.	S1 Station	Design Discharge (cfs)[1]	USGS Regression Flow (cfs)
BO S1-1	S 177+30	4.2	13
BO S1-2	S 212+81	0.67	8
BO S1-3	S 240+76	0.67	55
BO S1-4	S 256+50	0.67	9
BO S1-5	S 266+00	0.67	14

[1] Design discharge is based on a peak discharge velocity of 12 ft/s and blowoff pipe size

As shown in **Table 20-A-3.6.2-3**, the design discharges of the blowoff structures are significantly less than the channel forming 2 year peak flows as calculated by the USGS Regression Analysis.

Attachment A - Blowoff Calculations

South 1 Blowoff Calculations

Blowoff pipeline diameter was selected based on a desirable drain time of 24 hours or less with a blowoff velocity through the piping of 12 feet per second (fps) or less. To achieve those objectives, it was often necessary to include an orifice plate to restrict velocity to the 12 fps maximum value. Calculations to determine the need for an orifice and orifice size for controlling velocities in the blowoff piping to a maximum of 12 fps were calculated within Xcel using an iterative goal seek function. Once the blowoff pipeline has been sized and the need for an orifice to control velocities has been determined with acceptable drain times, cavitation calculations are performed to determine if the orifice is choking due to an excessive pressure drop across the orifice. If choking cavitation conditions were indicated, a fixed sleeve is required in place of the orifice to control discharge velocities without creating choking cavitation.

Drainage calculations for determining the maximum discharge velocity (v_2) through the blowoff piping was calculated based on Equation 1, Pressurized Pipe Flow Energy Equation. Maximum velocities were set at 12 fps to protect the blowoff pipe lining and to comply with the requirements of the SDS Project Final Environmental Impact Statement that was required under the National Environmental Policy Act.

$$\boxed{\frac{P_1}{\lambda} + z_1 + \frac{v_1^2}{2g} = \frac{P_2}{\lambda} + z_2 + \frac{v_2^2}{2g} + h_L}$$

Equation 1 – Pressurized Pipe Flow Energy Equation

Where:

P_1 = Upstream pressure = 0 psi, free surface

P_2 = Downstream pressure = 0 psi, free surface

v_1 = Upstream Velocity = 0 fps, velocity in transmission pipeline during draining is negligible compared to velocity in small diameter blowoff piping

v_2 = Downstream Velocity <= 12 fps, max velocity in blowoff piping

Z_1 = Upstream Elevation = Static Hydraulic Grade Line (HGL) at Blowoff

Z_2 = Downstream Elevation = 0

g = Acceleration of Gravity

γ = Specific Weight of Water = 62.4 lbs/cf

h_L = Head Loss = friction loss through: transmission pipeline (negligible), blowoff piping, and orifice (if needed)

Calculations for determining the head loss (h_L) through the blowoff piping and related appurtenances was calculated based on Equation 2, Darcy-Weisback Head Loss Equation.

$$h_L = \left(\frac{fl}{d} + 1 + \sum K_i \right) \frac{v^2}{2g}$$

Equation 2 – Darcy-Weisbach Head Loss Equation

Where:

h_L = Head Loss

f = Friction Factor

l = Pipe Length

d = Blowoff Pipe Diameter

v = Velocity through blowoff pipe

g = Acceleration of Gravity

$\sum K_i$ = Sum of Minor Loss Coefficients through blowoff piping, bends, valves and orifice plate (K_O). Losses through the Orifice plate were calculated based on Equation 3, Orifice Loss Coefficient Equation from *Miller, D. S., "Internal Flow Systems, Design and Performance Prediction" Second Edition,* and account for the majority of the losses.

$$K_O = \left[1 - \left(\frac{d_O}{D} \right)^2 C_C \right]^2 \frac{1}{\left(\frac{d_O}{D} \right)^4 C_C{}^2}$$

Equation 3 – Orifice Loss Coefficient Equation

Where:

d_O = Orifice Diameter

D = Blowoff Pipe Diameter

C_C = Contraction Coefficient

Determination of the maximum discharge flow (Q) through the blowoff piping was calculated based on Equation 4, Discharge Flow Equation.

$$Q = v_2 * A$$

Equation 4 – Discharge Flow Equation

Where:

Q = Maximum Discharge Flow <= 2 year storm event per permit requirements

v_2 = Velocity <= 12 fps

A = Blowoff Pipe Cross-Sectional Area

An approximation of the discharge durations (t) to drain the main pipeline was estimated based on Equation 5. The average discharge flow applies, not the maximum discharge flow.

$$t = \frac{V}{Q_{average}}$$

Equation 5 – Discharge Duration Equation

Where:

t = Discharge Duration

V = Volume of Water

$Q_{average}$ = Average Blowoff Discharge Flow

Table 1 presents the variables that were applied for the above equations.

TABLE 1

Blowoff No.	Blowoff Pipe Size (in)	Design Static Head (ft)	h_L (ft)	v_2 (ft/s) [1]	Q (ft^3/s) [1]	Approx. Volume (MG)	Approx. t (hours)
BO S1-1	8	44	44	12	4.2	1.02	18
BO S1-2	6	5	5	N/A	N/A	0.09	N/A
BO S1-3	6	0	N/A	N/A	N/A	0.07	NA
BO S1-4	6	0	N/A	N/A	N/A	0.14	NA
BO S1-5	6	0	N/A	N/A	N/A	0.25	NA

[1]Discharge flows and v_2 for pump out blowoffs will vary and depend on operations staff method of discharging the volume of water that will not gravity drain.

Orifice cavitation calculations were performed to determine if an orifice or other type of energy dissipation device was required and if so what the size limits would be without reaching choking cavitation within the blowoff piping and related appurtenances. For additional information regarding equations and methods refer to the Tullis, J. P. source cited below.

Orifice cavitation calculations for determining choking cavitation and orifice size were performed using the following equations from *Tullis, J. P., "Hydraulics of Pipelines – Pumps, Valves, Cavitation, Transients ,"1989.* Tullis' method requires calculation of parameters called system cavitation (σ_s) and choking cavitation (σ_{ch}). If the σ_s is less than the σ_{ch}, then an orifice plate will cause choking cavitation. For that reason an orifice plate is not recommended and a fixed sleeve is required instead.

Calculations for determining the system cavitation (σ_s) through the orifice were calculated based on Tullis, J. P. Equation 5.1.

$$\boxed{\sigma_s = \frac{P_d - P_{vg}}{\Delta P}}$$

Tullis, J.P. Equation 5.1 – System Cavitation

Where:

P_d = gage pressure at the outlet, assumed to be 0 psi

P_{vg} = absolute vapor pressure minus the barometric pressure

DP = the inlet pressure minus the outlet pressure

Calculations for determining the choking cavitation (σ_{ch}) through the orifice were calculated based on Tullis, J. P. Equation 7.1d.

$$\boxed{\sigma_{ch} = 0.15 + 1.2C_d - 0.31C_d^{\ 2} + 3.3C_d^{\ 3}}$$

Tullis, J.P. Equation 7.1d – Choking Cavitation

Calculations for determining the coefficient of discharge (C_d) in the cavitation calculation were calculated based on Tullis, J. P. Equation 7.1e.

$$\boxed{C_d = 0.019 + 0.083B - 0.203B^2 + 1.35B^3}$$

$$\boxed{B = \frac{d_O}{dD}}$$

Tullis, J.P. Equation 7.1e – Coefficient of Discharge

Table 2 presents the system and choking cavitation values that were determined for BO S1-1 using the above equations. Cavitation calculations are not applicable and were not performed for BO S1-2, BO S1-3, BO S1-4, and BO S1-5 because an orifice or fixed sleeve is not required to maintain a velocity of 12 ft/sec or less. Refer to the Tullis, J. P. source cited above for additional information.

TABLE 2

Blowoff No.	σ_s	σ_{ch}	Device Required
BO S1-1	0.919	0.494	$\sigma_{ch} < \sigma_s$, Orifice Adequate

SDS SOUTH SECTION 1 CALCULATIONS
BO S1-1

Blowoff No. BO S1-1

User Inputs

Blowoff ID	BO S1-1
Blowoff Station	177+30
Main Pipeline diameter (in)	66
Starting EGL (MSL)	4977
Discharge Elevation (MSL)	4933
Outlet Elevation (MSL)	4927
Blowoff Diameter (in)	8
Pipeline Friction Factor	0.02

Approximate Drain Time

Length of pipe to drain (ft)	5,755
Main Pipeline Area (ft^2)	23.8
Volume (ft^3)	136,729
Volume (MG)	1.0
time (s)	65,283
time (hr)	18.1

Calculated Orifice Results

Total Head (feet)	44.0
Blowoff Area (ft^2)	0.3
Discharge Velocity (fps), v_2	12.0
Velocity Head (feet)	2.2
Theoretical Discharge (cfs)	4.2
Orifice Diameter (in)	4.60

Cavitation Calculation Results

σ system	0.919
σch	0.494
Orifice Cavitation	Between incipient damaging and choking
	Orifice Adequate

Calculated Losses in Blowoff Piping

Sum Loss Coefficients	13.4
Sum Head Loss (ft), h_L	44.0

Attachment B - Blowoff Structure Details

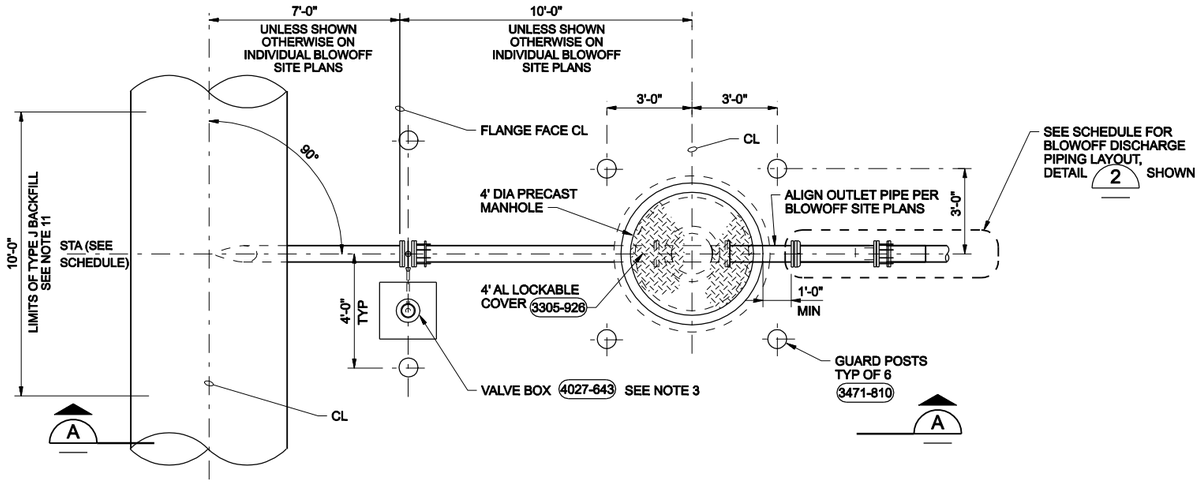

PLAN
3/8"=1'-0"

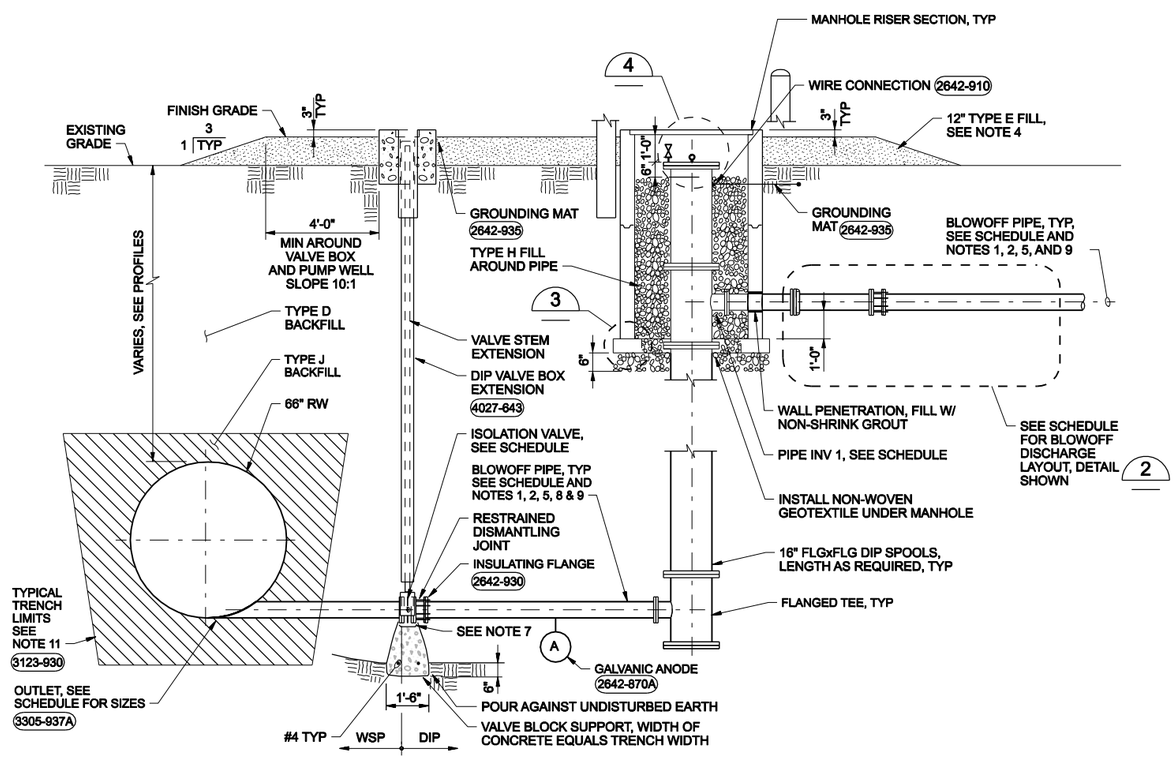

ELEVATION A
3/8"=1'-0"

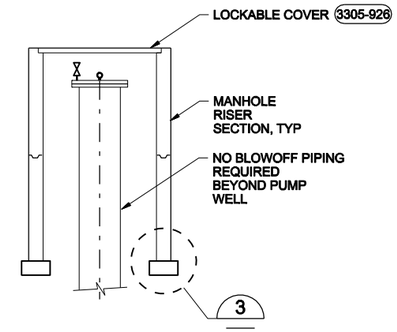

DETAIL 1
3/4"=1'-0"

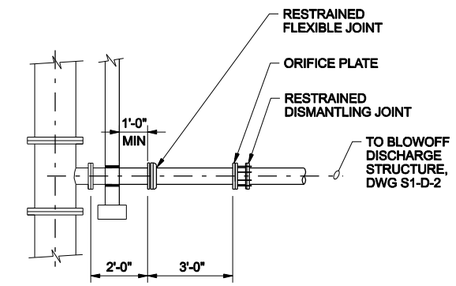

DETAIL 2
3/4"=1'-0"

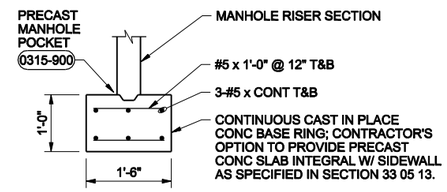

DETAIL 3
3/4"=1'-0"

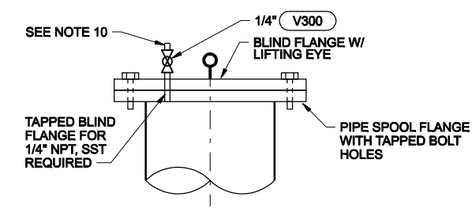

DETAIL 4
3/4"=1'-0"

NOTES:

1. BLOWOFF PIPING IS DUCTILE IRON AND WELDED STEEL PIPE AS SHOWN.
2. INSTALL RESTRAINED JOINT PIPE.
3. LOCATE VALVE BOX CENTERED OVER VALVE OPERATOR STEM.
4. PROVIDE TYPE E FILL AS REQUIRED TO FINISH GRADE AS SHOWN.
5. PROVIDE TRENCH FOR BLOWOFF PIPING, 3123-111 SIM, UNLESS OTHERWISE SHOWN.
6. STRUCTURES MAY BE CAST-IN-PLACE DESIGN IN ACCORDANCE WITH THE DESIGN CRITERIA ON DWG S1-G-10. SUBMIT DESIGN FOR APPROVAL.
7. PLACE DOUBLE LAYER OF 6 MIL POLYETHYLENE BETWEEN CONC AND VALVE.
8. SLOPE BLOWOFF PIPING AT -0.1% FROM 66" RW TO PUMP WELL UNLESS SHOWN OTHERWISE.
9. COAT BURIED FLANGES, VALVES, AND BOLTS WITH WAX TAPE.
10. FURNISH ONE 500 PSI PRESSURE GAUGE PER BLOWOFF.
11. MAKE TRANSITION TO PIPE ZONE OF 0.7 OD OUTSIDE OF LIMITS SHOWN FOR APPURTENANCES.
12. VALVES ARE OWNER FURNISHED. COORDINATE WITH CONSTRUCTION MANAGER REGARDING TYPE, SIZE, AND QUANTITY OF EACH VALVE, AND FOR SCHEDULING PICK-UP OF VALVES AT OWNERS STORAGE FACILITY.

OPERATIONAL NOTES:

1. DO NOT OPEN BLIND FLANGES ON BLOWOFFS UNTIL SYSTEM IS DEPRESSURIZED WITH A GAUGE PRESSURE OF 0 PSIG.
2. DO NOT OPERATE ISOLATION VALVE ON BLOWOFF S1-1 UNTIL THE JUNIPER PUMP STATION BLOWOFF HAS COMPLETELY DRAINED.
3. DO NOT OPERATE BLOWOFF S1-2, S1-3, S1-4, AND S1-5 UNTIL BLOWOFF S2-1 HAS COMPLETELY DRAINED.

SCHEDULE

BLOWOFF NO.	STATION	HILLSIDE OUTLET DIA & BLOWOFF SIZE (INCHES)	DISCHARGE DETAIL TYPE	ISOLATION VALVE TYPE PROVIDED BY OWNER	ORIFICE PLATE OPENING SIZE (INCHES)	PIPE INV 1 ELEVATION	PIPE INV 2 ELEVATION (SEE S1-D-2)	FLANGE PRESSURE CLASS RATING (PSI)
S1-1	S 177+30	8	DETAIL 2	V640A	4.6	4933.7	4933.6	375
S1-2	S 212+81	6	DETAIL 1	V640A	NONE	NONE	NONE	325
S1-3	S 240+76	6	DETAIL 1	V640A	NONE	NONE	NONE	350
S1-4	S 256+50	6	DETAIL 1	V640A	NONE	NONE	NONE	350
S1-5	S 266+00	6	DETAIL 1	V640A	NONE	NONE	NONE	350

DSGN	E FORD				
DR	B NORVILLE				
CHK	G SIMPSON				
APVD	J HENRY	NO.	DATE	REVISION	BY	APVD

VERIFY SCALE
BAR IS ONE INCH ON ORIGINAL DRAWING.
0 1"
IF NOT ONE INCH ON THIS SHEET, ADJUST SCALES ACCORDINGLY.

CH2MHILL
Colorado Springs, CO 80903

SOUTHERN DELIVERY SYSTEM
RAW WATER PIPELINE
SOUTH SECTION ONE

APPURTENANCE PLANS AND DETAILS

BLOWOFF ASSEMBLY TYPE II
PLAN AND ELEVATION

SHEET	36
DWG	S1-D-1
DATE	JULY 2011
PROJ	171473.20.SP

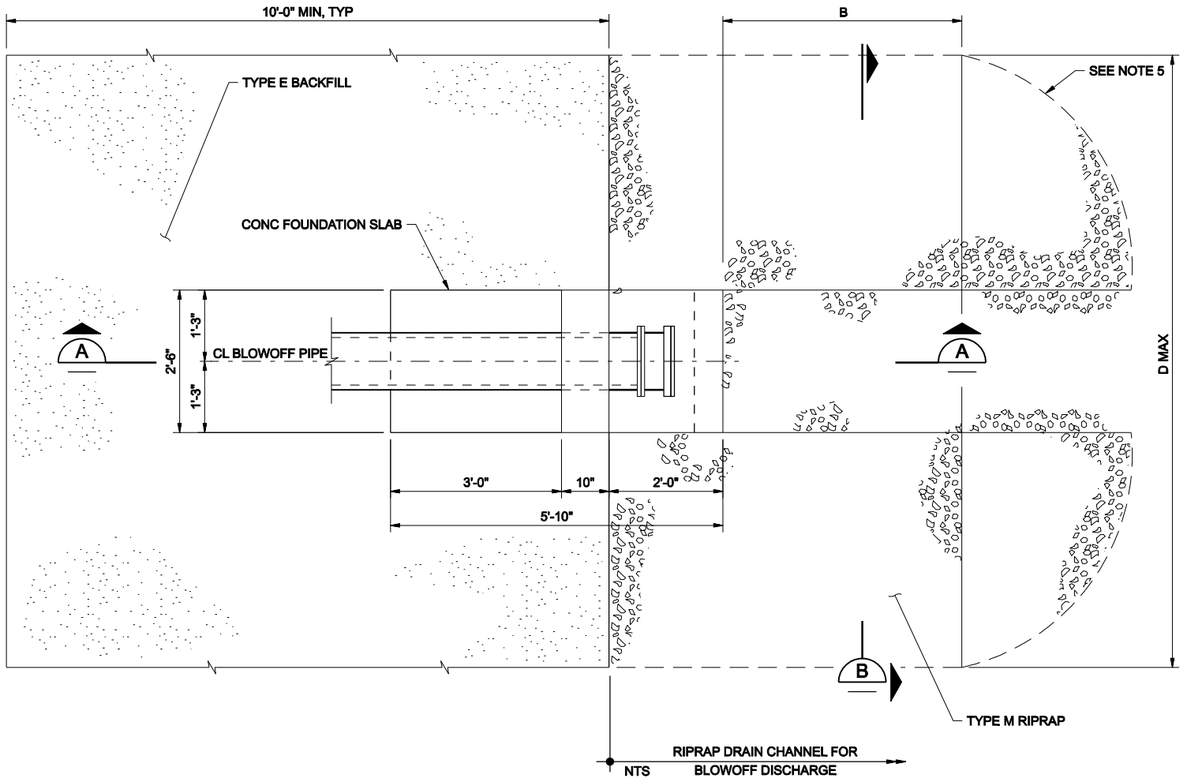

BLOWOFF DISCHARGE STRUCTURE TYPE B - PLAN

3/4"=1'-0"

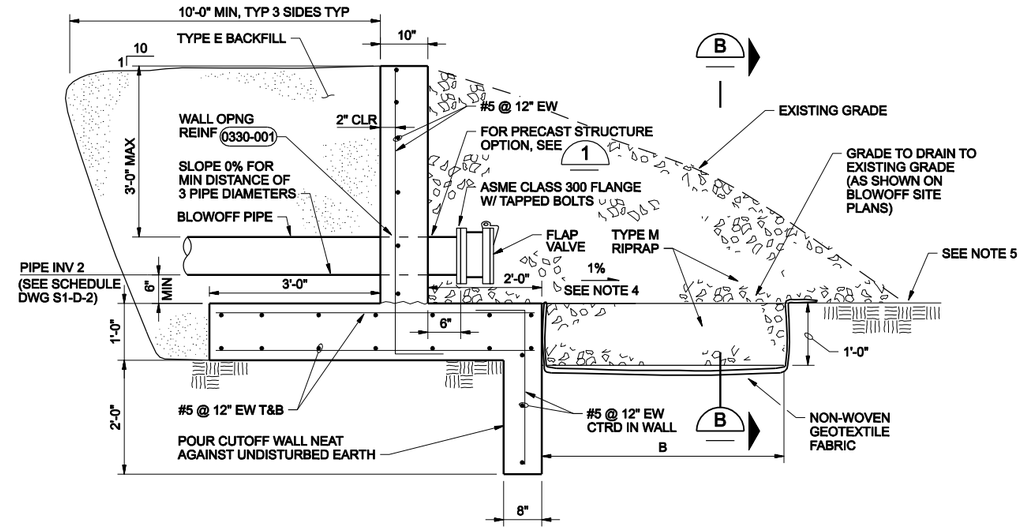

SECTION A

3/4"=1'-0"

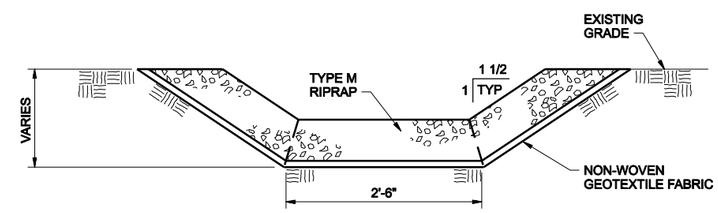

SECTION B

1/2"=1'-0"

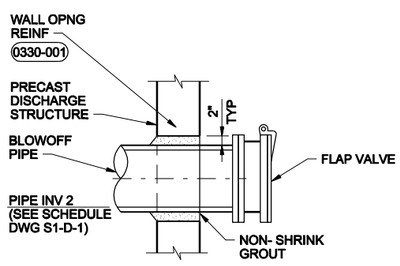

PRECAST STRUCTURE PIPE WALL
PENETRATION, SEE NOTE 3

DETAIL 1

3/4"=1'-0"

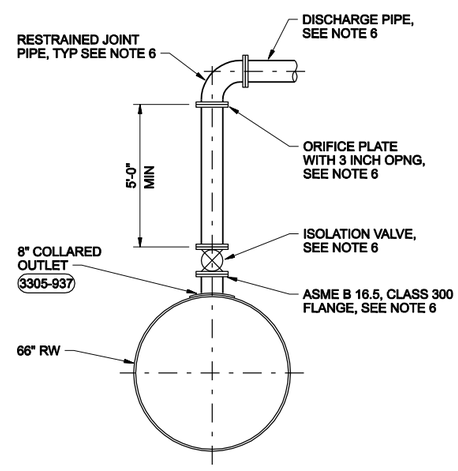

TEMPORARY BLOWOFF 2

NTS S1-PP-1

GENERAL NOTES:

1. SEE BLOWOFF ASSEMBLY SITE PLAN DRAWINGS FOR BLOWOFF CONFIGURATION AND ROUTING PLANS.
2. LENGTH OF TRAPEZOIDAL CHANNEL AND LENGTH OF APPROXIMATE GRADING ARE SHOWN ON BLOWOFF SITE PLANS.
3. STRUCTURES MAY BE PRECAST, AS SPECIFIED IN SECTION 33 05 13, MANHOLES AND PRECAST VAULTS.
4. DOWNSTREAM DRAIN CHANNEL MINIMUM SLOPE 1%.
5. EXTEND RIPRAP ON SIDE SLOPE OF TRAPEZOIDAL CHANNEL TO MATCH EXISTING GRADE
6. INSTALL TEMPORARY BLOWOFF ISOLATION VALVE, ORIFICE PLATE, DISCHARGE PIPING, AND BMP'S FOR DRAINING PIPELINE AFTER PASSING HYDROSTATIC TEST. ISOLATION VALVE TO BE RATED FOR HYDROSTATIC TEST PRESSURE. PIPING DOWNSTREAM OF ISOLATION VALVE AND ORIFICE PLATE TO BE RATED FOR 150 PSI. DISCHARGE POINT TO BE A MINIMUM OF 25 FT FROM MAIN PIPELINE. AFTER DRAINING PIPELINE, REMOVE BLOWOFF PIPING AND INSTALL AN ASME B16.5, CLASS 300 BLIND FLANGE ON 8" OUTLET.

DIMENSIONS OF BLOW-OFF DISCHARGE STRUCTURES

SCHEDULE				
BLOWOFF NO.	DISCHARGE STRUCTURE	BO PIPE DIAMETER (INCHES)	D MAX	B
S1-1	TYPE B	8	10'-5"	44'-0"

DSGN E FORD						VERIFY SCALE
DR B NORVILLE						BAR IS ONE INCH ON ORIGINAL DRAWING. 0 1" IF NOT ONE INCH ON THIS SHEET, ADJUST SCALES ACCORDINGLY.
CHK G SIMPSON						
APVD J HENRY	NO.	DATE	REVISION	BY	APVD	

CH2MHILL
Colorado Springs, CO 80903

SOUTHERN DELIVERY SYSTEM
RAW WATER PIPELINE
SOUTH SECTION ONE

APPURTENANCE PLANS AND DETAILS
BLOWOFF ASSEMBLY - TYPE B
DISCHARGE STRUCTURE - PLAN AND
SECTIONS AND TEMPORARY BLOWOFF

SHEET	37
DWG	S1-D-2
DATE	JULY 2011
PROJ	171473.20.SP

Attachment C – Blowoff Structure Site Plans

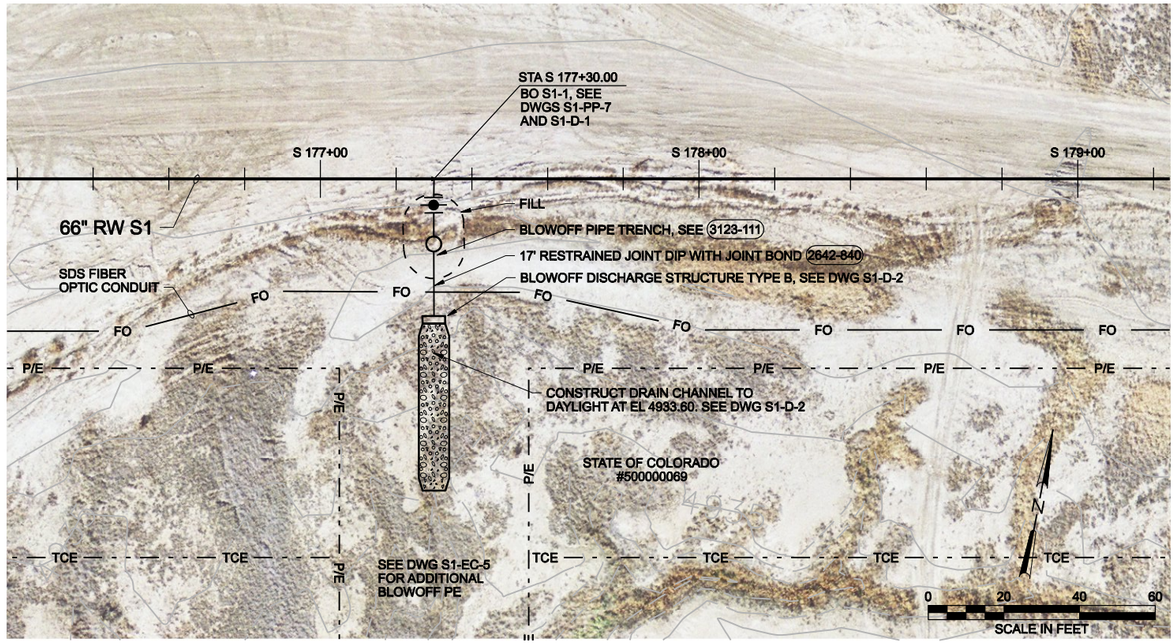

BLOWOFF S1-1 SITE PLAN

1"=20'

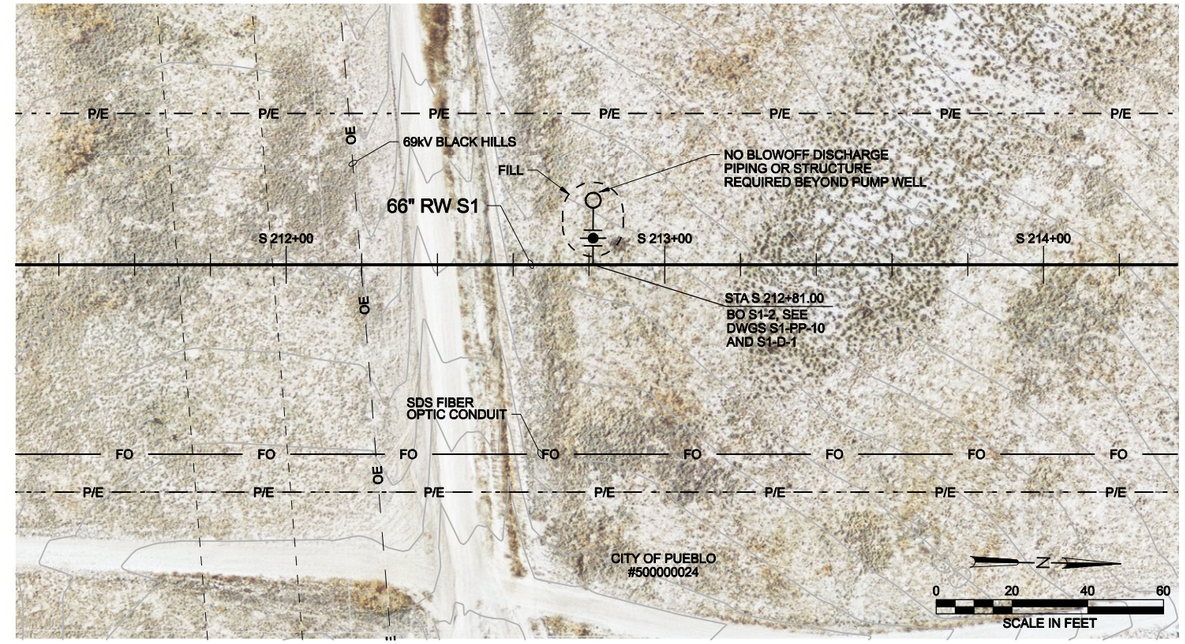

BLOWOFF S1-2 SITE PLAN

1"=20'

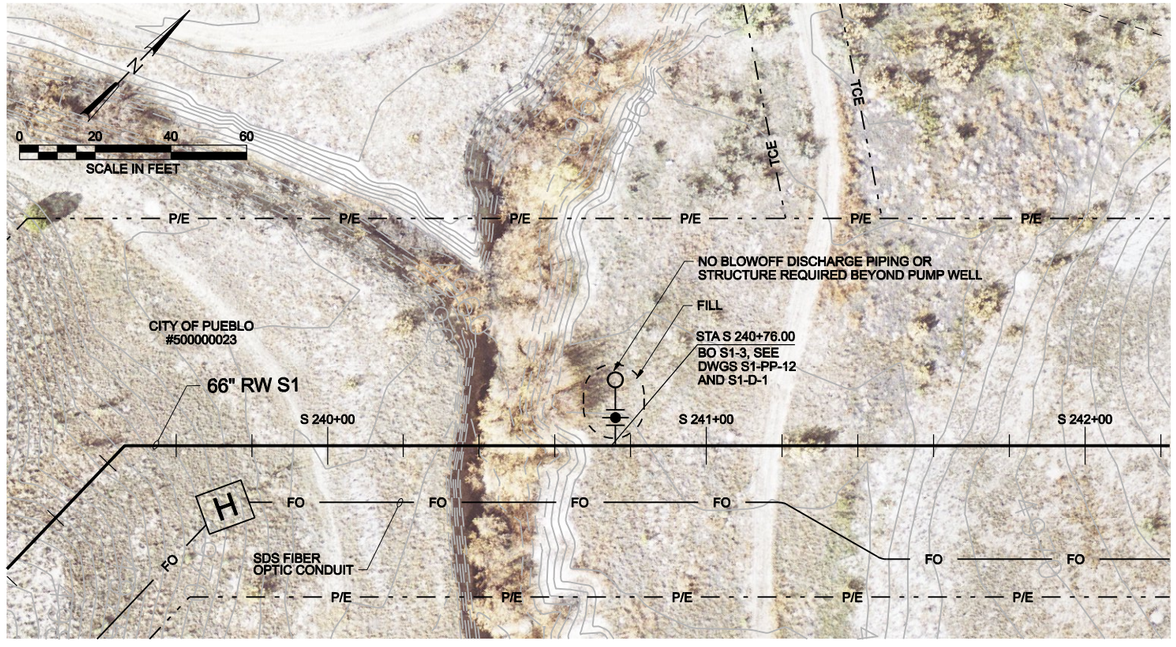

BLOWOFF S1-3 SITE PLAN

1"=20'

DSGN E FORD						
DR B NORVILLE						
CHK G SIMPSON						
APVD J HENRY	NO.	DATE	REVISION	BY	APVD	

VERIFY SCALE
BAR IS ONE INCH ON ORIGINAL DRAWING.
0 1"
IF NOT ONE INCH ON THIS SHEET, ADJUST SCALES ACCORDINGLY.

CH2MHILL
Colorado Springs, CO 80903

SOUTHERN DELIVERY SYSTEM
RAW WATER PIPELINE
SOUTH SECTION ONE

APPURTENANCE PLANS AND DETAILS

BLOWOFF ASSEMBLY SITE PLANS
S1-1, S1-2, & S1-3

SHEET	34
DWG	S1-BP-1
DATE	JULY 2011
PROJ	171473.20.SP

Colorado Springs Utilities Project Number: SDS-002 CSU Work Order Number: 1146977

FILENAME: SP105nBP01d_171473.dgn PLOT DATE: 6/18/2011 PLOT TIME: 8:43:13 AM

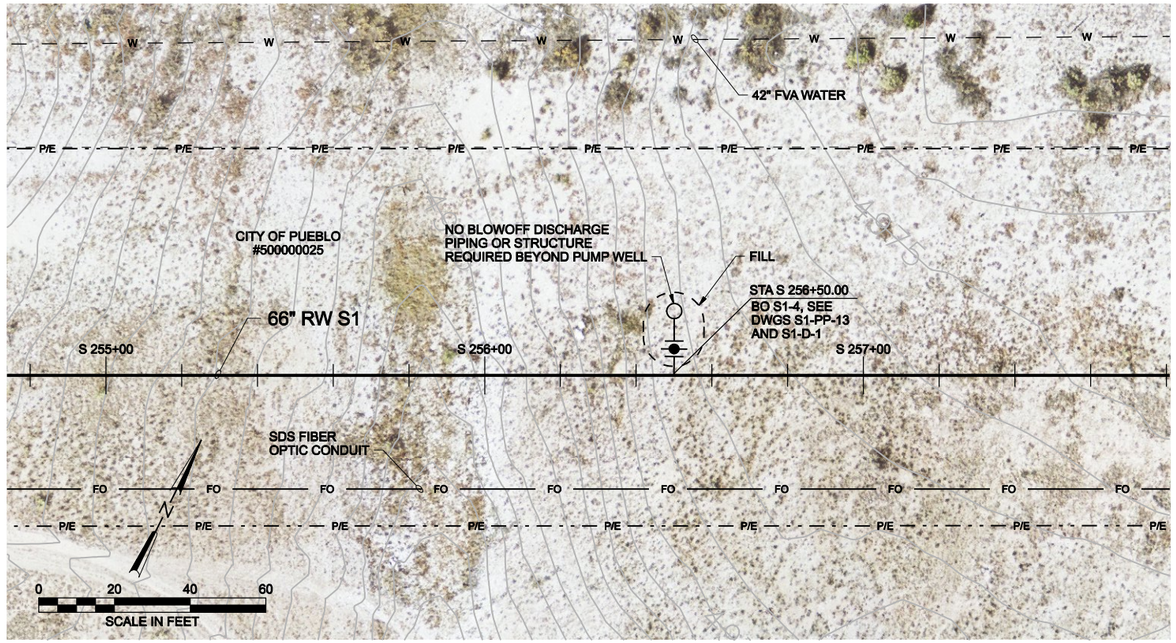

BLOWOFF S1-4 SITE PLAN

1"=20'

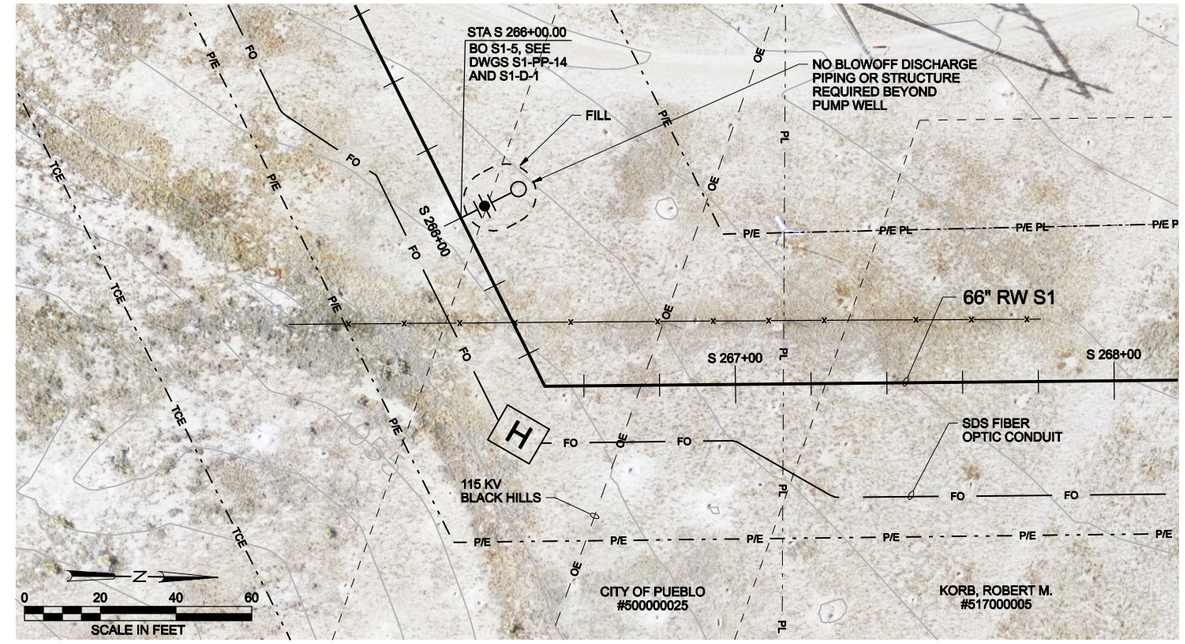

BLOWOFF S1-5 SITE PLAN

1"=20'

DSGN E FORD						
DR B NORVILLE						
CHK G SIMPSON						
APVD J HENRY	NO.	DATE	REVISION	BY	APVD	

VERIFY SCALE
BAR IS ONE INCH ON ORIGINAL DRAWING.
0 1"
IF NOT ONE INCH ON THIS SHEET, ADJUST SCALES ACCORDINGLY.

CH2MHILL
Colorado Springs, CO 80903

SOUTHERN DELIVERY SYSTEM
RAW WATER PIPELINE
SOUTH SECTION ONE

APPURTENANCE PLANS AND DETAILS

BLOWOFF ASSEMBLY SITE PLANS
S1-4 AND S1-5

SHEET	35
DWG	S1-BP-2
DATE	JULY 2011
PROJ	171473.20.SP

Colorado Springs Utilities Project Number: SDS-002 CSU Work Order Number: 1146977

FILENAME: SP105nBP02d_171473.dgn PLOT DATE: 6/14/2011 PLOT TIME: 5:57:57 AM

INDEX TO DRAWINGS

COLORADO LICENSED
JODY L. HENRY
39310
PROFESSIONAL ENGINEER

DSGN	E FORD
DR	B NORVILLE
CHK	G SIMPSON
APVD	J HENRY

NO.	DATE	REVISION	BY	APVD
1	7/13/11	ADDENDUM NO. 1 - DRAWING ADDED	BN	JH

VERIFY SCALE
BAR IS ONE INCH ON ORIGINAL DRAWING.
0 1"
IF NOT ONE INCH ON THIS SHEET, ADJUST SCALES ACCORDINGLY.

CH2MHILL
Colorado Springs, CO 80903

SOUTHERN DELIVERY SYSTEM
RAW WATER PIPELINE
SOUTH SECTION ONE

GENERAL

INDEX TO DRAWINGS

SHEET	2
DWG	S1-G-2
DATE	JULY 2011
PROJ	171473.20.SP

Colorado Springs Utilities Project Number: SDS-002 CSU Work Order Number: 1146977

FILENAME: SP101nG02d_171473.dgn PLOT DATE: 8/4/2011 PLOT TIME: 2:58:21 PM

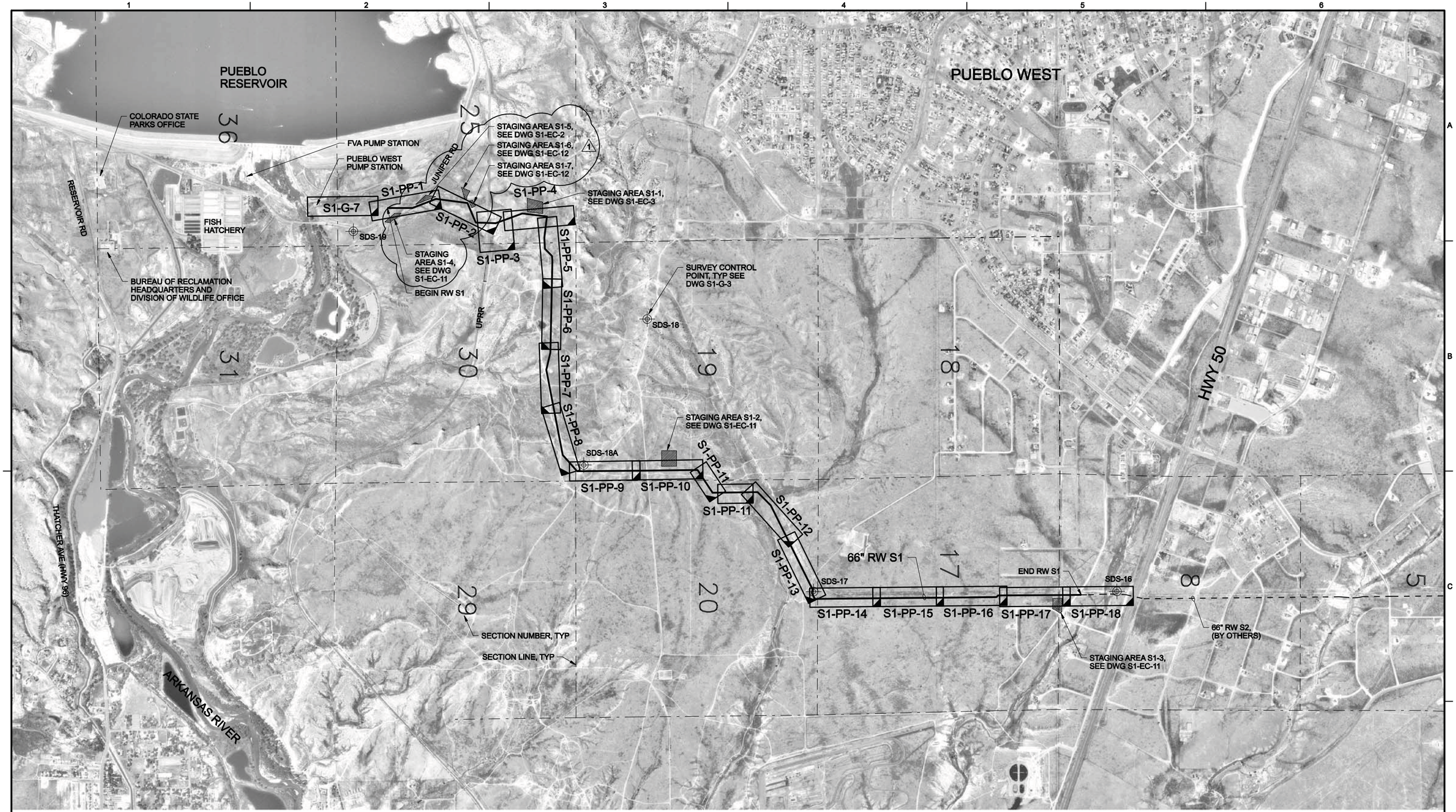

COLORADO LICENSED
JODY L. HENRY
39310
PROFESSIONAL ENGINEER

DSGN J HENRY					
DR B NORVILLE					
CHK J HENRY	1	7/13/11	ADDENDUM NO. 1	BN	JH
APVD J HENRY	NO.	DATE	REVISION	BY	APVD

VERIFY SCALE
BAR IS ONE INCH ON ORIGINAL DRAWING.
0 1"
IF NOT ONE INCH ON THIS SHEET, ADJUST SCALES ACCORDINGLY.

CH2MHILL
Colorado Springs, CO 80903

SOUTHERN DELIVERY SYSTEM
RAW WATER PIPELINE
SOUTH SECTION ONE

GENERAL

KEY PLAN AND STAGING AREAS

SHEET	6
DWG	S1-G-6
DATE	JULY 2011
PROJ	171473.20.SP

Colorado Springs Utilities Project Number: SDS-002 CSU Work Order Number: 1146977

FILENAME: SP101nG06d_171473.dgn PLOT DATE: 7/7/2011 PLOT TIME: 11:52:20 AM

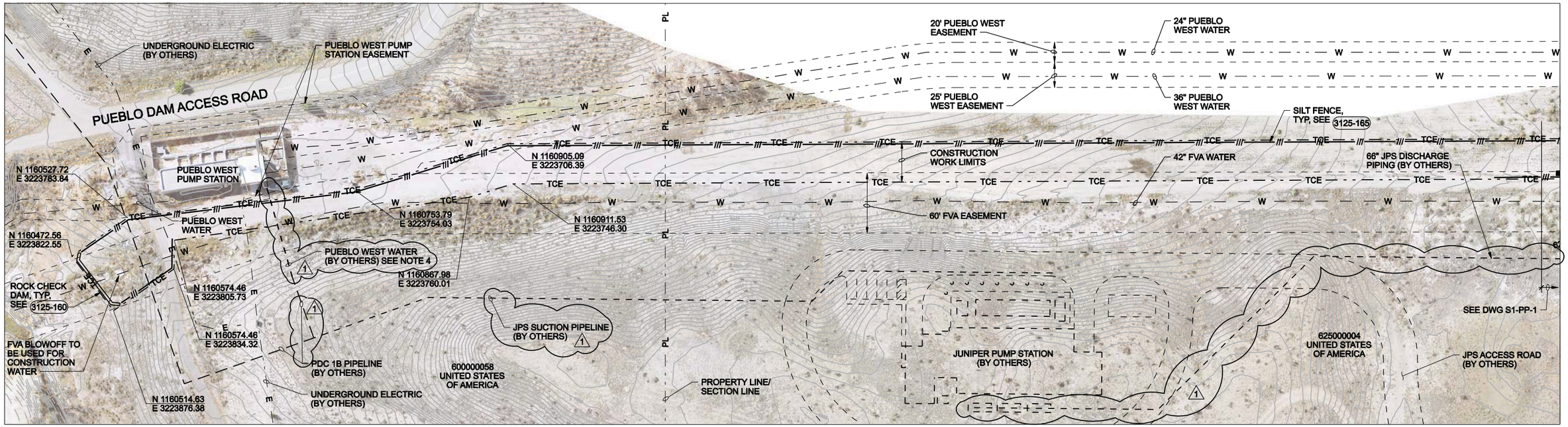

N

0 50 100 150

SCALE IN FEET

NOTES:

1. INSTALL WORK LIMIT FENCING ALONG EACH SIDE OF CONSTRUCTION WORK LIMITS, SEE DWG S1-G-14.
2. CONSTRUCTION WORK LIMITS SHOWN ON THIS DRAWING ARE TO BE USED FOR ACCESS TO FVA BLOWOFF FOR CONSTRUCTION WATER. NO MATERIAL STORAGE OR PARKING ALLOWED WITHIN WORK LIMITS SHOWN ON THIS DRAWING. COORDINATE AND ALLOW ACCESS FOR FVA STAFF AND PUEBLO WEST STAFF AS REQUIRED.
3. FOR TRAVEL ACROSS THE FVA WATER PIPELINE, MAINTAIN PRE-CONSTRUCTION DEPTH OF COVER OVER THE FVA WATER PIPELINE AND DO NOT EXCEED HS-20 LOADING.
4. (1) FOR TRAVEL ACROSS THE PUEBLO WEST WATER PIPELINE, MAINTAIN PRE-CONSTRUCTION DEPTH OF COVER OVER THE PUEBLO WEST WATER PIPELINE AND DO NOT EXCEED HS-20 LOADING. EXTENSION OF THE PUEBLO WEST SUPPLY LINE TO THE PUMP STATION SHOWN IS CONCEPTUAL. IT IS CURRENTLY IN DESIGN AND HAS NOT YET BEEN DETERMINED.

COLORADO LICENSED
JODY L. HENRY
39310
PROFESSIONAL ENGINEER

DSGN E FORD					
DR B NORVILLE					
CHK W CHRISTOFFERSON	1	7/13/11	ADDENDUM NO. 1	BN	JH
APVD J HENRY	NO.	DATE	REVISION	BY	APVD

VERIFY SCALE
BAR IS ONE INCH ON ORIGINAL DRAWING.
0 1"
IF NOT ONE INCH ON THIS SHEET, ADJUST SCALES ACCORDINGLY.

CH2MHILL
Colorado Springs, CO 80903

SOUTHERN DELIVERY SYSTEM
RAW WATER PIPELINE
SOUTH SECTION ONE

GENERAL

ACCESS TO SOUTH FVA BLOWOFF

SHEET	7
DWG	S1-G-7
DATE	JULY 2011
PROJ	171473.20.SP

Colorado Springs Utilities Project Number: SDS-002 CSU Work Order Number: 1146977

FILENAME: SP101nG07d_171473.dgn PLOT DATE: 7/28/2011 PLOT TIME: 1:05:03 PM

WORK LIMIT CONSTRUCTION FENCING SCHEDULE

WORK LIMIT CONSTRUCTION FENCING SCHEDULE			
LOCATION	EAST FENCE LINE FENCE TYPE STD DETAIL NUMBER	WEST FENCE LINE FENCE TYPE STD DETAIL NUMBER	DWG REFERENCE
ACCESS TO SOUTH FVA BLOWOFF			
PARCEL #600000058 TO POB	3231-666	3231-666	S1-G-7
POB TO E SPAULDING AVE			
POB TO PARCEL #625000004	3231-666	3231-666	S1-PP-1, S1-PP-2, S1-PP-3
PARCEL #625000004 (STAGING AREA S1-4)	3231-410	3231-410	S1-PP-1
PARCEL #625000004 (STAGING AREA S1-5)	3231-410	3231-410	S1-PP-1
PARCEL #625000004 (STAGING AREA S1-6)	3231-410	3231-410	S1-PP-2
PARCEL #625000004 (STAGING AREA S1-7)	3231-410	3231-410	S1-PP-2
PARCEL #625001001 TO PARCEL #625002001	3231-666, 3231-451	3231-666, 3231-451	S1-PP-3, S1-PP-4, S1-PP-5
PARCEL #625002001 (STAGING AREA S1-1)	3231-410	3231-410	S1-PP-4
PARCEL #500000069 TO PARCEL #500000024	3231-666	3231-666	S1-PP-5, S1-PP-6, S1-PP-7, S1-PP-8, S1-PP-9, S1-PP-10, S1-PP-11
PARCEL #500000024 (STAGING AREA S1-2)	3231-410	3231-410	S1-PP-10
PARCEL #500000025 TO PARCEL #517003002	3231-666	3231-666	S1-PP-11, S1-PP-12, S1-PP-13, S1-PP-14, S1-PP-15, S1-PP-16, S1-PP-17
PARCEL #517003001 TO PARCEL #517099366	3231-410	3231-666	S1-PP-17
PARCEL #517099366 (STAGING AREA S1-3)	3231-410	3231-410	S1-PP-17
PARCEL #508015001	3231-666	3231-666	S1-PP-17, S1 PP-18
E SPAULDING AVE TO POE			
E SPAULDING AVE TO GROUSE DR	3231-666	3231-666	S1-PP-18

NOTES:
1. LOCATION DESCRIPTIONS ARE CONSTRUCTION WORK LIMITS UNLESS NOTED OTHERWISE.
2. DO NOT INSTALL WORK LIMIT FENCING ACROSS PUBLIC ROADS.
3. ENCLOSE ENTIRE STAGING AREAS WITH CHAIN LINK FENCE. SECURE STAGING AREAS WITH A LOCKED GATE.

1

NOTES:

1. AT TURN AROUND AREA AT POB, INSTALL AND ENCLOSE ENTIRE AREA WITH ORANGE SAFETY FENCE, SEE DWG S1-PP-1 AND 3231-666.
2. AT TURN AROUND AREA AT POE INSTALL AND ENCLOSE ENTIRE AREA WITH ORANGE SAFETY FENCE, SEE DWG S1-PP-18 AND 3231-666.
3. DO NOT INSTALL WORK LIMIT FENCING ACROSS ROAD BETWEEN RIGHT-OF-WAY.
4. INSTALL WORK LIMIT FENCING 3231-666 OR 3231-410 PARALLEL TO EACH SIDE OF THE ROAD RIGHT OF WAY IN THE EAST WEST DIRECTION.
5. ENCLOSE ENTIRE STAGING AREA WITH CHAIN LINK FENCE 3231-410 . SECURE STAGING AREAS WITH A LOCKED GATE. SEE DWGS S1-PP-1, S1-PP-2, S1-PP-4, S1-PP-10, S1-PP-17, AND S1-PP-18.
6. SEE DWGS S1-EC-1 THROUGH S1-EC-11 FOR WORK LIMIT FENCING BOUNDARY.

CATHODIC PROTECTION TEST STATION SCHEDULE

CATHODIC PROTECTION TEST STATION SCHEDULE			
P&P SHEET	APPROXIMATE PIPELINE STA	LOCATE TEST STATION NEXT TO:	DETAIL
PP-1	100+20	ACCESS MANWAY	2642-837A
PP-1	106+65	FVA CROSSING	2642-806A
PP-3	124+00	START OF UPRR TUNNEL	2642-811A
PP-3	127+15	ACCESS MANWAY	2642-837A
PP-4	136+37	CARV	2642-801A
PP-5	150+00		2642-802A
PP-5	153+86	FVA CROSSING	2642-806A
PP-6	164+20		2642-802A
PP-7	177+30	BLOWOFF	2642-802A
PP-8	198+07	ACCESS MANWAY	2642-802A
PP-9	209+85	CARV	2642-801A
PP-10	220+16	CARV	2642-802A
PP-11	234+85	ACCESS MANWAY	2642-802A
PP-12	243+08	CARV	2642-802A
PP-13	256+50	BLOWOFF	2642-802A
PP-14	266+00	BLOWOFF	2642-802A
PP-14	279+00		2642-802A
PP-15	292+12	CARV	2642-801A
PP-16	307+20		2642-802A
PP-18	325+22	POE OF S1	2642-837A

NOTES:

1. INSTALL ANODES PER SPECIFICATION SECTION 26 42 02, GALVANIC ANODE CATHODIC PROTECTION SYSTEM.

FIBER OPTICS CONDUIT LENGTHS

APPROXIMATE PIPELINE STATION	LENGTH BETWEEN HANDHOLES
S 100+00	
TO	1801
S 118+01	
TO	467
S 122+68	
TO	92
S 123+60	
TO	37
S 123+97	
TO	318
S 127+15	
TO	1159
S 138+74	
TO	716
S 145+90	
TO	1660
S 162+50	
TO	2500
S 187+50	
TO	958
S 197+08	
TO	2647
S 223+55	
TO	597
S 229+52	
TO	994
S 239+46	
TO	954
S 249+00	
TO	1533
S 264+33	
TO	70
S 265+03	
TO	147
S 266+50	
TO	2500
S 291+50	
TO	1480
S 306+30	
TO	64
S 306+94	
TO	1271
S 319+65	

FIBER OPTIC CONDUIT LENGTHS AT ROAD,UTILITY, AND DRAINAGE CROSSINGS

APPROXIMATE PIPELINE STATION	APPROXIMATE LENGTH	LOCATION
S 101+50 TO S 102+10	60	JUNIPER RD
S 103+70 TO S 104+70	100	DRAINAGE
S 106+15 TO S 107+80	165	DRAINAGE / UTILITY CORRIDOR
S 137+20 TO S 139+40	220	DRAINAGE
S 147+50 TO S 152+00	450	DRAINAGE
S 153+50 TO S 154+50	100	UTILITY CORRIDOR
S 162+00 TO S 163+60	160	DRAINAGE
S 175+30 TO S 182+80	750	DRAINAGE
S 187+30 TO S 193+00	570	DRAINAGE
S 200+00 TO S 201+05	105	DRAINAGE
S 212+00 TO S 213+00	100	DRAINAGE
S 239+80 TO S 241+35	155	DRAINAGE
S 249+26 TO S 250+51	125	DRAINAGE

APPROXIMATE PIPELINE STATION	APPROXIMATE LENGTH	LOCATION
S 255+50 TO S 256+20	70	DRAINAGE
S 257+21 TO S 259+12	191	PROPOSED JOE MARTINEZ BLVD EXTENSION
S 266+00 TO S 267+00	100	DRAINAGE
S 282+50 TO S 283+50	100	DRAINAGE
S 300+00 TO S 301+00	100	DRAINAGE
S 307+00 TO S 307+82	82	UTILITY CORRIDOR
S 314+32 TO S 314+62	30	UTILITY CORRIDOR
S 318+97 TO S 321+02	205	UTILITY CORRIDOR
S 323+50 TO S 325+00	150	E SPAULDING AVE

NOTES:

1. MAINTAIN A MINIMUM BEND RADIUS OF 10 TIMES THE DIAMETER OF THE FIBER OPTIC CONDUIT.
2. BETWEEN THE STATIONS SHOWN, MATCH THE DEPTH OF THE FO CONDUIT TO THE COVER OF THE 66" RW.

COLORADO LICENSED JODY L. HENRY 39310 PROFESSIONAL ENGINEER

DSGN	E FORD				
DR	B NORVILLE				
CHK	G SIMPSON	1	7/13/11	ADDENDUM NO. 1	BN JH
APVD	J HENRY	NO.	DATE	REVISION	BY APVD

VERIFY SCALE
BAR IS ONE INCH ON ORIGINAL DRAWING.
0 1"
IF NOT ONE INCH ON THIS SHEET, ADJUST SCALES ACCORDINGLY.

CH2MHILL
Colorado Springs, CO 80903

SOUTHERN DELIVERY SYSTEM
RAW WATER PIPELINE
SOUTH SECTION ONE

GENERAL
CONSTRUCTION FENCING SCHEDULE, TEST STATION SCHEDULE, AND FIBER OPTIC INFORMATION TABLES

SHEET	14
DWG	S1-G-14
DATE	JULY 2011
PROJ	171473.20.SP

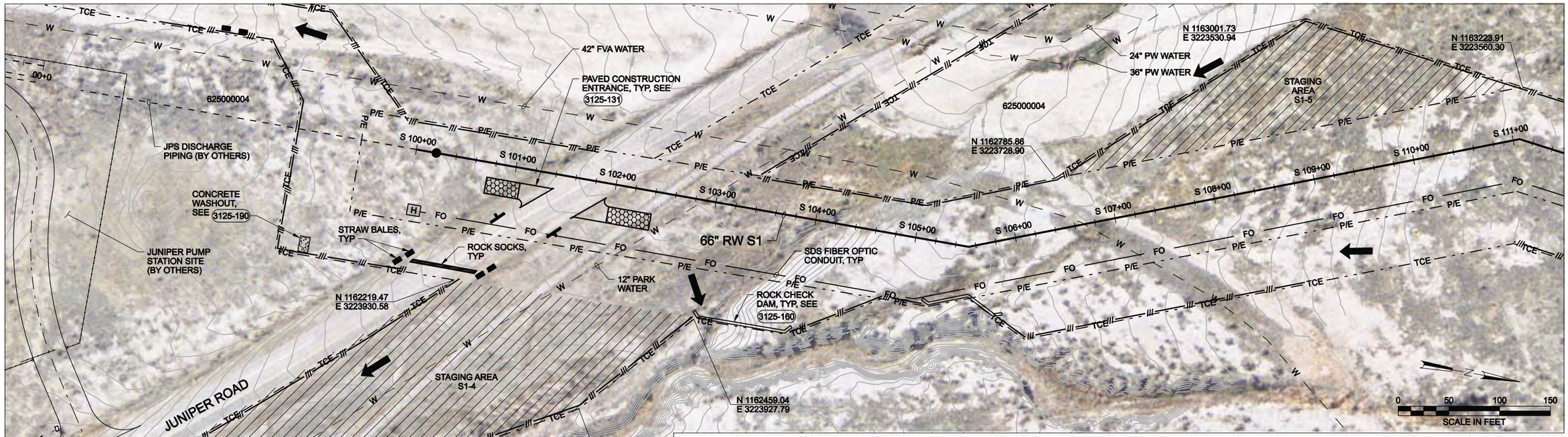

STAGING AREAS S1-4 AND S1-5 1

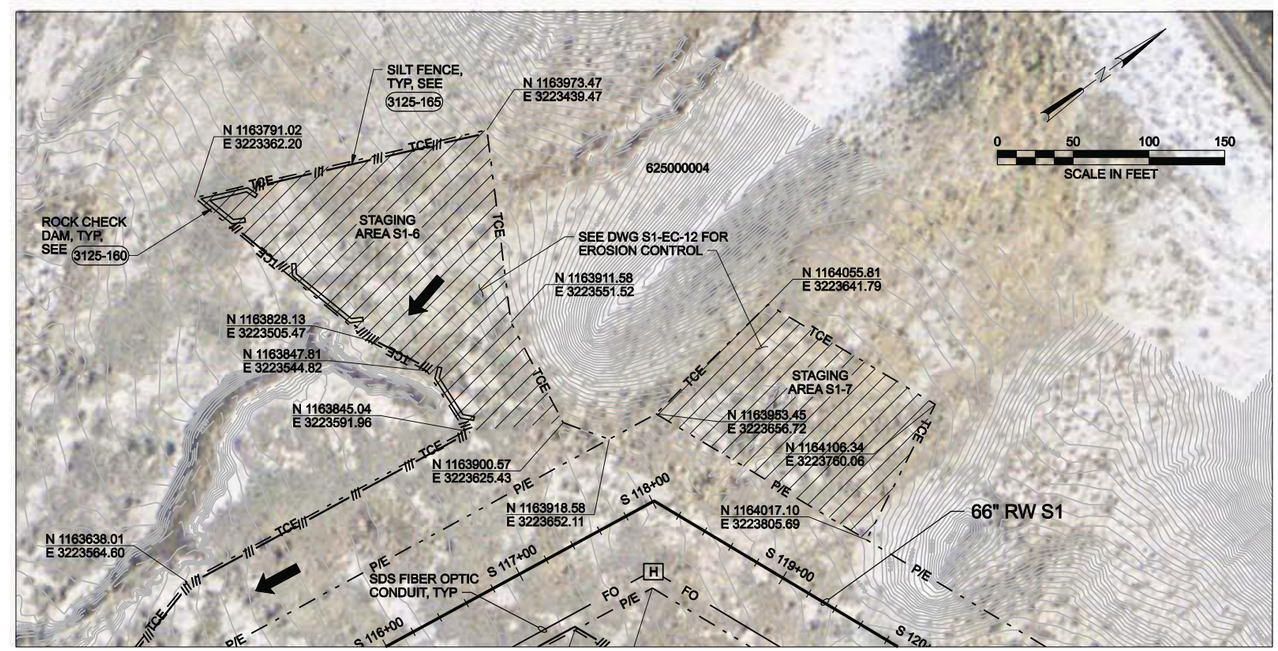

STAGING AREAS S1-6 AND S1-7 1

COLORADO LICENSED
JODY L. HENRY
39310
PROFESSIONAL ENGINEER

DSGN	E FORD					
DR	B NORVILLE					
CHK	G SIMPSON	1	7/13/11	ADDENDUM NO. 1 - TCE ADDED	BN	JH
APVD	J HENRY	NO.	DATE	REVISION	BY	APVD

VERIFY SCALE
BAR IS ONE INCH ON ORIGINAL DRAWING.
0 1"
IF NOT ONE INCH ON THIS SHEET, ADJUST SCALES ACCORDINGLY.

CH2MHILL
Colorado Springs, CO 80903

SOUTHERN DELIVERY SYSTEM
RAW WATER PIPELINE
SOUTH SECTION ONE

GENERAL

STAGING AREAS S1-4, S1-5, S1-6, AND S1-7

SHEET	14A
DWG	S1-G-14A
DATE	JULY 2011
PROJ	171473.20.SP

Colorado Springs Utilities Project Number: SDS-002 CSU Work Order Number: 1146977

FILENAME: SP101nG14d_171473.dgn PLOT DATE: 8/5/2011 PLOT TIME: 9:55:06 AM

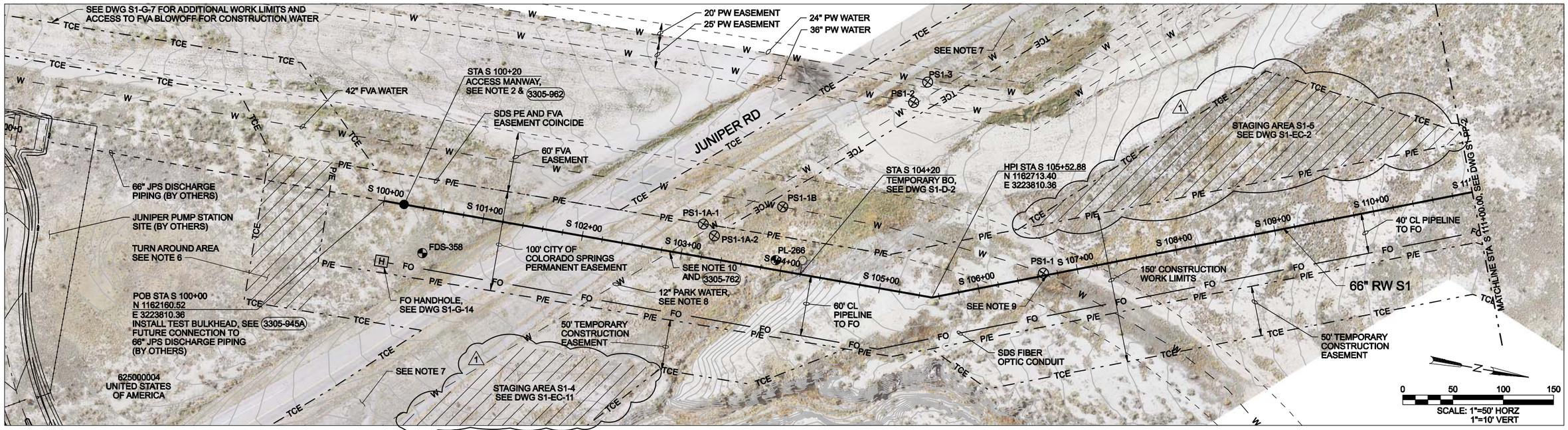

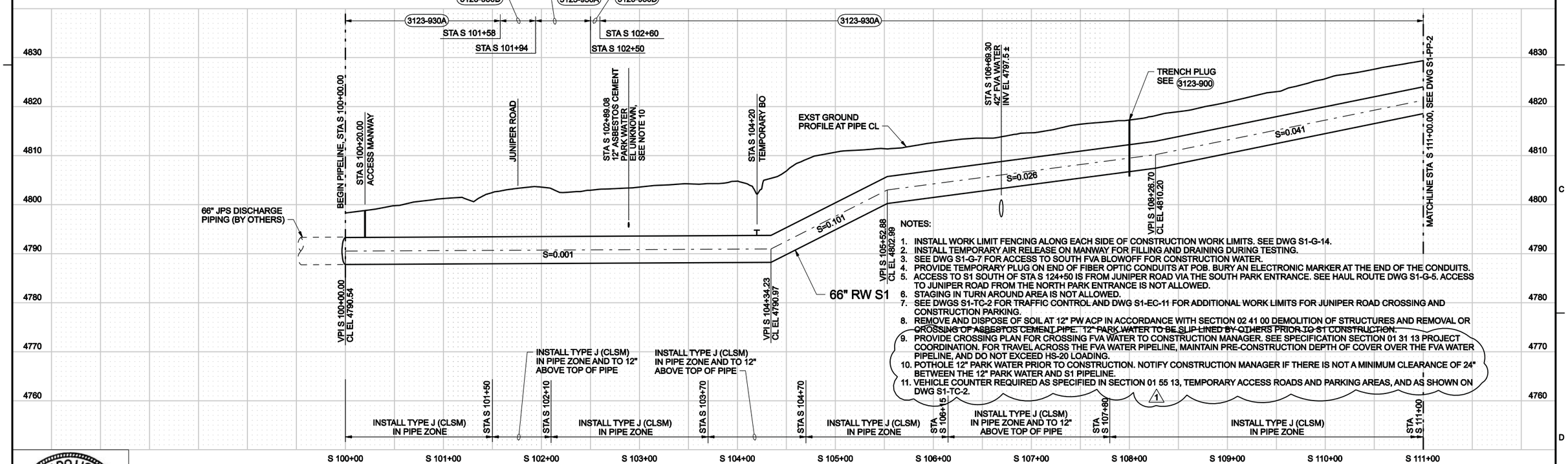

NOTES:

1. INSTALL WORK LIMIT FENCING ALONG EACH SIDE OF CONSTRUCTION WORK LIMITS. SEE DWG S1-G-14.
2. INSTALL TEMPORARY AIR RELEASE ON MANWAY FOR FILLING AND DRAINING DURING TESTING.
3. SEE DWG S1-G-7 FOR ACCESS TO SOUTH FVA BLOWOFF FOR CONSTRUCTION WATER.
4. PROVIDE TEMPORARY PLUG ON END OF FIBER OPTIC CONDUITS AT POB. BURY AN ELECTRONIC MARKER AT THE END OF THE CONDUITS.
5. ACCESS TO S1 SOUTH OF STA S 124+50 IS FROM JUNIPER ROAD VIA THE SOUTH PARK ENTRANCE. SEE HAUL ROUTE DWG S1-G-5. ACCESS TO JUNIPER ROAD FROM THE NORTH PARK ENTRANCE IS NOT ALLOWED.
6. STAGING IN TURN AROUND AREA IS NOT ALLOWED.
7. SEE DWGS S1-TC-2 FOR TRAFFIC CONTROL AND DWG S1-EC-11 FOR ADDITIONAL WORK LIMITS FOR JUNIPER ROAD CROSSING AND CONSTRUCTION PARKING.
8. REMOVE AND DISPOSE OF SOIL AT 12" PW ACP IN ACCORDANCE WITH SECTION 02 41 00 DEMOLITION OF STRUCTURES AND REMOVAL OR ~~CROSSING OF ASBESTOS CEMENT PIPE. 12" PARK WATER TO BE SLIP LINED BY OTHERS PRIOR TO S1 CONSTRUCTION.~~
9. PROVIDE CROSSING PLAN FOR CROSSING FVA WATER TO CONSTRUCTION MANAGER. SEE SPECIFICATION SECTION 01 31 13 PROJECT COORDINATION. FOR TRAVEL ACROSS THE FVA WATER PIPELINE, MAINTAIN PRE-CONSTRUCTION DEPTH OF COVER OVER THE FVA WATER PIPELINE, AND DO NOT EXCEED HS-20 LOADING.
10. POTHOLE 12" PARK WATER PRIOR TO CONSTRUCTION. NOTIFY CONSTRUCTION MANAGER IF THERE IS NOT A MINIMUM CLEARANCE OF 24" BETWEEN THE 12" PARK WATER AND S1 PIPELINE.
11. VEHICLE COUNTER REQUIRED AS SPECIFIED IN SECTION 01 55 13, TEMPORARY ACCESS ROADS AND PARKING AREAS, AND AS SHOWN ON DWG S1-TC-2.

COLORADO LICENSED
JODY L. HENRY
39310
PROFESSIONAL ENGINEER

DSGN	E FORD
DR	B NORVILLE
CHK	G SIMPSON
APVD	J HENRY

NO.	DATE	REVISION	BY	APVD
1	7/13/11	ADDENDUM NO. 1 - TCE ADDED, NOTES	BN	JH

VERIFY SCALE
BAR IS ONE INCH ON ORIGINAL DRAWING.
0 1"
IF NOT ONE INCH ON THIS SHEET, ADJUST SCALES ACCORDINGLY.

CH2MHILL
Colorado Springs, CO 80903

SOUTHERN DELIVERY SYSTEM
RAW WATER PIPELINE
SOUTH SECTION ONE

PLAN AND PROFILE

POB STATION S 100+00 TO STATION S 111+00

SHEET	15
DWG	S1-PP-1
DATE	JULY 2011
PROJ	171473.20.SP

Colorado Springs Utilities Project Number: SDS-002 CSU Work Order Number: 1146977

FILENAME: SP105nP01d_171473.dgn PLOT DATE: 7/20/2011 PLOT TIME: 8:31:36 AM

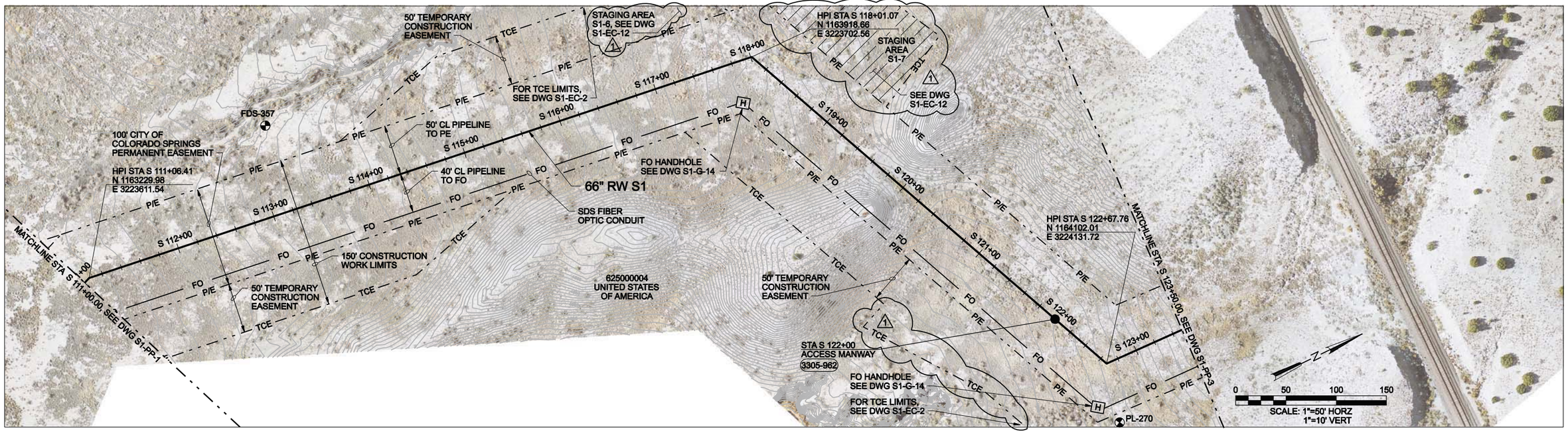

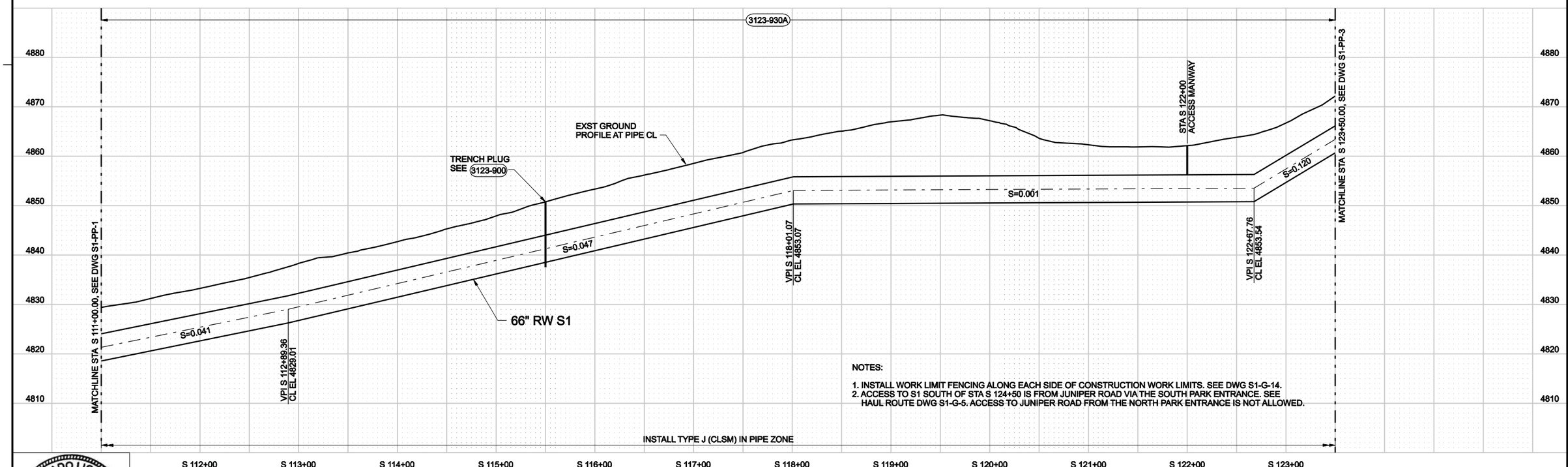

NOTES:

1. INSTALL WORK LIMIT FENCING ALONG EACH SIDE OF CONSTRUCTION WORK LIMITS. SEE DWG S1-G-14.
2. ACCESS TO S1 SOUTH OF STA S 124+50 IS FROM JUNIPER ROAD VIA THE SOUTH PARK ENTRANCE. SEE HAUL ROUTE DWG S1-G-5. ACCESS TO JUNIPER ROAD FROM THE NORTH PARK ENTRANCE IS NOT ALLOWED.

COLORADO LICENSED JODY L. HENRY 39310 PROFESSIONAL ENGINEER

DSGN	E FORD
DR	B NORVILLE
CHK	G SIMPSON
APVD	J HENRY

NO.	DATE	REVISION	BY	APVD
1	7/13/11	ADDENDUM NO. 1 - TCE ADDED	BN	JH

VERIFY SCALE
BAR IS ONE INCH ON ORIGINAL DRAWING.
0 1"
IF NOT ONE INCH ON THIS SHEET, ADJUST SCALES ACCORDINGLY.

CH2MHILL
Colorado Springs, CO 80903

SOUTHERN DELIVERY SYSTEM
RAW WATER PIPELINE
SOUTH SECTION ONE

PLAN AND PROFILE

STATION S 111+00 TO STATION S 123+50

SHEET	16
DWG	S1-PP-2
DATE	JULY 2011
PROJ	171473.20.SP

Colorado Springs Utilities Project Number: SDS-002 CSU Work Order Number: 1146977

FILENAME: SP105nP02d_171473.dgn PLOT DATE: 7/11/2011 PLOT TIME: 10:31:43 AM

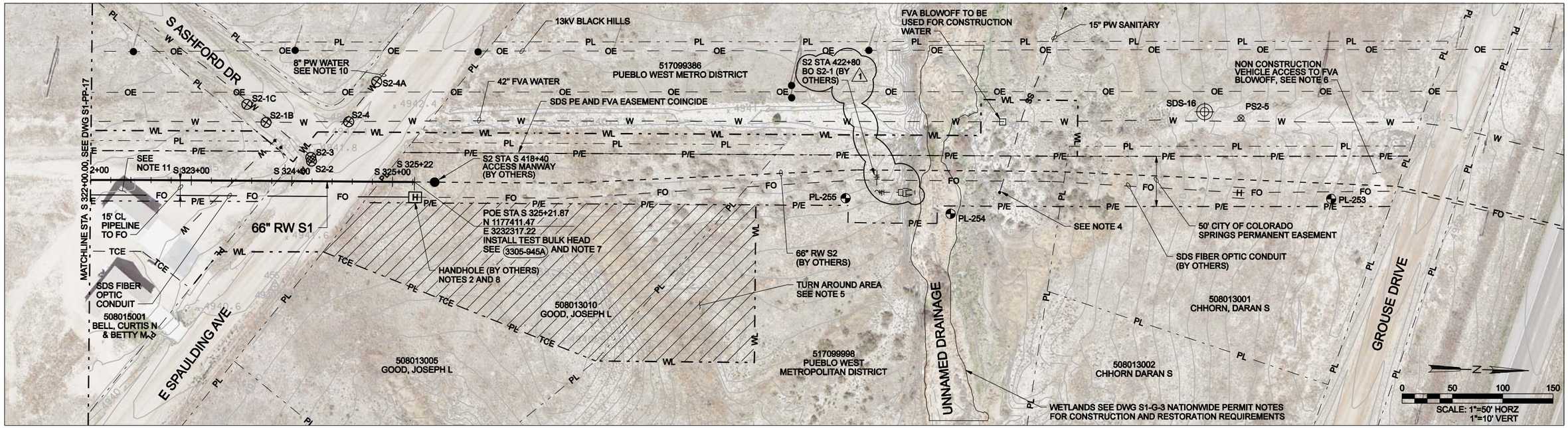

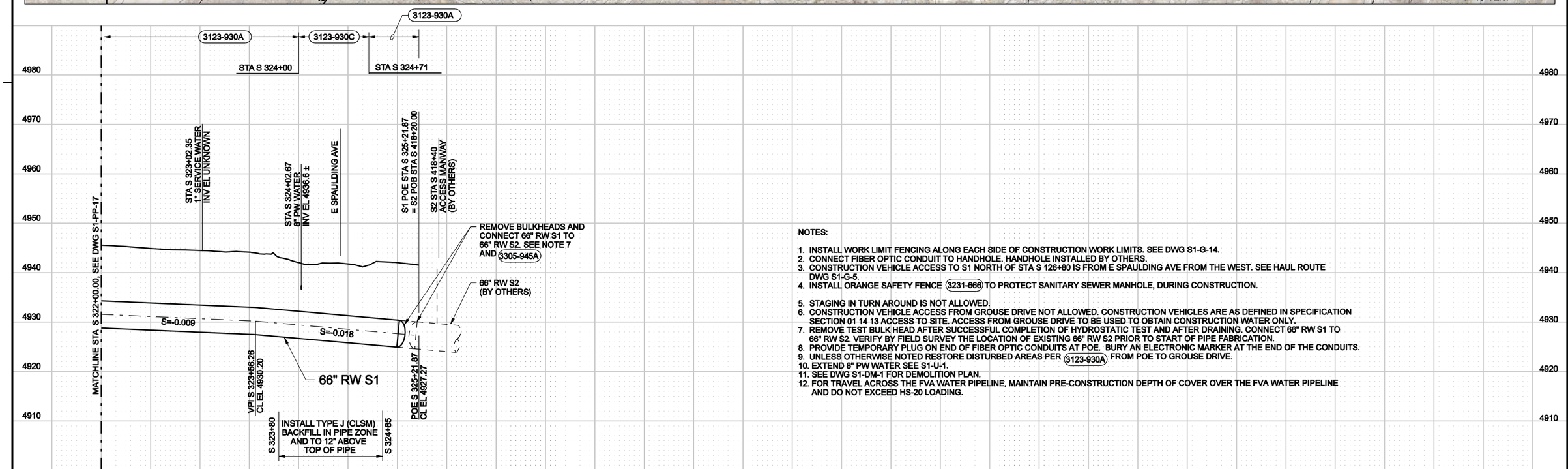

NOTES:

1. INSTALL WORK LIMIT FENCING ALONG EACH SIDE OF CONSTRUCTION WORK LIMITS. SEE DWG S1-G-14.
2. CONNECT FIBER OPTIC CONDUIT TO HANDHOLE. HANDHOLE INSTALLED BY OTHERS.
3. CONSTRUCTION VEHICLE ACCESS TO S1 NORTH OF STA S 126+80 IS FROM E SPAULDING AVE FROM THE WEST. SEE HAUL ROUTE DWG S1-G-5.
4. INSTALL ORANGE SAFETY FENCE 3231-666 TO PROTECT SANITARY SEWER MANHOLE, DURING CONSTRUCTION.
5. STAGING IN TURN AROUND IS NOT ALLOWED.
6. CONSTRUCTION VEHICLE ACCESS FROM GROUSE DRIVE NOT ALLOWED. CONSTRUCTION VEHICLES ARE AS DEFINED IN SPECIFICATION SECTION 01 14 13 ACCESS TO SITE. ACCESS FROM GROUSE DRIVE TO BE USED TO OBTAIN CONSTRUCTION WATER ONLY.
7. REMOVE TEST BULKHEAD AFTER SUCCESSFUL COMPLETION OF HYDROSTATIC TEST AND AFTER DRAINING. CONNECT 66" RW S1 TO 66" RW S2. VERIFY BY FIELD SURVEY THE LOCATION OF EXISTING 66" RW S2 PRIOR TO START OF PIPE FABRICATION.
8. PROVIDE TEMPORARY PLUG ON END OF FIBER OPTIC CONDUITS AT POE. BURY AN ELECTRONIC MARKER AT THE END OF THE CONDUITS.
9. UNLESS OTHERWISE NOTED RESTORE DISTURBED AREAS PER 3123-930A FROM POE TO GROUSE DRIVE.
10. EXTEND 8" PW WATER SEE S1-U-1.
11. SEE DWG S1-DM-1 FOR DEMOLITION PLAN.
12. FOR TRAVEL ACROSS THE FVA WATER PIPELINE, MAINTAIN PRE-CONSTRUCTION DEPTH OF COVER OVER THE FVA WATER PIPELINE AND DO NOT EXCEED HS-20 LOADING.

COLORADO LICENSED
JODY L. HENRY
39310
PROFESSIONAL ENGINEER

DSGN	E FORD					
DR	B NORVILLE					
CHK	G SIMPSON	1	7/13/11	ADDENDUM NO. 1	BN	JH
APVD	J HENRY	NO.	DATE	REVISION	BY	APVD

VERIFY SCALE
BAR IS ONE INCH ON ORIGINAL DRAWING.
0 1"
IF NOT ONE INCH ON THIS SHEET, ADJUST SCALES ACCORDINGLY.

CH2MHILL
Colorado Springs, CO 80903

SOUTHERN DELIVERY SYSTEM
RAW WATER PIPELINE
SOUTH SECTION ONE

PLAN AND PROFILE
STATION S 322+00 TO POE STATION S 325+21.87

SHEET	32
DWG	S1-PP-18
DATE	JULY 2011
PROJ	171473.20.SP

Colorado Springs Utilities Project Number: SDS-002 CSU Work Order Number: 1146977

FILENAME: SP105nP18d_171473.dgn PLOT DATE: 7/20/2011 PLOT TIME: 7:33:44 AM

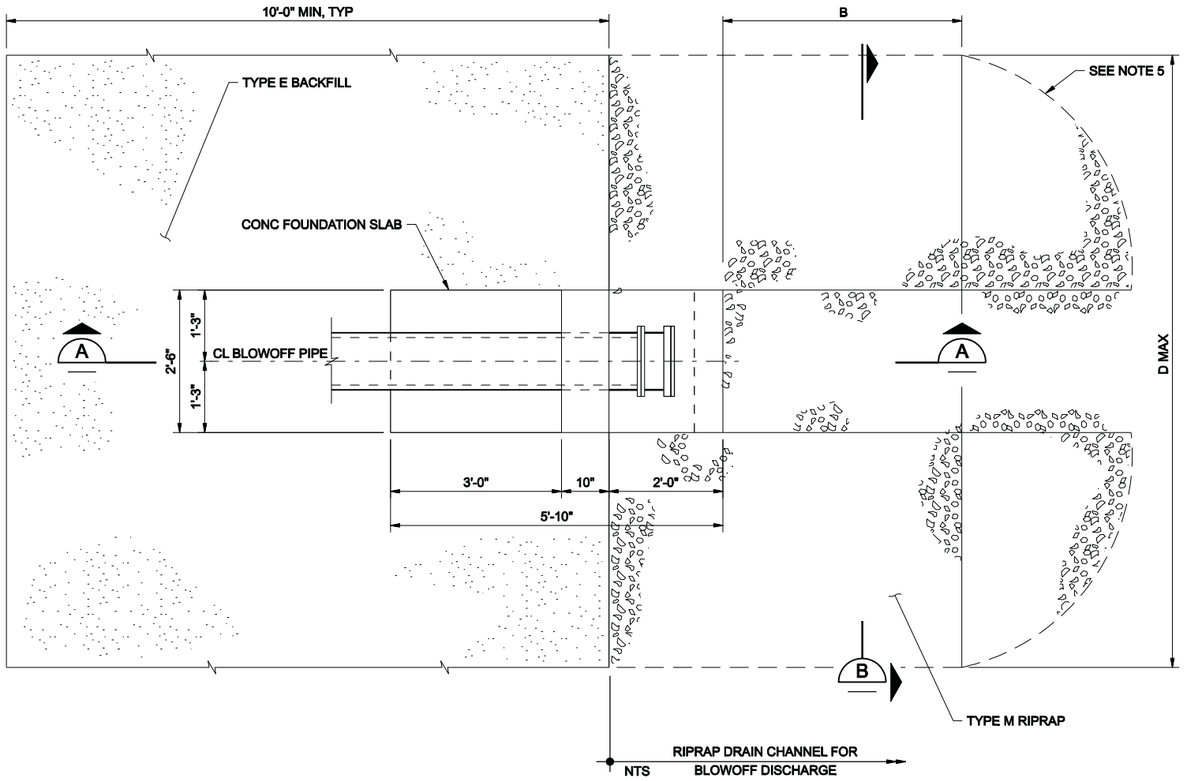

BLOWOFF DISCHARGE STRUCTURE TYPE B - PLAN

3/4"=1'-0"

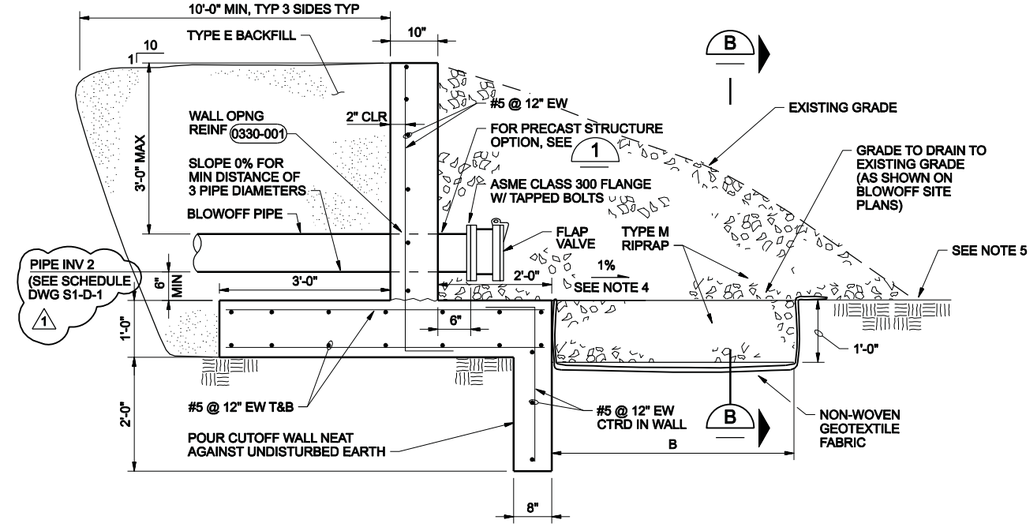

SECTION A

3/4"=1'-0"

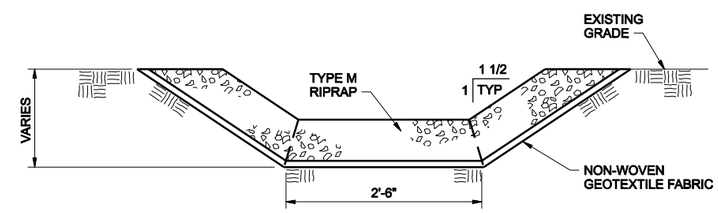

SECTION B

1/2"=1'-0"

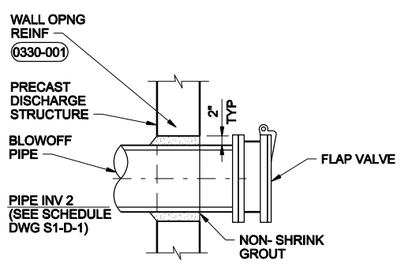

DETAIL 1

3/4"=1'-0"

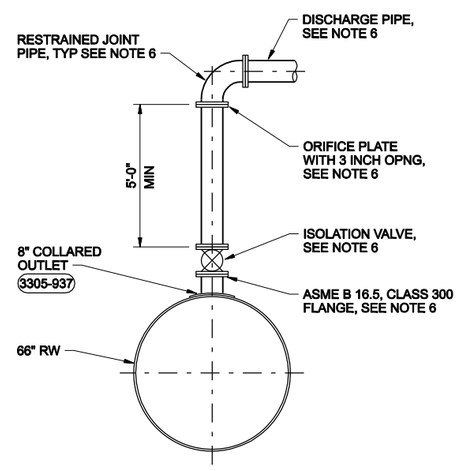

TEMPORARY BLOWOFF 2

NTS S1-PP-1

GENERAL NOTES:

1. SEE BLOWOFF ASSEMBLY SITE PLAN DRAWINGS FOR BLOWOFF CONFIGURATION AND ROUTING PLANS.
2. LENGTH OF TRAPEZOIDAL CHANNEL AND LENGTH OF APPROXIMATE GRADING ARE SHOWN ON BLOWOFF SITE PLANS.
3. STRUCTURES MAY BE PRECAST, AS SPECIFIED IN SECTION 33 05 13, MANHOLES AND PRECAST VAULTS.
4. DOWNSTREAM DRAIN CHANNEL MINIMUM SLOPE 1%.
5. EXTEND RIPRAP ON SIDE SLOPE OF TRAPEZOIDAL CHANNEL TO MATCH EXISTING GRADE
6. INSTALL TEMPORARY BLOWOFF ISOLATION VALVE, ORIFICE PLATE, DISCHARGE PIPING, AND BMP'S FOR DRAINING PIPELINE AFTER PASSING HYDROSTATIC TEST. ISOLATION VALVE TO BE RATED FOR HYDROSTATIC TEST PRESSURE. PIPING DOWNSTREAM OF ISOLATION VALVE AND ORIFICE PLATE TO BE RATED FOR 150 PSI. DISCHARGE POINT TO BE A MINIMUM OF 25 FT FROM MAIN PIPELINE. AFTER DRAINING PIPELINE, REMOVE BLOWOFF PIPING AND INSTALL AN ASME B16.5, CLASS 300 BLIND FLANGE ON 8" OUTLET. RESTORE AREA AFTER PASSING HYDROSTATIC TEST. (1)

DIMENSIONS OF BLOW-OFF DISCHARGE STRUCTURES

SCHEDULE				
BLOWOFF NO.	DISCHARGE STRUCTURE	BO PIPE DIAMETER (INCHES)	D MAX	B
S1-1	TYPE B	8	10'-5"	44'-0"

COLORADO REGISTERED PROFESSIONAL ENGINEER WILLIAM C. SHERMAN 15912

COLORADO LICENSED PROFESSIONAL ENGINEER JODY L. HENRY 39310

DSGN	E FORD					
DR	B NORVILLE					
CHK	G SIMPSON	1	7/13/11	ADDENDUM NO. 1	BN	JH
APVD	J HENRY	NO.	DATE	REVISION	BY	APVD

VERIFY SCALE
BAR IS ONE INCH ON ORIGINAL DRAWING.
0 1"
IF NOT ONE INCH ON THIS SHEET, ADJUST SCALES ACCORDINGLY.

CH2MHILL
Colorado Springs, CO 80903

SOUTHERN DELIVERY SYSTEM
RAW WATER PIPELINE
SOUTH SECTION ONE

APPURTENANCE PLANS AND DETAILS
BLOWOFF ASSEMBLY - TYPE B
DISCHARGE STRUCTURE - PLAN AND
SECTIONS AND TEMPORARY BLOWOFF

SHEET	37
DWG	S1-D-2
DATE	JULY 2011
PROJ	171473.20.SP

Colorado Springs Utilities Project Number: SDS-002 CSU Work Order Number: 1146977

FILENAME: SP105nBD01d_171473.dgn PLOT DATE: 8/1/2011 PLOT TIME: 6:42:49 AM

JUNIPER ROAD TRAFFIC MAINTENANCE AND DETOUR PLAN

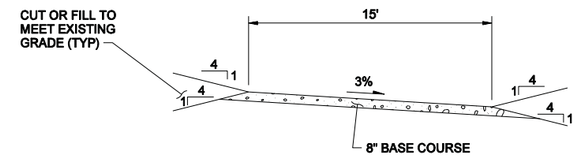

TEMPORARY GRAVEL ROAD TYPICAL SECTION 1

NTS

NOTES:

1. MAINTAIN A MINIMUM OF ONE 15' WIDE BI-DIRECTIONAL LANE FOR THE DURATION OF THE PIPELINE ROAD CROSSING CONSTRUCTION.
2. PROVIDE FLAGGERS OR PORTABLE TRAFFIC SIGNAL FOR THE DURATION OF THE PIPELINE ROAD CROSSING CONSTRUCTION AT JUNIPER ROAD.
3. REPLACE ASPHALT PAVEMENT AND STRIPING IN ACCORDANCE WITH THE PROJECT SPECIFICATIONS.
4. PROVIDE ADVANCE WARNING SIGNS AND FLAGGERS OR PORTABLE TRAFFIC SIGNAL IN CONFORMANCE WITH THE MANUAL OF UNIFORM TRAFFIC CONTROL DEVICES FOR STREETS AND HIGHWAYS.
5. TRAFFIC CONTROL PLANS REQUIRED.
6. INSTALL TRAFFIC COUNTER IN ACCORDANCE WITH SPECIFICATION SECTION 01 55 13, TEMPORARY ACCESS ROAD AND PARKING AREAS. CONTRACTOR, SUBCONTRACTOR, AND DELIVERIES TO ENTER SITE FROM THIS LOCATION FOR DURATION OF WORK AT LAKE PUEBLO STATE PARK. TEMPORARILY REMOVE TRAFFIC COUNTER DURING PUBLIC USE OF DETOUR.
7. PROVIDE TRAIL DETOUR DURING CONSTRUCTION. 1

0 50 100 200
SCALE IN FEET

COLORADO LICENSED JODY L. HENRY 39310 PROFESSIONAL ENGINEER

DSGN	J HENRY					
DR	S KRAMER					
CHK	K RONAT	1	7/13/11	ADDENDUM NO. 1	BN	JH
APVD	J HENRY	NO.	DATE	REVISION	BY	APVD

VERIFY SCALE
BAR IS ONE INCH ON ORIGINAL DRAWING.
0 1"
IF NOT ONE INCH ON THIS SHEET, ADJUST SCALES ACCORDINGLY.

CH2MHILL
Colorado Springs, CO 80903

SOUTHERN DELIVERY SYSTEM
RAW WATER PIPELINE
SOUTH SECTION ONE

TRAFFIC PHASING PLANS

TRAFFIC MAINTENANCE DETOUR PLAN

SHEET	47
DWG	S1-TC-2
DATE	JULY 2011
PROJ	171473.20.SP

Colorado Springs Utilities Project Number: SDS-002 CSU Work Order Number: 1146977

FILENAME: SP105nTC2d_171473.dgn PLOT DATE: 7/29/2011 PLOT TIME: 6:46:56 AM

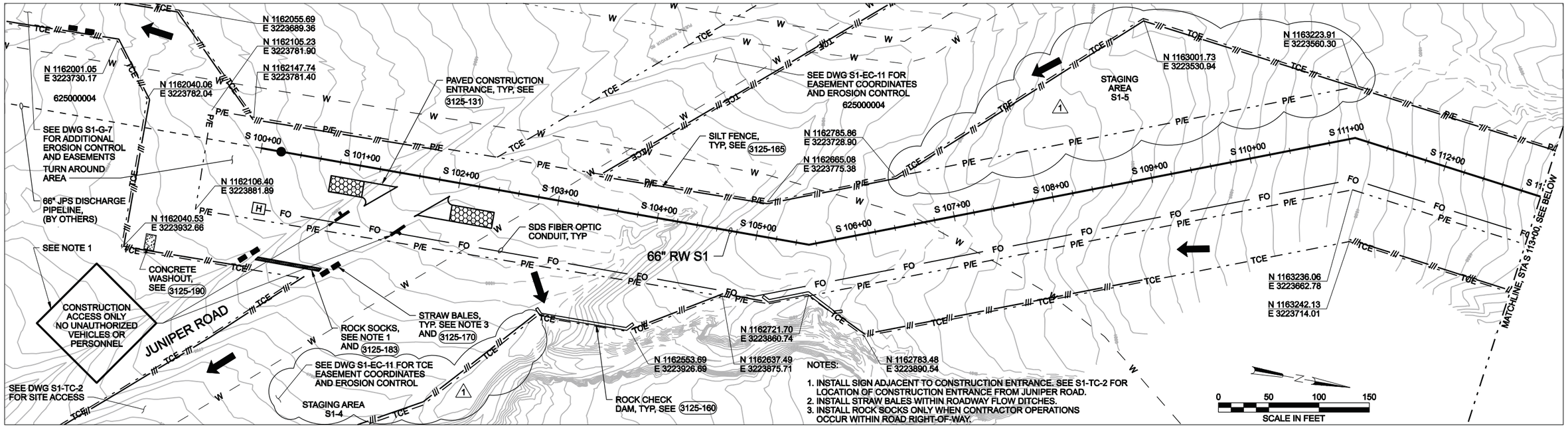

EROSION CONTROL PLAN, SEE S1-PP-1

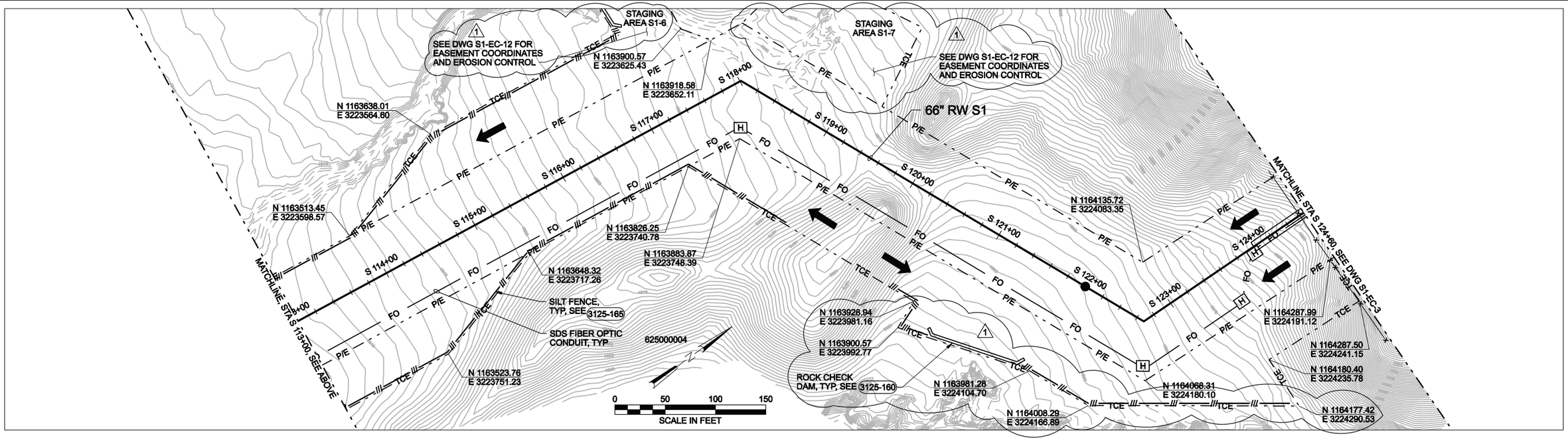

EROSION CONTROL PLAN, SEE S1-PP-2

COLORADO LICENSED
JODY L. HENRY
39310
PROFESSIONAL ENGINEER

DSGN	E FORD
DR	B NORVILLE
CHK	G SIMPSON
APVD	J HENRY

NO.	DATE	REVISION	BY	APVD
1	7/13/11	ADDENDUM NO. 1 - TCE ADDED	BN	JH

VERIFY SCALE
BAR IS ONE INCH ON ORIGINAL DRAWING.
0 1"
IF NOT ONE INCH ON THIS SHEET, ADJUST SCALES ACCORDINGLY.

CH2MHILL
Colorado Springs, CO 80903

SOUTHERN DELIVERY SYSTEM
RAW WATER PIPELINE
SOUTH SECTION ONE

EROSION CONTROL AND EASEMENT PLANS

STATION S 100+00 TO STATION S 124+60

SHEET	50
DWG	S1-EC-2
DATE	JULY 2011
PROJ	171473.20.SP

Colorado Springs Utilities Project Number: SDS-002 CSU Work Order Number: 1146977

FILENAME: SP105nEC02d_171473.dgn PLOT DATE: 7/13/2011 PLOT TIME: 11:30:57 AM

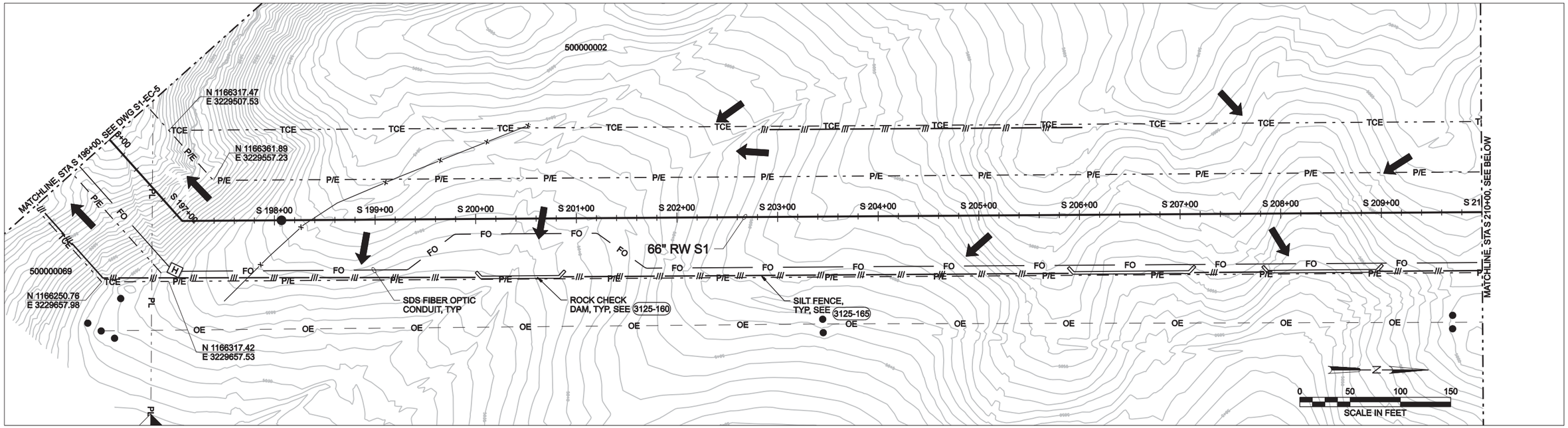

EROSION CONTROL PLAN, SEE S1-PP-9

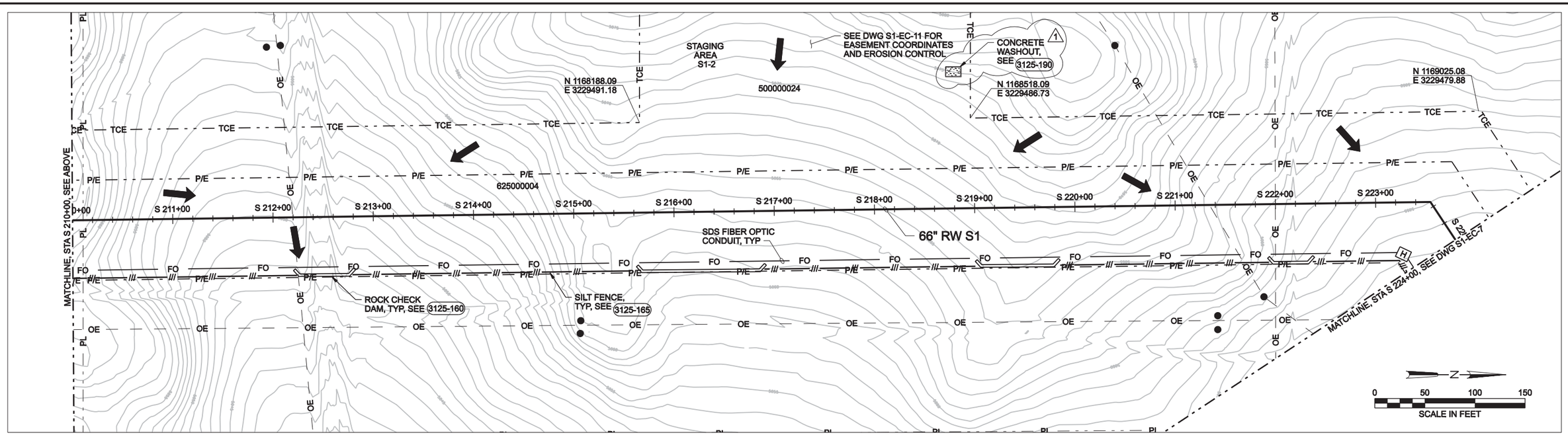

EROSION CONTROL PLAN, SEE S1-PP-10

COLORADO LICENSED
JODY L. HENRY
39310
PROFESSIONAL ENGINEER

DSGN	E FORD					
DR	B NORVILLE					
CHK	G SIMPSON	1	7/13/11	ADDENDUM NO. 1	JH	BN
APVD	J HENRY	NO.	DATE	REVISION	BY	APVD

VERIFY SCALE
BAR IS ONE INCH ON ORIGINAL DRAWING.
0 1"
IF NOT ONE INCH ON THIS SHEET, ADJUST SCALES ACCORDINGLY.

CH2MHILL
Colorado Springs, CO 80903

SOUTHERN DELIVERY SYSTEM
RAW WATER PIPELINE
SOUTH SECTION ONE

EROSION CONTROL AND EASEMENT PLANS

STATION S 196+00 TO STATION S 224+00

SHEET	54
DWG	S1-EC-6
DATE	JULY 2011
PROJ	171473.20.SP

Colorado Springs Utilities Project Number: SDS-002 CSU Work Order Number: 1146977

FILENAME: SP105nEC06d_171473.dgn PLOT DATE: 8/4/2011 PLOT TIME: 3:40:13 PM

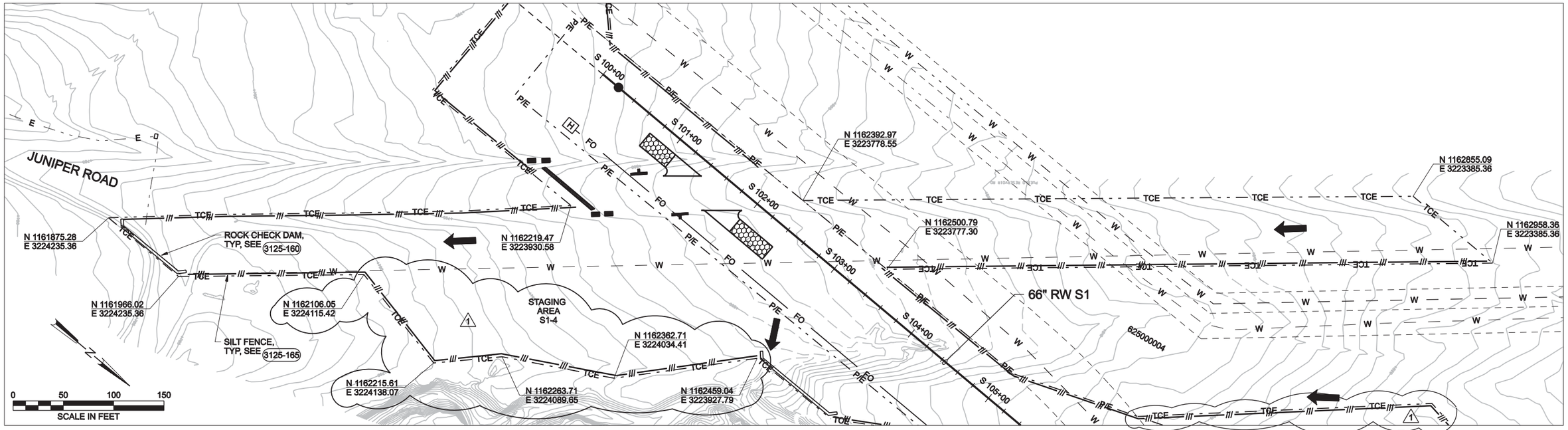

PARTIAL EASEMENT PLAN, SEE S1-PP-1

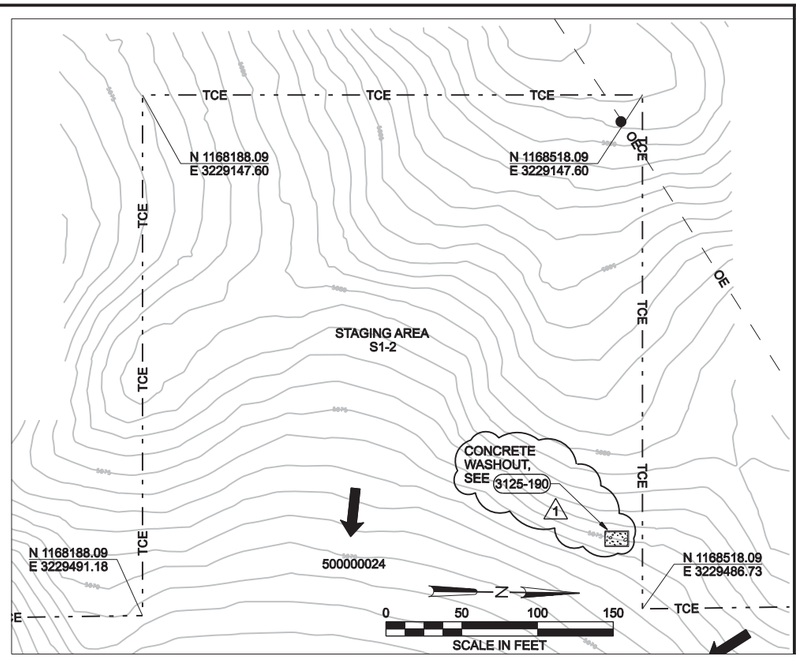

PARTIAL EASEMENT PLAN, SEE S1-PP-10

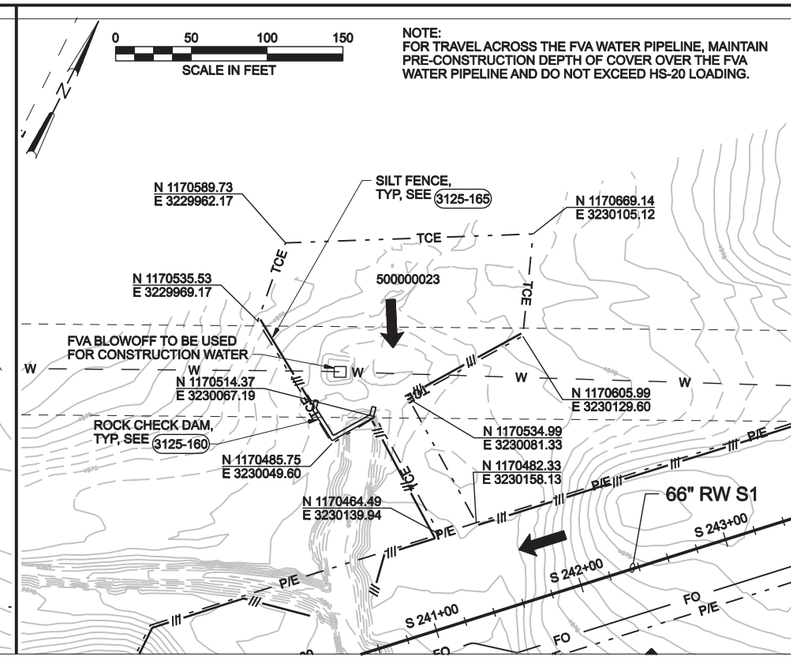

PARTIAL EASEMENT PLAN, SEE S1-PP-12

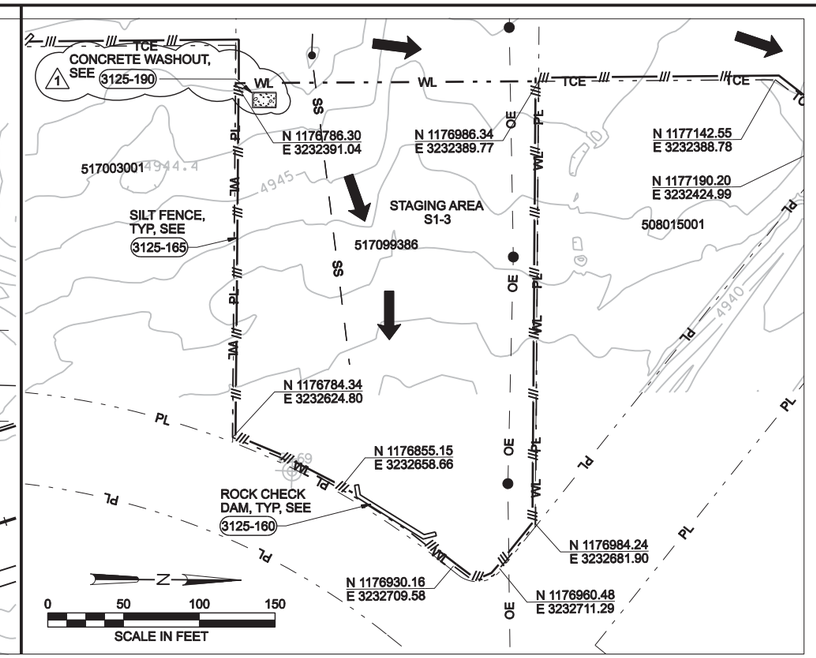

PARTIAL EASEMENT PLAN, SEE S1-PP-17

COLORADO LICENSED
JODY L. HENRY
39310
PROFESSIONAL ENGINEER

DSGN	E FORD				
DR	B NORVILLE				
CHK	G SIMPSON	1	7/13/11	ADDENDUM NO. 1 - TCE ADDED	BN	JH
APVD	J HENRY	NO.	DATE	REVISION	BY	APVD

VERIFY SCALE
BAR IS ONE INCH ON ORIGINAL DRAWING.
0 1"
IF NOT ONE INCH ON THIS SHEET, ADJUST SCALES ACCORDINGLY.

CH2MHILL
Colorado Springs, CO 80903

SOUTHERN DELIVERY SYSTEM
RAW WATER PIPELINE
SOUTH SECTION ONE

EROSION CONTROL AND EASEMENT PLANS

MISCELLANEOUS PARTIAL PLANS

SHEET	59
DWG	S1-EC-11
DATE	JULY 2011
PROJ	171473.20.SP

Colorado Springs Utilities Project Number: SDS-002 CSU Work Order Number: 1146977

FILENAME: SP105nEC11d_171473.dgn PLOT DATE: 8/4/2011 PLOT TIME: 3:50:53 PM

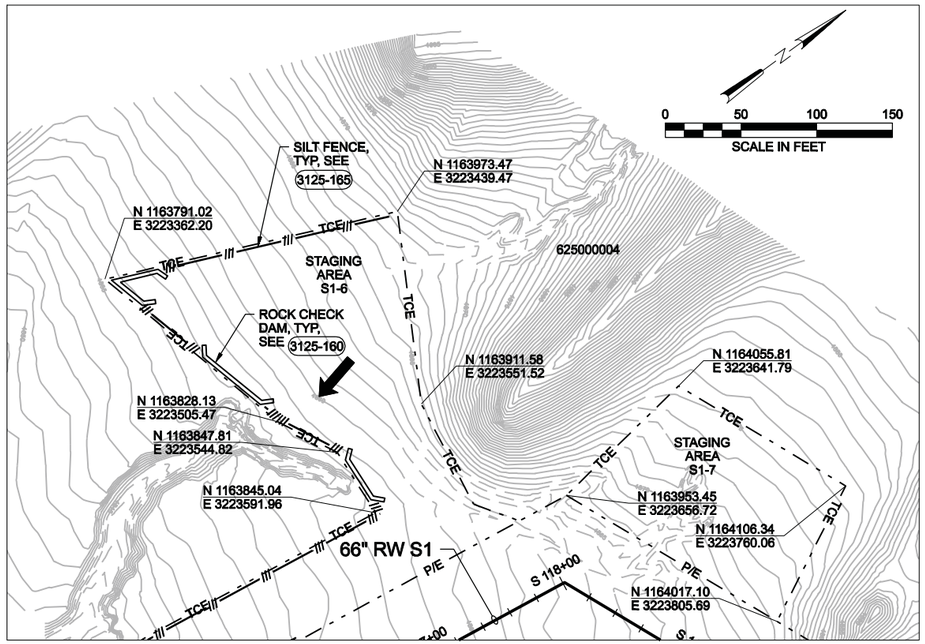

PARTIAL EASEMENT PLAN, SEE S1-PP-2

1

COLORADO LICENSED
JODY L. HENRY
39310
PROFESSIONAL ENGINEER

DSGN E FORD						VERIFY SCALE
DR B NORVILLE						BAR IS ONE INCH ON ORIGINAL DRAWING. 0 1" IF NOT ONE INCH ON THIS SHEET, ADJUST SCALES ACCORDINGLY.
CHK G SIMPSON	1	7/13/11	ADDENDUM NO. 1 - TCE ADDED	BN	JH	
APVD J HENRY	NO.	DATE	REVISION	BY	APVD	

CH2MHILL
Colorado Springs, CO 80903

SOUTHERN DELIVERY SYSTEM
RAW WATER PIPELINE
SOUTH SECTION ONE

EROSION CONTROL AND EASEMENT PLANS

MISCELLANEOUS PARTIAL PLANS

SHEET	59A
DWG	S1-EC-12
DATE	JULY 2011
PROJ	171473.20.SP

Colorado Springs Utilities Project Number: SDS-002 CSU Work Order Number: 1146977

FILENAME: SP105nEC12d_171473.dgn PLOT DATE: 7/25/2011 PLOT TIME: 12:03:39 PM

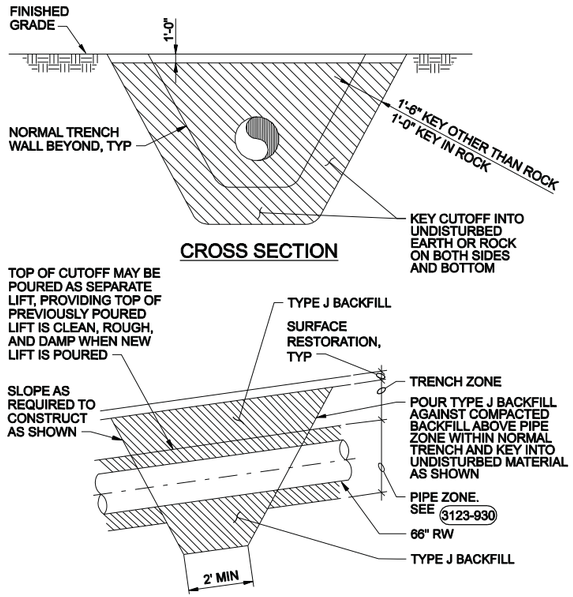

TRENCH PLUG

NTS

3123-900

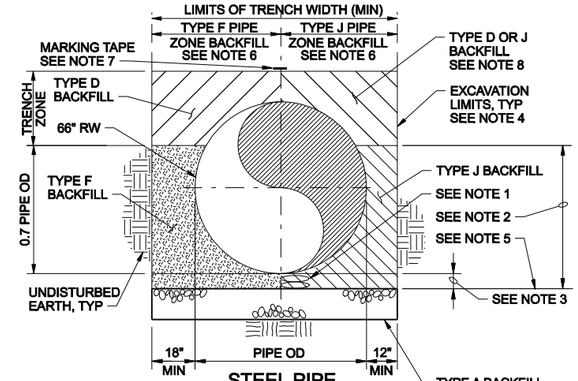

NOTES:

1. SAND BAG SUPPORTS IF TYPE J BACKFILL IS USED. PIPE BEDDING OTHERWISE.
2. PIPE ZONE.
3. PIPE BEDDING SHALL BE 6" MIN FOR TYPE J BACKFILL AND 8" MIN FOR TYPE F.
4. SLOPE TRENCH WALLS OR SHORE EXCAVATIONS FOR CONSTRUCTION SAFETY AND IN ACCORDANCE WITH OSHA REQUIREMENTS. FOR ROADWAY CROSSINGS, CONSTRUCTION PERMIT FROM ROADWAY OWNER WILL GOVERN THE USE OF SLOPED TRENCH SIDEWALLS.
5. DURING CONSTRUCTION, IF THE WATER TABLE IS DISCOVERED TO BE ABOVE THE TRENCH BOTTOM. NOTIFY THE ENGINEER, DEWATER AS SPECIFIED.
6. SEE 3123-930A, 3123-930B, 3123-930C, 3123-930D, & 3123-930E FOR TRENCH ZONE.
7. ~~INSTALL MARKING TAPE ONE FOOT ABOVE TOP OF PIPE.~~
8. INSTALL TYPE J BACKFILL TO 12" ABOVE TOP OF PIPE OR UP TO 12" BELOW EXST GRADE WHERE INDICATED ON DWGS. 1

TYPICAL PIPE ZONE

NTS

3123-930

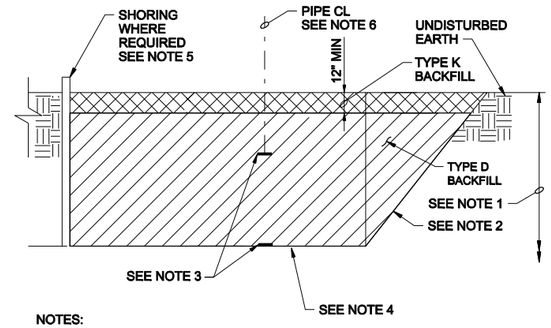

NOTES:

1. TRENCH ZONE.
2. SLOPE TRENCH WALLS OR SHORE EXCAVATIONS FOR CONSTRUCTION SAFETY AND IN ACCORDANCE WITH OSHA REQUIREMENTS.
3. INSTALL MARKING TAPE 2 FEET BELOW GRADE AND ONE FOOT ABOVE TOP OF PIPE AT CENTERLINE, AS INDICATED.
4. SEE 3123-930 .
5. REMOVE SHORING UNLESS OTHERWISE APPROVED BY THE CONSTRUCTION MANAGER.
6. LIMITS OF TRENCH WIDTH 3123-930 .

TRENCH ZONE - OPEN COUNTRY SURFACE RESTORATION

NTS

3123-930A

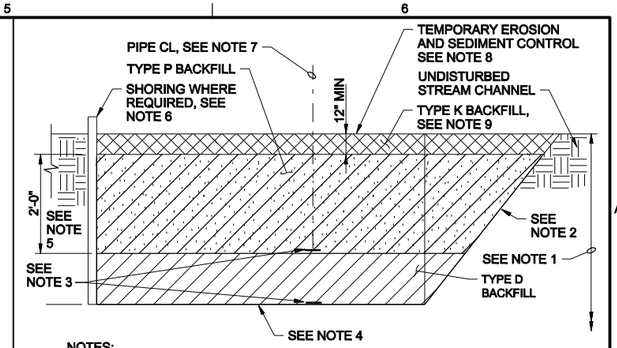

NOTES:

1. TRENCH ZONE.
2. SLOPE TRENCH WALLS OR SHORE EXCAVATIONS FOR CONSTRUCTION SAFETY AND IN ACCORDANCE WITH OSHA REQUIREMENTS.
3. INSTALL MARKING TAPE 2 FEET BELOW GRADE AND ONE FOOT ABOVE TOP OF PIPE AT CENTERLINE, AS INDICATED.
4. SEE 3123-930 .
5. INSTALL TYPE P BACKFILL IN TRENCH ZONE TWO FEET BELOW TYPE K BACKFILL.
6. REMOVE SHORING UNLESS OTHERWISE APPROVED BY THE CONSTRUCTION MANAGER.
7. LIMITS OF TRENCH WIDTH 3123-930.
8. INSTALL TEMPORARY EROSION AND SEDIMENT CONTROLS PER SPECIFICATION 01 57 13 TEMPORARY EROSION AND SEDIMENT CONTROLS.
9. USE NATIVE TOPSOIL FROM PROJECT SITE.

TRENCH ZONE - VEGETATED STREAM CHANNEL RESTORATION

NTS

3123-930B

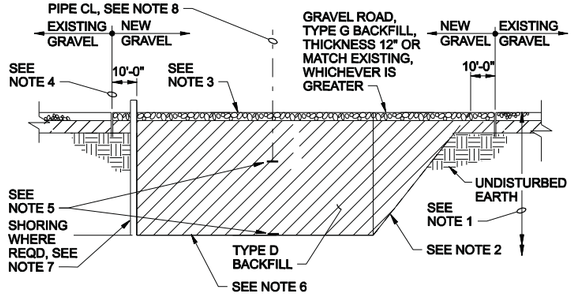

NOTES:

1. TRENCH ZONE.
2. SLOPE TRENCH WALLS OR SHORE EXCAVATIONS FOR CONSTRUCTION SAFETY AND IN ACCORDANCE WITH OSHA REQUIREMENTS. FOR ROADWAY CROSSINGS, CONSTRUCTION PERMIT FROM ROADWAY PERMITTING AUTHORITY WILL GOVERN THE USE OF SLOPED TRENCH SIDEWALLS.
3. REPLACE GRAVEL ROADWAY SECTION, MINIMUM THICKNESS 12".
4. EXTEND NEW GRAVEL 10 FEET OUTSIDE LIMITS OF TRENCH EXCAVATION EACH SIDE.
5. INSTALL MARKING TAPE 2 FEET BELOW GRADE AND ONE FOOT ABOVE TOP OF PIPE AT CENTERLINE, AS INDICATED.
6. SEE 3123-930.
7. REMOVE SHORING UNLESS OTHERWISE APPROVED BY THE CONSTRUCTION MANAGER.
8. LIMITS OF TRENCH WIDTH 3123-930.

TRENCH ZONE - GRAVEL SURFACE RESTORATION

NTS

3123-930C

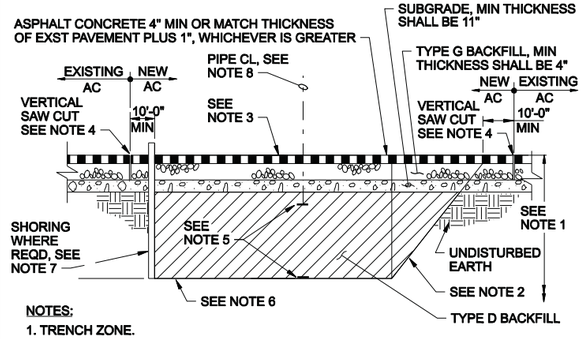

NOTES:

1. TRENCH ZONE.
2. SLOPE TRENCH WALLS OR SHORE EXCAVATIONS FOR CONSTRUCTION SAFETY IN ACCORDANCE WITH OSHA REQUIREMENTS. FOR ROADWAY CROSSINGS, CONSTRUCTION PERMIT FROM ROADWAY PERMITTING TRENCH SIDEWALLS.
3. REPLACE PAVED ROADWAY SECTION AS INDICATED.
4. CONDUCT SAW CUTS OF EXISTING PAVEMENT STRAIGHT, SQUARE AND PARALLEL TO THE TRENCH, A MINIMUM OF 10' OUTSIDE LIMITS OF TRENCH EXCAVATION. PAINT EDGE OF EXISTING ASPHALT WITH TACK COAT PRIOR TO PAVING. CRACK SEAL AFTER PAVING OPERATION.
5. INSTALL MARKING TAPE 4 FEET BELOW GRADE AND ONE FOOT ABOVE TOP OF PIPE AT CENTERLINE, AS INDICATED.
6. SEE 3123-930.
7. REMOVE SHORING UNLESS OTHERWISE DIRECTED BY THE CONSTRUCTION MANAGER.
8. LIMITS OF TRENCH WIDTH 3123-930 . PERMITTING AUTHORITY WILL GOVERN THE USE OF SLOPES AS INDICATED.

TRENCH ZONE - PAVED SURFACE RESTORATION

NTS

3123-930D

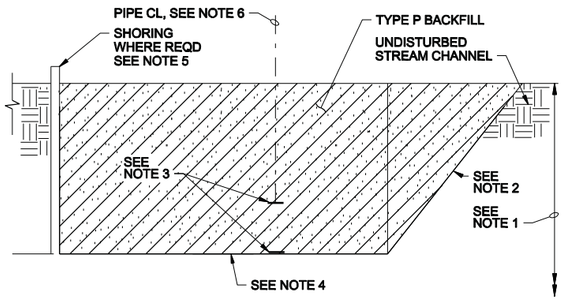

NOTES:

1. TRENCH ZONE.
2. SLOPE TRENCH WALLS OR SHORE EXCAVATIONS FOR CONSTRUCTION SAFETY IN ACCORDANCE WITH OSHA REQUIREMENTS.
3. INSTALL MARKING TAPE 3 FEET BELOW GRADE AND ONE FOOT ABOVE TOP OF PIPE AT CENTERLINE, AS INDICATED.
4. SEE 3123-930.
5. REMOVE SHORING UNLESS OTHERWISE APPROVED BY THE CONSTRUCTION MANAGER.
6. LIMITS OF TRENCH WIDTH 3123-930 .
7. IN SOME CASES CLSM MAY EXTEND INTO TRENCH ZONE.

TRENCH ZONE - NON-VEGETATED STREAM CHANNEL RESTORATION

NTS

3123-930E

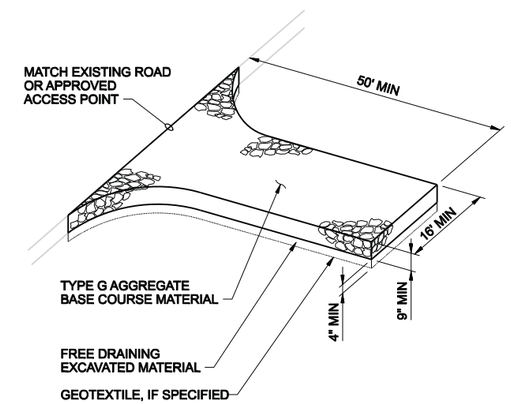

NOTES:

1. ADDITIONAL GRAVEL MAY HAVE TO BE ADDED PERIODICALLY TO MAINTAIN PROPER FUNCTION OF THE PAD.
2. REMOVE GRAVEL ENTRANCE AND REPLACE WITH NEW BASE COURSE PRIOR TO COMPLETION OF ACCESS ROAD
3. LOCATE AS REQUIRED WITHIN WORK LIMITS TO ACCOMODATE CONSTRUCTION.

GRAVEL CONSTRUCTION ENTRANCE

NTS

3125-130

COLORADO LICENSED
JODY L. HENRY
39310
PROFESSIONAL ENGINEER

DSGN	E FORD					
DR	B NORVILLE					
CHK	G SIMPSON	1	7/13/11	ADDENDUM NO. 1 - 3123-930 CHANGED	BN	JH
APVD	J HENRY	NO.	DATE	REVISION	BY	APVD

VERIFY SCALE
BAR IS ONE INCH ON ORIGINAL DRAWING.
0 1"
IF NOT ONE INCH ON THIS SHEET, ADJUST SCALES ACCORDINGLY.

CH2MHILL
Colorado Springs, CO 80903

SOUTHERN DELIVERY SYSTEM
RAW WATER PIPELINE
SOUTH SECTION ONE

STANDARD DETAILS

STANDARD DETAILS

SHEET	64
DWG	S1-SD-5
DATE	JULY 2011
PROJ	171473.20.SP

Documents for the Construction of the

SOUTHERN DELIVERY SYSTEM
RAW WATER PIPELINE S1

VOLUME 1 OF 2

SPECIFICATIONS

JULY 1, 2011

OWNER'S REPRESENTATIVE

JED CHAMBERS
COLORADO SPRINGS UTILITIES
121 S. TEJON, 3RD FLOOR
COLORADO SPRINGS, CO 80947
PHONE: (719) 668-9058
E-MAIL: jchambers@csu.org

ENGINEER'S REPRESENTATIVE

BRUCE J. SPILLER, P.E.
CH2M HILL
90 SOUTH CASCADE AVENUE, SUITE 700
COLORADO SPRINGS, CO 80903
PHONE: (719) 477-4914
FAX: (719) 634-9954
E-MAIL: bspiller@ch2m.com

COLORADO SPRINGS UTILITIES

COLORADO SPRINGS, COLORADO

DOCUMENTS

for the construction of the

SOUTHERN DELIVERY SYSTEM

RAW WATER PIPELINE S1

Contract No. xxxxxxxx

****

****

CH2M HILL

Colorado Springs, CO

July 1, 2011

Project No. 171473.20.S1

Copy No. _____

CONTENTS

Pages

SPECIFICATIONS (VOLUME 1 OF 2)

DIVISION 01—GENERAL REQUIREMENTS

Pages

Pages

DIVISION 09—FINISHES

DIVISION 10 THROUGH 25 (NOT USED)

DIVISION 26—ELECTRICAL

DIVISION 27 THROUGH 30 (NOT USED)

DIVISION 31—EARTHWORK

DIVISION 32—EXTERIOR IMPROVEMENTS

END OF SECTION

SECTION 01 11 00
SUMMARY OF WORK

PART 1 GENERAL

1.01 WORK COVERED BY CONTRACT DOCUMENTS

A. General: The Summary of Work is a brief description of the Work to be provided by the CONTRACTOR. This summary is not intended to be a complete listing of the Work required under this Contract. Complete the Work required by Contract Documents regardless of whether or not it is specifically listed here.

B. The completed Work will provide UTILITIES with a raw water pipeline from Station S 100+00 to Station S 325+21.87. Major items of work include:

1. Approximately 22,599 linear feet of 66-inch diameter welded steel pipe.
2. Six combination air release and vacuum valve assemblies and vaults with UTILITIES furnished valves as specified in Section 01 64 00, Owner-Furnished Products.
3. Five blowoff assemblies with UTILITIES furnished valves as specified in Section 01 64 00, Owner-Furnished Products.
4. Five buried access manways.
5. One vaulted access manway.
6. Approximately 309 linear feet of trenchless method pipeline crossing of Union Pacific railroad tracks with approximate 90-foot riser shaft at one end.
7. Pipeline cathodic protection system consisting of anodes, test stations, and appurtenance grounding mats.
8. Approximately 22,599 linear feet of fiber optic conduit and fiber optic handholes.
9. Surface grading.
10. Demolition of one structure.
11. Hydrostatic testing of pipeline and appurtenances including valves, flanged fittings, access manways, combination air and vacuum valves, and other appurtenances.
12. Connection to adjoining pipeline construction by others.

1.02 WORK NOT COVERED BY CONTRACT DOCUMENTS

A. Installation of fiber optic cable.

B. Revegetation.

C. Removal of erosion and sediment control BMPs.

D. Removal of temporary fencing.

E. Providing UTILITIES furnished valves as specified in Section 01 64 00, Owner-Furnished products.

PART 2 PRODUCTS (NOT USED)

PART 3 EXECUTION (NOT USED)

END OF SECTION

SECTION 01 14 13
ACCESS TO SITE

PART 1 GENERAL

1.01 GENERAL

A. UTILITIES has worked with property owners, both public and private, to understand the conditions of ingress and egress, security issues, and property control and protection issues regarding the property. Additionally, access routes to the site are limited to those routes that have been pre-approved by Pueblo County through the 1041 Permit and in the Memorandum of Understanding between UTILITIES and State of Colorado Division of Parks and Outdoor Recreation (DPOR). Abide by established mutually agreeable conditions of access between UTILITIES, Pueblo County, DPOR, and property owners as provided for herein.

B. Personnel accessing the Site are required to sign a statement provided by the CONSTRUCTION MANAGER signifying understanding of the conditions of access and that conditions will be abided.

C. Provide signs at gates and access points notifying individuals that specific conditions of entry exist. Ensure that the temporary construction easement and work limit boundaries are clearly marked throughout construction and that the necessary fencing to protect pets, livestock, or children from construction activities remains securely in place until original property fencing has been replaced to achieve substantial completion.

D. Grant access to enter the Site only to those individuals that have a legitimate work related need to access the property.

E. Provide vehicle registration information to CONSTRUCTION MANAGER for vehicles accessing Lake Pueblo State Parks. Obtain vehicle permit from CONSTRUCTION MANAGER. Display vehicle permit in vehicle upon entry and while in Lake Pueblo State Parks. Vehicle registration information includes:

1. Required dates for vehicle access.
2. Permit holder's name.
3. Company.
4. Vehicle description.
5. License plate information.

1.02 ACCESS

A. Construction Access Traffic Control: Comply with the access locations shown on Haul Route Plan on the Drawings and SDS Haul Route Plan accepted by Pueblo County. Obtain and submit required CONTRACTOR Pueblo County Access Permits.

B. Haul Route Plan: Comply with the Haul Route Plan shown on the Drawings and SDS Haul Route Plan accepted by Pueblo County and DPOR.

1. The Haul Route Plan identifies the roads to be utilized during construction for Construction Vehicle traffic.
   a. Construction Vehicle: Vehicles requiring operators to possess a Commercial Driver's License (CDL) and/or weighing more than 10,001 pounds.
2. Roads not identified on the approved Haul Route Plan are not to be utilized during construction for Construction Vehicle traffic under any circumstances unless approved by UTILITIES.
3. Lake Pueblo State Parks Haul Roads: Conduct a preconstruction and post construction condition assessment of roads with UTILITIES and DPOR.
   a. Provide sets of digital images in accordance with Section 01 32 34, Photographic and Video Documentation, of road conditions to UTILITIES.
   b. UTILITIES will review the preconstruction and post construction assessments in determining whether corrective measures are necessary.
   c. Implement the corrective measures that are required.
4. Maintain roads used as haul roads during construction such that they are passable by the motoring public except when identified in an approved Traffic Control Plan.
5. Comply with the Pueblo County Roadway Design and Construction Standards for road rehabilitation and maintenance work on roads used as haul roads.

PART 2 PRODUCTS (NOT USED)

PART 3 EXECUTION

3.01 TEMPORARY ACCESS ROADS

A. Construct temporary access roads in accordance with Section 01 55 13, Temporary Access Roads and Parking Areas, and as shown on the Drawings.

END OF SECTION

SECTION 01 14 19
USE OF SITE

PART 1 GENERAL

1.01 PROTECTION OF WORK AND PROPERTY

A. Inform CONSTRUCTION MANAGER of onsite accidents and related claims from property owners or the general public within the same day that the occurrence is identified.

B. Contact the Utility Notification Center of Colorado 3 business days prior to any excavation.

1.02 SUBMITTALS

A. Informational:

1. Pre-Existing Condition Assessment:
   a. Six (6) copies of the pre-existing conditions assessment in accordance with Article 3.01 of this section, of each property.
   b. Upon receipt, CONSTRUCTION MANAGER will review, sign, and distribute:
      1) One record copy of documentation to CONTRACTOR to be kept on file in field office.
      2) One record copy of documentation to UTILITIES.
      3) One record copy of the documentation to Pueblo County.
      4) One record copy of the documentation to the affected property owner for review and acceptance.
      5) One record copy of documentation to CONSTRUCTION MANAGER.
      6) One record copy of documentation to State of Colorado Division of Parks and Outdoor Recreation (DPOR).
   c. Such documentation will be used as indisputable evidence in ascertaining whether and to what extent damage occurred as a result of CONTRACTOR's operations, and is for the protection of adjacent property owners, CONTRACTOR, and UTILITIES.

PART 2 PRODUCTS (NOT USED)

PART 3 EXECUTION

3.01 PRE-EXISTING CONDITION ASSESSMENT

A. Examination:

1. After the effective date of the Agreement and before Work at the Site is started, perform an examination of pre-existing conditions of land surfaces, drainage, vegetation and structures adjacent to the Site that could be damaged or altered by construction operations with CONSTRUCTION MANAGER, UTILITIES, DPOR, and affected property owners attending if they choose. Identify three proposed dates for the pre-existing condition assessment for approval by the CONSTRUCTION MANAGER. Two of the three proposed dates shall be a weekend to allow CONSTRUCTION MANAGER to invite Property Owners to attend and witness the pre-existing condition assessment. Conform to photographic and video documentation requirements as specified in Section 01 32 24, Photographic and Video Documentation.
2. Perform periodic reexaminations to document any changes including, but not limited to cracks in structures, settlement, leakage, and similar conditions. Examinations may include photography, sampling and expert assessments of existing or current conditions.
3. Perform assessment of Lake Pueblo State Parks haul roads in accordance with Section 01 14 13, Access to Site.

B. Documentation:

1. Document examinations in writing and by photographs and audio-visual recordings as specified in Section 01 32 34, Photographic and Video Documentation.
2. CONSTRUCTION MANAGER will obtain property owner's written acceptance of recordings.

3.02 PROTECTION OF WORK AND PROPERTY

A. Perform work between the hours of 7:00 a.m. to 6:00 p.m., Monday through Friday. Work outside of these hours will be restricted to maintenance of traffic, safety, and construction controls, maintenance of construction equipment, and approved exceptions. Request approval from CONSTRUCTION MANAGER 4 working days in advance of work required to be performed outside of these hours. CONSTRUCTION MANAGER will notify Pueblo County, Division of Parks and Outdoor Recreation, and residences within 500 feet of the affected portion of the work 48 hours in

advance of work outside these hours, other than for maintenance or emergency work.

B. Support the CONSTRUCTION MANAGER and UTILITIES with notification of property owners. UTILITIES will notify property owners via certified mail 30 days prior to accessing the property from the CONTRACTOR's accepted baseline schedule. Notification will commence access to the temporary construction easement for the period of 1 year.

C. UTILITIES will notify property owners within 500 feet of the construction work with the distribution of door hangers approximately 7 days prior to construction.

D. Perform Work in a systematic manner that minimizes inconvenience to property owners and the public. Execute the schedule work in a linear construction process to accommodate UTILITIES notification to property owners ahead of construction activities. Restore and clean-up the site per Section 02 42 00, Restoration and Clean-Up, not more than 90 days following completion of major construction activities.

E. Do not cut off residence or business from vehicular traffic for a period exceeding 4 hours unless special arrangements have been made and approved by the CONSTRUCTION MANAGER. Whenever it is necessary to cross, close or obstruct roads, driveways, and walks, whether public or private, provide and maintain safe bridges, detours, or other temporary expedient access for accommodation of public and private travel.

F. Erect open excavation fence around open excavation areas with a minimum of 4 feet high standard orange safety fence with posts at intervals no larger than 20 feet. Erect work limit fences along work limits indicated on Drawings. Maintain fences as needed during construction period. Obtain CONSTRUCTION MANAGER's permission before removal of fencing. Fencing is temporary during construction, unless otherwise specified and is to be suitable to protect the general public from the construction activities.

G. Remove and relocate open excavation fencing as required around open excavations as the excavation and installation progresses.

H. Maintain in continuous service existing oil and gas pipelines, underground power, telephone or communication cable, water mains, irrigation lines, sewers, poles and overhead power, and other utilities encountered along line of the Work, unless other arrangements satisfactory to owners of said utilities have been made. Notify CONSTRUCTION MANAGER 5 days prior to planned utility outage.

I. Do not operate heavy equipment over any existing pipe when the earth cover is less than 3 feet.

J. Do not stockpile or dispose of excavated material over the existing Fountain Valley Authority conduit, except where indicated on Drawings.

K. Shore or bench excavations as required by OSHA regulations.

L. Inspect open excavation and trenches for compliance with safety plans and document in daily inspection reports.

M. Where completion of the Work requires temporary or permanent removal or relocation of existing utility, coordinate activities with owner of said utility and perform work to their satisfaction.

N. Protect, shore, brace, support, and maintain underground pipes, conduits, drains, and other underground utility construction uncovered or otherwise affected by construction operations.

O. Keep fire hydrants and water control valves free from obstruction and available for use.

P. In areas where operations are adjacent to or near a utility, such as gas, telephone, television, electric power, water, sewer, or irrigation system, and such operations may cause damage or inconvenience, suspend operations until arrangements necessary for protection have been made. Make necessary arrangements for protection.

Q. Notify CONSTRUCTION MANAGER and Utility Office Contact at least 5 days in advance of affecting a known existing utility. Before exposing a utility, obtain utility owner's permission. If service of any utility is interrupted as a result of CONTRACTOR's operation, notify proper authority immediately. Cooperate with said authority in restoring service as promptly as possible and bear any utility impacted costs incurred. Where overhead power lines are to be de-energized as part of the construction activities, notify the Utility and the CONSTRUCTION MANAGER in writing at least 3 weeks in advance and follow with a 5-day notice in advance of the power de-energizing requirement to complete the construction activity.

R. Do not impair operation of existing sewer system. Prevent construction material, pavement, concrete, earth, volatile and corrosive wastes, and other debris from entering sewers, pump stations, or other sewer structures.

S. Maintain or restore original Site drainage.

T. Schedule the Work so construction will not interfere with irrigation of cultivated lands or pasturelands. Construction may proceed during irrigation season, provided temporary irrigation ditches, turnouts, and miscellaneous structures acceptable to property owners are constructed.

U. Provide continuous access for livestock through farm areas. Do not cut off ready access to portions of farmlands in which livestock are pastured, fed, and watered. Provide alternate accessible water sources, if needed. Maintain existing fences required to restrain livestock. Keep gates closed and secure. Keep disturbance of livestock and wildlife to an absolute minimum as necessary for construction activities.

V. Work jointly with landowners and livestock owner to determine grazing areas, watering points and livestock pathways to food and water.

W. Temporarily relocate livestock away from construction activities if requested by livestock owner.

X. Maintain in continuous service existing oil and gas pipelines, underground power, telephone or communication cable, water mains, irrigation lines, sewers, poles and overhead power, and other utilities encountered along line of the Work, unless other arrangements satisfactory to owners of said utilities have been made.

Y. Sweep roadways, streets, and walkways affected by the work and adjacent to the work when necessary to remove construction-related dirt and dust.

3.03 SITE RESTORATION

A. Return disturbed land to pre-construction contours unless shown otherwise on the Drawings and prepare soil as specified in Section 32 91 13, Soil Preparation.

B. Restore roads and driveways so that:

1. Surfaces are finished to match existing surfaces.
2. Sealed roadways are finished to match existing seal (asphalt, spray seal, etc.).
3. Unsealed roadways match existing surface.
4. Concrete roadways/driveways match existing surface. Reconstruct portions of slab damaged or rendered unstable by undermining.

C. Promptly restore damaged or injured property including fences, gates and outbuildings, to a condition similar or better to that existing before the damage or injury occurred, by repairing, replacing, rebuilding, or restoring the property.

END OF SECTION

SECTION 01 22 13
UNIT PRICE MEASUREMENT AND PAYMENT

PART 1 GENERAL

1.01 SUBMITTALS

A. Schedule of Estimated Progress Payments:

1. Submit initial with first Application for Payment.
2. Submit adjustments thereto with each monthly Application for Payment.

B. Application for Payment.

C. Final Application for Payment.

1.02 SCHEDULE OF ESTIMATED PROGRESS PAYMENTS

A. Show estimated payment requests throughout Contract Times aggregating to initial Contract Price.

B. Base estimated progress payments on initially acceptable progress schedule. Adjust to reflect subsequent adjustments in progress schedule and Contract Price as reflected by modifications to the Contract Documents.

1.03 APPLICATION FOR PAYMENT

A. Transmittal Summary Form: Attach one Summary Form with each detailed Application for Payment for each schedule. Execute certification by an authorized officer of CONTRACTOR.

B. Use detailed Summary Form and Application for Payment Form suitable to CONSTRUCTION MANAGER.

C. Provide separate form for each schedule as applicable.

D. Include separate line item for each Change Order and Work Change Directive executed prior to date of submission. Provide further breakdown of such as requested by CONSTRUCTION MANAGER.

E. Preparation:

1. Round values to nearest dollar.
2. Submit Application for Payment, including a Transmittal Summary Form and detailed Application for Payment Form(s) for each schedule as applicable, a listing of materials on hand for each schedule as applicable, and such supporting data as may be requested by CONSTRUCTION MANAGER.

1.04 MEASUREMENT—GENERAL

A. If the quantity of a unit priced item varies by more than 25 percent above or below the quantity indicated in the Schedule of Unit Prices, and this variance in price causes the total Contract Price to vary by more than 2 percent of the total Contract amount, the CONTRACTOR, CONSTRUCTION MANAGER, or UTILITIES may request an equitable adjustment in the unit price of the item. The requesting party shall provide documentation as to why the cost should be adjusted and by how much. If the other parties deny the adjustment, the requesting party may file a claim under the Contract Agreement as applicable.

B. Weighing, measuring, and metering devices used to measure quantity of materials for Work shall be suitable for purpose intended and conform to tolerances and specifications as specified in National Institute of Standards and Technology, Handbook 44.

C. Whenever pay quantities of material are determined by weight, weigh material on scales furnished by CONTRACTOR. Weight must be certified accurate by the responsible agency. Obtain weight or load slip from weigher and deliver to CONSTRUCTION MANAGER at point of delivery of material.

D. If material is shipped by rail, car weights will be accepted provided that actual weight of material only will be paid for and not minimum car weight used for assessing freight tariff, and provided further that car weights will not be acceptable for material to be passed through mixing plants.

E. Weigh vehicles empty used to haul material being paid for by weight daily with full fuel tanks and at such additional times as required by CONSTRUCTION MANAGER. Each vehicle shall bear a plainly legible identification mark.

F. Measure in place those materials that are specified for measurement by cubic yard.

G. Units of measure shown on Bid Form to be as follows, unless specified otherwise.

Item	Method of Measurement
CY	Cubic Yards—Field Measure of volume by CONSTRUCTION MANAGER using mean length, width or radius, and depth
EA	Each—Field Count by CONSTRUCTION MANAGER
LF	Linear Foot—Field Measure by CONSTRUCTION MANAGER to the nearest whole foot or calculated from horizontal pipeline stationing shown on the Drawings.
LS	Lump Sum—Unit is one; no measurement will be made
SY	Square Yards—Field Measure of area by CONSTRUCTION MANAGER using mean length and width or radius
TN	Ton—Weight measure by scale (2,000 pounds)

H. Work Item Descriptions: Work item descriptions are provided below for the work items listed in Payment Schedule. The price bid for each work item shall cover costs in connection with the Work, including furnishing labor, materials, equipment, supplies, and appurtenances; providing construction plant equipment and tools; performing necessary labor and supervision to fully complete the Work as described and specified in the Contract Documents; and overhead and profit. Related work not specifically identified in the work item descriptions is considered incidental and a subsidiary obligation of the CONTRACTOR and costs in connection therewith shall be included in the price bid for work items. Typical incidental items may include, but are not limited to, construction administration, communications, and coordination with UTILITIES, CONSTRUCTION MANAGER, land owners, regulatory agencies, and other stakeholders, and quality control.

No.	Item	Description	Payment
1	Mobilization (LS)	Lump Sum Price bid includes costs for initial general condition items. These items include, but are not limited to, compliance with Section 01 71 13, Mobilization, and other required preconstruction tasks as the CONTRACTOR's onsite construction operations begin. Mobilization is limited to a maximum of 5 percent of the total bid. Any balance of cost beyond the maximum allowable amount for this line item will be paid as part of the CONTRACTOR's final invoice.	Payment will be made when mobilization is complete.

No.	Item	Description	Payment
2	Demobilization (LS)	Lump Sum Price bid includes moving equipment out, punch list walk through, and final walk through. Demobilization is required to be a minimum of 2 percent of the total bid.	Payment will be made with Final Payment.
3	Preconstruction Readiness Review (LS)	Lump Sum Price bid includes costs for attending and preparing information presented during a preconstruction readiness review meeting prior to commencement of construction.	Payment will be made when Preconstruction Readiness Review is complete.
4	Health and Safety (LS)	Lump Sum Price bid includes labor, equipment, and materials necessary to prepare, implement, and monitor the Health and Safety Plan and prepare required monitoring reports.	Lump sum payment will be distributed in equal monthly installments over the Contract Times stated in the Agreement.
5	Temporary Environmental Controls (LS)	Lump Sum Price bid includes costs for temporary environmental control measures, complete (except for Dust Control; Storm Water, Sediment, and Erosion Control; and Weed Control) including implementing and monitoring specified plans, and conformance to applicable permit and Specification requirements.	Lump sum payment will be distributed in equal monthly installments over the Contract Times stated in the Agreement.
6	Storm Water, Sediment, and Erosion Control (LS)	Lump Sum Price bid includes costs for storm water, sediment, and erosion control measures, complete; including installing and maintaining storm water, sediment, and erosion control measures, controlling storm water, and implementing and monitoring the Storm Water Management Plan, and conformance to applicable permit and Specification requirements.	Lump sum payment will be distributed in equal monthly installments over the Contract Times stated in the Agreement.

No.	Item	Description	Payment
7	Dust Control (LS)	Lump Sum Price bid includes costs for dust control, complete; including creating, implementing, and monitoring dust control plan, implementing and maintaining dust control measures, vehicle tracking control, sweeping paved streets, and conformance to applicable permit and Specification requirements.	Lump sum payment will be distributed in equal monthly installments over the Contract Times stated in the Agreement.
8	Weed Control (LS)	Lump Sum Price bid includes costs for weed control measures, complete.	Lump sum payment will be distributed in equal monthly installments over the Contract Times stated in the Agreement.
9	Security (LS)	Lump Sum Price bid includes costs for site security services, complete.	Lump sum payment will be distributed in equal monthly installments over the Contract times stated in the Agreement.
10	Traffic Control (LS)	Lump Sum Price bid includes costs for traffic control, complete; including developing traffic control plan, furnishing materials for implementing and monitoring the traffic control plan, and conformance to applicable permit and specification requirements.	Lump sum payment will be distributed in equal monthly installments over the Contract Times stated in the Agreement.
11	Work Limit Fencing (Orange Safety Fence) (LF)	Unit Price bid includes costs for furnishing, installing, and maintaining, work limit orange safety fencing and associated gates as indicated, complete.	Payment will be based on the linear feet installed along Work Limit boundary, not on additional fencing required for maintenance, repair, or replacement.

No.	Item	Description	Payment
12	Work Limit Fencing (Chain Link Fence) (LF)	Unit Price bid includes costs for furnishing, installing, and maintaining, work limit chain link fencing and associated gates as indicated, complete.	Payment will be based on the linear feet installed along Work Limit boundary, not on additional fencing required for maintenance, repair, or replacement.
13	Work Limits Preparation (LF)	Unit Price bid includes costs for clearing, grubbing, demolition, topsoil stripping and stockpiling, site preparation, removal of existing fence as indicated, construction and removal of temporary roads and staging areas, and constructing and maintaining paved and gravel construction entrances.	Payment will be based on the linear feet of work limits prepared based on pipeline stationing.
14	Permanent Fences (LF)	Unit Price bid includes costs for permanent fences, complete; including furnishing and installing permanent fences in areas where pipeline construction will impact existing permanent fences. Type of permanent fence to match existing fencing or as specified.	Payment will be based on the linear feet of fence installed, excluding gates.
15	Permanent Gates (EA)	Unit Price bid includes costs for each permanent gate, complete; including furnishing and installing gates as indicated.	Payment will be based on the number of permanent gates installed.
16	66-Inch Welded Steel Pipe Production for t=0.527-inch Wall (LF)	Unit Price bid includes production of 66-inch welded steel pipe and fittings with lining and coating complete in accordance with Section 33 05 01.02, Welded Steel Pipe and Fittings—Weld Before Backfill, as indicating on the Drawings; including manufacturing, factory testing, certification, storage, and delivery.	Payment will be based on pipeline stationing of pipe delivered to site.

No.	Item	Description	Payment
17	66-Inch Welded Steel Pipe Production for t=0.568-inch Wall (LF)	Unit Price bid includes production of 66-inch welded steel pipe and fittings with lining and coating complete in accordance with Section 33 05 01.02, Welded Steel Pipe and Fittings—Weld Before Backfill, as indicating on the Drawings; including manufacturing, factory testing, certification, storage, and delivery.	Payment will be based on pipeline stationing of pipe delivered to site.
18	66-Inch Welded Steel Pipe Production for t=0.609-inch Wall (LF)	Unit Price bid includes production of 66-inch welded steel pipe and fittings with lining and coating complete in accordance with Section 33 05 01.02, Welded Steel Pipe and Fittings—Weld Before Backfill, as indicating on the Drawings; including manufacturing, factory testing, certification, storage, and delivery.	Payment will be based on pipeline stationing of pipe delivered to site.
19	66-Inch Welded Steel Pipe Production for t=0.650-inch Wall (LF)	Unit Price bid includes production of 66-inch welded steel pipe and fittings with lining and coating complete in accordance with Section 33 05 01.02, Welded Steel Pipe and Fittings—Weld Before Backfill, as indicating on the Drawings; including manufacturing, factory testing, certification, storage, and delivery.	Payment will be based on pipeline stationing of pipe delivered to site.
20	66-Inch Welded Steel Pipe Production for t=0.692-inch Wall (LF)	Unit Price bid includes production of 66-inch welded steel pipe and fittings with lining and coating complete in accordance with Section 33 05 01.02, Welded Steel Pipe and Fittings—Weld Before Backfill, as indicating on the Drawings; including manufacturing, factory testing, certification, storage, and delivery.	Payment will be based on pipeline stationing of pipe delivered to site.

No.	Item	Description	Payment
21	66-Inch Welded Steel Pipe Production for t=0.734-inch Wall (LF)	Unit Price bid includes production of 66-inch welded steel pipe and fittings with lining and coating complete in accordance with Section 33 05 01.02, Welded Steel Pipe and Fittings—Weld Before Backfill, as indicating on the Drawings; including manufacturing, factory testing, certification, storage, and delivery.	Payment will be based on pipeline stationing of pipe delivered to site.
22	66-Inch Welded Steel Pipe Installation, Double Lap Weld or Butt Joint Weld, Weld Before Backfill (LF)	Unit Price bid includes installing 66-inch welded steel pipe and fittings complete, regardless of wall thickness; including pipe through vaults, carrier pipe through trenchless crossings, carrier pipe through open trench cased installations, trench excavation, shoring, pipe laying, backfilling (not including bedding and pipe zone), removal and disposal of excess soil, removal and disposal of soil and associated permitting at Asbestos Cement Pipeline crossing not designated to be replaced in accordance with Section 01 41 00, Demolition of Structures, Removal or Crossing of Asbestos Cement Pipe, soil compaction, double lap joint welds or butt joint welds before backfill, joint lining, joint coating in accordance with Section 09 81 12, Pipe Joint Coating—Weld Before Backfill, open excavation fencing, connections, crossing and protection of utilities, pipeline markers, and zinc grounding ribbons not associated with appurtenances. Cost for installing the 66-inch welded steel pipe in the riser shaft is included in Item 34.	Payment will be based on pipeline stationing of pipe installed and welded.

No.	Item	Description	Payment
23	CLSM Bedding and Pipe Zone Material (LF)	Unit Price bid includes furnishing and installing controlled low strength material (CLSM), Type J material, within the bedding and pipe zone areas excluding pipe zone material at combination air release and vacuum valve vaults (CARV), Special Access Manway, and blowoffs, complete, as indicated on the Drawings. Cost for bedding and pipe zone material at CARV locations is included in Items 28, 29, and 30. Cost for bedding and pipe zone material at the Special Access Manway location is included in Item 35. Cost for bedding and pipe zone material at blowoff locations is included in Items 31 and 32.	Payment will be based on pipeline stationing of CLSM installed less the length in CARV, Special Access Manway, and Blowoff appurtenance pay items.
24	Bedding and Pipe Zone Material (LF)	Unit Price bid includes furnishing and installing bedding and pipe zone material in areas excluding pipe zone material at combination air release and vacuum valve vaults (CARV), Special Access Manway, and blowoffs, complete. Cost for bedding and pipe zone material at CARV locations is included in Items 28, 29, and 30. Cost for bedding and pipe zone material at the Special Access Manway location is included in Item 35. Cost for bedding and pipe zone material at blowoff locations is included in Items 31 and 32.	Payment will be based on pipeline stationing of bedding and pipe zone material installed less the length in CARV, Special Access Manway, and Blowoff appurtenance pay items.
25	Trench Plug (EA)	Unit Price bid includes material and installation of CLSM trench plug, as indicated, complete.	Payment will be based on the number of trench plugs installed.
26	Dewatering (LF)	Unit Price bid includes control and disposal of groundwater from excavated areas within trench requiring dewatering in accordance with the Contract Documents, applicable regulations, and permit requirements.	Payment will be based on pipeline stationing requiring dewatering after dewatering is completed.

No.	Item	Description	Payment
27	Rock Excavation (CY)	Unit Price bid includes incremental additional cost to excavate materials classified as rock, measured in place.	Payment will be based on CY of rock excavated.
28	CARV Vault Type I – 6" CARV (EA)	Unit Price bid includes furnishing and installing 6" CARVs and Type I vault, complete; including furnishing and installing valves, concrete, exterior waterproofing, miscellaneous metals, miscellaneous piping, appurtenances, vent piping, access manways, excavation, drain rock, CLSM, imported fill, backfilling, compaction, and zinc ribbon grounding mats.	Payment will be made based on number of CARV vaults completed.
29	CARV Vault Type I – 8" CARV (EA)	Unit Price bid includes furnishing and installing 8" CARVs and Type I vault, complete; including furnishing and installing valves, concrete, exterior waterproofing, miscellaneous metals, miscellaneous piping, appurtenances, vent piping, access manways, excavation, drain rock, CLSM, imported fill, backfilling, compaction, and zinc ribbon grounding mats.	Payment will be made based on number of CARV vaults completed.
30	CARV Vault Type II – 12" CARV (EA)	Unit Price bid includes furnishing and installing 12" CARVs and Type II vault, complete; including furnishing and installing valves, concrete, exterior waterproofing, miscellaneous metals, miscellaneous piping, appurtenances, vent piping, access manways, excavation, drain rock, CLSM, imported fill, backfilling, compaction, and zinc ribbon grounding mats.	Payment will be made based on number of CARV vaults completed.

No.	Item	Description	Payment
31	Blowoff Assembly Type II with No Discharge Structure (EA)	Unit Price bid includes costs for furnishing and installing Blowoff Assemblies Type II, complete; including furnishing and installing valves, concrete, exterior waterproofing, miscellaneous metals, blowoff piping and fittings, pump well, excavating, bedding, CLSM, backfilling, compaction, zinc ribbon grounding mats, testing, restoration, and any other work and appurtenances needed to construct the blowoff assembly.	Payment will be made based on the number of blowoff assemblies completed.
32	Blowoff Assembly Type II with Discharge Structure Type B (EA)	Unit Price bid includes costs for furnishing and installing Blowoff Assemblies Type II, complete; including furnishing and installing valves, concrete, exterior waterproofing, miscellaneous metals, blowoff piping and fittings, pump well, Type B discharge structure, excavating, bedding, CLSM, backfilling, compaction, zinc ribbon grounding mats, testing, and any other work and appurtenances needed to construct the blowoff assembly.	Payment will be made based on the number of blowoff assemblies completed.
33	UPRR Tunnel (LF)	Unit Price bid includes tunneled crossing at UPRR, complete; including mechanical tunnel, furnishing and installing liner plate, excavations for installation, disposal of excess excavation material, monitoring, shoring, contact grouting, carrier pipe supports, installing 66-inch welded steel pipe, and backfill grouting of annular space. Cost for furnishing and installing Fiber Optic Conduit at UPRR Tunnel is included in Item 39.	Payment will be based on pipeline stationing of trenchless crossing installed.

No.	Item	Description	Payment
34	Riser Shaft (LS)	Unit Price bid includes riser shaft north of UPRR tunnel, complete; including mechanical riser shaft excavation, installing 66-inch welded steel pipe and specials in the riser shaft, excavations for installation, disposal of excess excavation material, monitoring, shoring, contact grouting, carrier pipe supports, and backfill grouting of annular space.	Payment will be based on completed installation of riser shaft.
35	Special Access Manway (EA)	Unit Price bid includes furnishing and installing Special Access Manway, complete; including furnishing and installing valves, concrete, exterior waterproofing, miscellaneous metals, miscellaneous piping, appurtenances, vent piping, access manways, excavation, drain rock, CLSM, imported fill, backfilling, compaction, and zinc ribbon grounding mats.	Payment will be made based on the number of special access manways completed.
36	Buried Access Manways (EA)	Unit Price bid includes buried access manways, complete; including furnishing and installing buried access manways, miscellaneous metals, testing, and work and appurtenances needed to construct the manway.	Payment will be made based on the number of manways installed.
37	Galvanic Anodes (EA)	Unit Price bid includes furnishing and installing anodes in accordance with the Contract Documents, complete.	Payment will be based on number of galvanic anodes installed.
38	Test Stations (EA)	Unit Price bid includes furnishing and installing test stations, complete.	Payment will be based on number of test stations installed.
39	Fiber Optic Conduit (LF)	Unit Price bid includes furnishing, installing, and testing three 1-1/4-inch fiber optic conduits, complete; including fiber optic conduits at UPRR Tunnel and Riser Shaft.	Payment will be based on the linear feet of triple conduit installed based on pipeline stationing.

No.	Item	Description	Payment
40	Fiber Optic Conduit Handholes (EA)	Unit price bid includes furnishing and installing fiber optic conduit handholes, complete.	Payment will be based on the number of handholes installed.
41	Restoration of Paved Roads (LF)	Unit Price bid includes restoration of paved roads, complete; including roadway removal and disposal, replacing existing roadway (base and asphalt) with asphalt surface up to 4 inches thick impacted by construction and areas of roadway damaged by construction to preconstruction conditions or Pueblo County standards, whichever is more stringent.	Payment will be based on pipeline stationing of completed restoration.
42	Additional Restoration of Paved Roads (CY)	Unit Price bid includes additional asphalt required for restoration of paved roads when existing asphalt thickness is greater than 4 inches thick. The initial 4 inches of asphalt replacement will be paid under Restoration of Paved Roads.	Payment will be based on volume of additional asphalt required and installed in excess of 4 inches.
43	Restoration of Gravel/Dirt Roads (LF)	Unit Price bid includes restoration of gravel and dirt roads, complete; including road removal and disposal, replacing existing roadways impacted by construction and areas of roadway damaged by construction to preconstruction conditions or Pueblo County standards, whichever is more stringent.	Payment will be based on pipeline stationing of completed restoration.
44	Soil Preparation of Disturbed Areas (LF)	Unit Price bid includes soil preparation of disturbed areas, complete; including replacing topsoil, replacing two track dirt roads, and final grading. Excludes tunnel crossings, pavement replacement, gravel replacement, and riprap armoring.	Payment will be based on pipeline stationing of completed soil preparation.
45	Riprap (TN)	Unit Bid Price bid includes furnishing and installing riprap armoring, complete; including riprap, geotextile, bedding, soil, subgrade preparation, topsoil, and installation.	Payment based on tons of riprap installed.

No.	Item	Description	Payment
46	Demolition of Structures (EA)	Unit Bid Price includes furnishing materials and work to demolish structures indicated on the Drawings, complete; including demolition, site preparation, salvaging of materials, sorting, loading, transporting, and disposal of demolition materials and debris.	Payment will be made after completion of demolition of the structures.
47	Asbestos Cement Pipeline Replacement (EA)	Unit Price bid includes costs for the replacement of portions of existing Pueblo West Metropolitan District (Pueblo West) ACP crossed, complete; including permitting, removal of existing Pueblo West ACP as shown in the Drawings, furnishing materials, labor, and equipment for replacing existing Pueblo West ACP with Ductile Iron Pipe (DIP), loading, transporting, and disposal of ACP and associated waste debris.	Payment will be based on the number of ACP crossings completed.
48	Foundation Stabilization (CY)	Unit Bid Price includes removal and disposal of unsuitable material, as directed by the CONSTRUCTION MANAGER, and replacement with Foundation Stabilization material.	Payment will be made on volume of unsuitable material removed as determined by field measurement.
49	Hydrostatic Testing (LS)	Lump Sum Price bid includes costs for hydrostatic testing, complete; including materials, installation and removal of temporary blowoff, water, equipment, disposal of water, and work for testing the pipeline and appurtenances.	Payment will be made after successful Hydrostatic Test.
50	Surface Stabilization of Disturbed Areas (LF)	Unit Price bid includes surface stabilization of disturbed areas, complete; including installation of mulch and erosion control blankets. Excludes tunnel crossings, pavement replacement, gravel replacement, two track dirt road replacement, and riprap armoring.	Payment will be based on pipeline stationing of completed surface stabilization.

PART 2 PRODUCTS (NOT USED)

PART 3 EXECUTION (NOT USED)

END OF SECTION

SECTION 01 24 13
VALUE ENGINEERING

PART 1 GENERAL

1.01 SUMMARY

A. This section applies to cost reduction proposals, hereinafter referred to as Value Engineering Cost Proposal (VECP), initiated and developed by CONTRACTOR to change requirements of the Contract for sole purpose of reducing total cost of construction. It is the intent that the VECP Construction Savings Amount, as defined herein, will be shared between CONTRACTOR and UTILITIES.

B. Identify VECP proposal as such at the time of submission to CONSTRUCTION MANAGER.

C. VECP, if adopted, shall result in a savings to UTILITIES by providing a decrease in cost for performing the Work without impairing any of the essential functions and characteristics such as service life, reliability, economy of operation, ease of maintenance, desired appearance, and safety features.

D. Do not base VECP solely upon a change in specified quantities.

E. Withdrawal of the whole or part of a submitted VECP will be allowed prior to acceptance by CONSTRUCTION MANAGER and UTILITIES.

1.02 SUBCONTRACT FLOW DOWN

A. Include these VECP provisions in subcontracts. VECP provisions may be included in subcontracts of lesser value. Subcontracts shall state that benefits accruing to CONTRACTOR as a result of an accepted VECP initiated by a Subcontractor shall be shared by CONTRACTOR and Subcontractor, in a manner specified in the subcontract. Concurrent contract savings on other UTILITIES contracts where Subcontractor is participating are not allowed.

1.03 DEFINITIONS

A. Collateral Savings: Measurable net reductions in UTILITIES' costs of operation that result from VECP including maintenance, logistics and UTILITIES-furnished equipment.

B. Concurrent Savings: Savings from other UTILITIES' contracts where CONTRACTOR is or is not participating.

C. CONTRACTOR Costs: Reasonable costs incurred by CONTRACTOR in preparing VECP and making the change, such as cancellation or restocking charges.

D. Future Contract Savings: Reductions in cost of performance of future contracts for essentially the same item resulting from VECP submitted by CONTRACTOR.

E. Gross Savings Amount: The gross savings amount to Contract, before deductions of UTILITIES and CONTRACTOR Costs.

F. VECP Construction Savings Amount: Net amount of Contract Price reduction to be realized by implementation of VECP; the Gross Savings Amount less UTILITIES and CONTRACTOR Costs.

G. UTILITIES Costs: Reasonable costs, including associated engineering costs, incurred by UTILITIES for evaluating and implementing VECP, such as redesign, testing, and effect on other contracts, including right of way acquisition costs.

1.04 AREAS NOT TO BE CONSIDERED

A. The following areas will not be considered for VECP submissions:

1. Reduction in pipe diameter.
2. Use of gasketed WSP.
3. Pipeline alignment change at the crossing of the Union Pacific Railroad tracks.

1.05 PREPROPOSAL SCREENING

A. Upon request, and with approval of CONSTRUCTION MANAGER, a preproposal screening meeting will be scheduled for CONTRACTOR to present anticipated proposal.

B. CONTRACTOR, CONSTRUCTION MANAGER, ENGINEER, UTILITIES and, if applicable, Subcontractor or Supplier will be present at meeting.

C. ENGINEER and UTILITIES will render a preliminary opinion as to relative merits of proposal during meeting. CONTRACTOR is not to assume acceptance of VECP based on ENGINEER or UTILITIES concurrence with merits of preliminary proposal.

D. If proposal is found to have merit, ENGINEER will confirm minimum technical content requirements to be submitted by CONTRACTOR with the intent to minimize proposal resubmittals.

E. Any VECP received that has not been introduced in a preproposal screening may be rejected without review.

1.06 VECP PROPOSAL SUBMITTAL

A. Prepare and submit four copies to CONSTRUCTION MANAGER.

B. Include, as a minimum, the following information with each VECP:

1. Description of the difference between existing Contract requirement and VECP.
2. Comparative advantages and disadvantages between Contract requirement and VECP.
3. Itemization of requirements of Contract that must be changed if VECP is adopted, and a recommendation as to how to make such change (e.g. drawing numbers and specifications).
4. Justification for change in function or characteristic of each affected item and effect of change on performance of end item.
5. Detailed cost estimate, with itemized breakdown containing quantities and unit prices for both original design and proposed change. Cost estimate shall include CONTRACTOR Costs, including amounts attributable to subcontracts. Basis for estimate shall also be included.
6. Prediction of effects VECP would have on UTILITIES Costs, such as additional engineering costs, UTILITIES-furnished equipment costs, costs of related items, and costs of maintenance and operation.
7. Statement of time by which a Change Order adopting VECP must be issued, so as to obtain maximum cost reduction and to avoid and minimize schedule extensions.
8. Proposed revisions to construction schedule, if any.

C. CONSTRUCTION MANAGER has right to reject, without review, any VECP that does not contain required documentation specified herein.

1.07 CONSTRUCTION SAVINGS SHARING

A. If VECP is accepted, or resulting deductive Change Order to Contract will be prepared in an amount equal to 40 percent of VECP Construction Savings Amount, determined as follows, V = G-(C+U), where:

G = Gross Savings Amount
C = CONTRACTOR Costs
V = VECP Construction Savings Amount
U = UTILITIES Costs

1.08 EXECUTABLE VECP

A. If the VECP is accepted, a deductive Change Order will be prepared, in accordance with this section and “change” clause of these Contract Documents, adjusting Contract Price and other affected provisions.

B. Unless and until a VECP Change Order is executed by both parties, CONTRACTOR shall remain obligated to perform in accordance with terms of the Contract.

C. Acceptance of VECP and performance of the Work thereunder shall not extend Contract Times, unless specifically provided for in the Change Order authorizing VECP.

D. CONTRACTOR's profit shall not be reduced by application of VECP.

E. CONTRACTOR is not entitled to share in concurrent, collateral, or future contract savings.

F. UTILITIES may accept, in whole or in part, submitted VECP. UTILITIES may modify a VECP, with concurrence of CONTRACTOR, to make it acceptable.

G. Neither UTILITIES nor ENGINEER shall be liable for delays in acting upon, or for failure to act upon, a submitted VECP.

H. Decisions of UTILITIES as to acceptance of VECP under these Contract Documents shall be final and shall not be subject to the "Claims" clause of Contract.

I. CONTRACTOR may restrict UTILITIES' right to use any portion of a VECP or its supporting data, submitted pursuant to this section, in accordance with the terms of the following if it is noted on such.

"These data are furnished pursuant to a value engineering change proposal and shall not be disclosed to an entity other than UTILITIES, CONSTRUCTION MANAGER, and ENGINEER, or be duplicated, used, or disclosed, in whole or in part, for any purpose other than to evaluate a value engineering change proposal. This restriction does not limit UTILITIES' right to use information contained in these data if it is or has been obtained from another source, or is otherwise available without limitations. If such a proposal is accepted by UTILITIES by issuance of a Change Order, UTILITIES shall have the right to duplicate, use and disclose any data pertinent to the proposal as accepted, in any manner and for any purpose whatsoever."

J. In the event of acceptance of VECP, CONTRACTOR hereby grants to UTILITIES all rights to use, duplicate or disclose in whole or part, in any manner and for purpose whatsoever, and to have or permit others to do so, any data reasonably necessary to fully utilize such proposal.

1.09 NONEXECUTABLE VECP

A. If VECP is not accepted, CONSTRUCTION MANAGER will notify CONTRACTOR in writing, explaining reasons. CONTRACTOR's costs of development of VECP are nonrecoverable in such an event.

B. In the event CONTRACTOR withdraws from VECP that has been previously agreed upon by all parties, ENGINEER's costs for evaluating VECP will be deducted from Contract Price via a Change Order.

PART 2 PRODUCTS (NOT USED)

PART 3 EXECUTION (NOT USED)

END OF SECTION

SECTION 01 29 73
SCHEDULE OF VALUES

PART 1 GENERAL

1.01 SCHEDULE OF VALUES

A. Schedule of values shall be based on the line items listed in the Bid Form and as indicated in Section 01 22 13, Unit Price Measurement and Payment.

B. Submit a proposed Schedule of Values for payment of lump sum pay items for CONSTRUCTION MANAGER approval. This Schedule of Values shall only be for items where payment is not otherwise identified in Specification Section 01 22 13, Unit Price Measurement and Payment.

C. Submit a proposed Schedule of Values for approval by the CONSTRUCTION MANAGER for Bid Adjustments contained within the Bid Form.

PART 2 PRODUCTS (NOT USED)

PART 3 EXECUTION (NOT USED)

END OF SECTION

SECTION 01 31 13
PROJECT COORDINATION

PART 1 GENERAL

1.01 SUBMITTALS

A. Informational:

1. Statement of Qualification (SOQ) for land surveyor or civil engineer.
2. Utility crossing plan specific to Fountain Valley Authority (FVA) water line crossing. This plan will be provided by the CONSTRUCTION MANAGER to the Bureau of Reclamation for review and acceptance.
3. Daily water use reports for construction water.
4. Plan for Pueblo West water line replacement. This plan will be provided by the CONSTRUCTION MANAGER to Pueblo West Metropolitan District.

1.02 RELATED WORK AT SITE

A. General:

1. Other work that is either directly or indirectly related to scheduled performance of the Work under these Contract Documents, listed henceforth, is anticipated to be performed at or near Site by others.
2. Coordinate the Work of these Contract Documents with work of others as specified in General Conditions.
3. Include sequencing constraints specified herein as a part of Progress Schedule.
4. Coordinate the Work of the Contract.

B. Other Contractors: Other contractors may be in the vicinity of the Project Site. Other work in the vicinity of this Project Site includes, but is not limited to:

1. Construction of adjacent reaches of the Southern Delivery System, Raw Water Pipeline.
2. Construction of the Southern Delivery System, Pueblo Dam Connection and associated construction. Associated construction includes construction of electrical power facilities and hydraulic operation facilities and improvements to the Pueblo West Pump Station.
3. Revegetation of Work Limits.
4. Coordinate the Work of these Contract Documents with work of others as specified in General Conditions.
5. Include sequencing constraints specified herein as a part of Progress Schedule.
6. Coordinate the Work of the Contract.

1.03 UTILITY NOTIFICATION AND COORDINATION

A. Coordinate the Work, including, but not limited to, crossing requirements, excavation requirements, utility support during Work, excavation and backfill requirements, and marking tape requirements with various utility owners within Project limits. Notify applicable utility owners prior to commencing Work, if damage occurs, or if conflicts or emergencies arise during Work. Contact Utility Notification Center of Colorado (Call 1-800-922-1987 or 811) 3 business days prior to any excavation. Comply with Utility agreements and permits. The following is a listing of known utility owners and governing jurisdictions in the project area:

1. Power Companies:
   a. Black Hills Energy: Lance Peters, lance.peters@blackhillscorp.com, (719) 546-6419.
      1) Notify Black Hills Energy in writing at least 30 days in advance and follow up with a 5-day written notice in advance of any crossing of their utilities. In addition, notify Black Hills Energy in accordance with Section 01 14 19, Use of Site.
   b. San Isabel: Randy Bryan (719) 547-2160.
2. Fiber Optics/Telephone:
   a. Qwest: Sally Klein, sally.klein@quest.com, (719) 636-4329.
   b. Southeast Colorado Power Association (SECPA): Kevin Brandon, kevinb@secpa.com, (719) 383-1323.
3. Water/Sewer:
   a. FVA: Mike Urban, murban@csu.org, (719) 668-9090.
      1. Submit to CONSTRUCTION MANAGER utility crossing plan specific to FVA water line crossing within 30 days from Notice to Proceed. Include excavation plans, schedules, type and weight of the construction equipment to be used for crossing proposed utility support for FVA water, equipment to be used, backfill material, and other information as requested by the CONSTRUCTION MANAGER. Follow requirements in Engineering and O&M Guidelines for Crossings, Bureau of Reclamation Water Conveyance Facilities provided in the Bidder's Library.
      2. Notify Fountain Valley Authority 2 weeks and 48 hours prior to excavation at utility crossing locations.
   b. Pueblo West Metropolitan District: Dan Higgins, dhiggins@pwmd-co.us, (719) 250-9169.
      1) Notify Pueblo West Metropolitan District 10 working days prior to crossing water lines. Submit to CONSTRUCTION MANAGER specific plan for Pueblo West water line replacement 60 days prior to replacing Pueblo West water line construction. Include plan for temporary connection, demolition, and disinfection.

c. Lake Pueblo State Parks: Brad Henley, (719) 561-9320, ext. 12.

4. Roads:
   a. Lake Pueblo State Parks: Brad Henley, (719) 561-9320, ext. 12.
   b. Pueblo County Public Works (Pueblo County): Dave Benbow, benbow@co.pueblo.co.us, (719) 583-4753.
   c. CONSTRUCTION MANAGER to coordinate communication with Pueblo County.

B. Water for Construction and Hydrostatic Testing:

1. Obtain water from one of the following:
   a. FVA:
      1) Cost for service will be:
         a) $2.78/day customer charge.
         b) $4/day meter charge.
         c) Water charge of $356.58/acre-foot.
      2) Location of Water Source: Three blowoff locations on the FVA water line as shown on Drawings:
         a) Drawing S1-G-7
         b) Drawing S1-PP-18
         c) Drawings S1-PP-12 and S1-EC-11
      3) Maximum Flow Rate: 1,250 gpm.
      4) CONTRACTOR is responsible for piping and appurtenances beginning at the exposed flange at FVA blowoff(s).
      5) Backflow into the FVA blowoff(s) is not allowed. Provide, install, and test backflow device.
      6) Water for Construction: Water may be obtained from FVA. Storage for construction water must be provided. Approval must be obtained from FVA prior to use. Notify and obtain approval and authorization for usage and storage methods from FVA 2 weeks in advance prior to using water for construction activities.
      7) Install security measures so that appurtenances are not vandalized.
      8) Install freeze protection to the FVA water line during winter months when using the FVA source for construction water.
      9) Disconnect any connections to the FVA water line when not in use.
      10) Submit daily water use reports to the CONSTRUCTION MANAGER.
      11) Use of FVA blowoff shown on DWG S1-G-7 will not be available for use after May 31, 2012.
   b. CONTRACTOR obtained source of water for hydrostatic testing: Submit source for CONSTRUCTION MANAGER approval. Water is not available from Lake Pueblo State Park's facilities.

1.04 EMERGENCY PREPAREDNESS

A. Emergency Response Contacts:

1. First Responders: 911.
2. Responding Fire Department:
   a. Pueblo West Fire Department:
      1) Address: 51 East Hahns Peak Avenue, Pueblo West, CO 81007.
      2) Telephone: (719) 547-7337.
3. Parkview Medical Center:
   a. Address: 2525 Mountainview Drive, Pueblo, CO 81008.
   b. Telephone: (719) 549-7650.
4. Law Enforcement in Pueblo Dam State Park:
   a. State Patrol Dispatch:
      1) Telephone: (719) 544-2424

1.05 PROJECT MILESTONES

A. General: Include the Milestones specified herein as a part of the Progress Schedule required under Section 01 32 16, Construction Progress Schedule.

B. Project Milestones: Generally described in the Agreement Form. The following is a description of each:

1. Release of the Temporary Construction Easement to the Revegetation Contractor.
2. Substantial Completion: Complete Work in the Contract Documents with the exception of Section 01 77 00, Closeout Procedures, Paragraph 1.01.B.a, b, c, d, e, and f, and punch list items.
3. Final Completion: Complete work in the Contract Documents.

1.06 WORK SEQUENCING/CONSTRAINTS

A. General:

1. The construction constraints presented herein are intended to describe the sequence of critical events necessary to minimize disruption to the public, UTILITIES, and other agency facilities, to properly coordinate between related contracts, and to comply with permit and easement requirements. The critical events described are not all inclusive and additional items of work not described may be required to minimize disruption and ensure compliance with the Contract Documents and permit and easement requirements. Deviation from or modification of the specified sequences/constraints may be permitted if other techniques and methods will facilitate construction and reduce facilities disruption. Submit proposed deviations or modifications to CONSTRUCTION MANAGER for review in accordance with procedures for schedule

revisions procedures specified in Section 01 32 16, Construction Progress Documentation.

2. Allow for construction and schedule constraints in preparing the construction schedules required in Section 01 32 16, Construction Progress Documentation. Include activities necessary to satisfy the constraints and permit and easement requirements included and referenced in the Contract Documents.

B. Work Outside Regular Hours:

1. Certain shutdowns and tie-ins may only be permissible at times other than regular working hours, such as nights or weekends. Refer to working hours specified in Section 01 14 19, Use of Site.
2. Coordinate shutdowns and connections with CONSTRUCTION MANAGER and utility company affected.

C. Sequencing and Constraints:

1. Demolition: The Work includes demolition prior to installation of portions of the 66-inch raw water pipeline.
   a. Demolition of structures described in the Drawings.
2. Pueblo West Metropolitan District Asbestos Cement Pipeline Waterline Removal and Replacement: Coordinate work with Pueblo West Metropolitan District. Sequence of work is specified on the Drawings.

1.07 FACILITY OPERATIONS

A. Continuous operation of existing facilities, utilities, and roadways is of critical importance. Schedule and conduct activities to enable existing facilities to operate continuously, unless otherwise specified.

B. Include the sequencing constraints specified herein as part of the progress schedule.

C. Perform Work continuously during critical connections and changeovers, and as required to prevent interruption of existing operations.

D. When necessary, plan, design, and provide various temporary services, utilities, connections, temporary piping and heating, access, and similar items to maintain continuous operations of facilities within the Work Limits.

E. Do not close lines, open or close valves, or take other action that would affect the operation of existing systems, except as specifically required and authorized by the Contract Documents and after authorization by facility owner and CONSTRUCTION MANAGER. Such authorization will be considered within 48 hours after receipt of CONTRACTOR's written request.

F. Do not proceed with Work affecting a facility's operation without obtaining facility owner and CONSTRUCTION MANAGER's advance approval of the need for and duration of such Work.

G. Relocation of Existing Facilities:

1. During construction, it is expected that minor relocations of Work may be necessary.
2. Provide complete relocation of existing structures and underground facilities, including piping, utilities, equipment, structures, electrical conduit and wiring, electrical duct bank, and other necessary items.
3. Use only new materials for relocated facility. Match materials of existing facility, unless otherwise shown or specified.
4. Perform relocations to minimize downtime of existing facilities.
5. Install new portions of existing facilities in their relocated position prior to removal of existing facilities, unless otherwise approved by CONSTRUCTION MANAGER and facility owner.
6. Support and protect utilities that cannot be relocated and taken out of service during Work.

1.08 REFERENCE POINTS AND SURVEYS

A. Location and elevation of bench marks are shown on Drawings.

B. CONTRACTOR's Responsibilities:

1. Provide survey required to layout the Work.
2. Check and establish exact location of existing facilities prior to construction of new facilities and any connections thereto.
3. In event of discrepancy in data provided on Drawings, request clarification before proceeding with Work.
4. Retain professional land surveyor licensed in the State of Colorado to perform or supervise engineering surveying necessary for construction staking and layout.
5. Maintain complete accurate log of survey work as it progresses.
6. On request of CONSTRUCTION MANAGER, submit documentation.

1.09 COORDINATION WITH REVEGETATION CONTRACTOR

A. UTILITIES will contract with a Revegetation Contractor. Upon Substantial Completion, Revegetation Contractor will assume responsibility for Stormwater Pollution, Erosion and Sediment Control and Dust Control. Coordinate with Revegetation Contractor to transfer or reassign applicable permits.

B. Leave BMPs and temporary Work Limit Fencing in place. Within 14 days of anticipated Substantial Completion, CONTRUCTION MANAGER will inspect BMPs and temporary Work Limit Fencing with CONTRACTOR and

Revegetation Contractor. Make repairs to BMPs and fencing to restore them to a condition to serve their intended purposes. Clean BMPs that are greater than 25 percent full.

C. Coordinate transfer of site security (lock controlled access points) to Revegetation Contractor.

D. Coordinate access to site with Revegetation Contractor for punch list and warranty work.

PART 2 PRODUCTS (NOT USED)

PART 3 EXECUTION

3.01 CUTTING, FITTING, AND PATCHING

A. Cut, fit, adjust, or patch Work and work of others, including excavation and backfill as required, to make Work complete.

B. Obtain prior written authorization of CONSTRUCTION MANAGER before commencing Work to cut or otherwise alter:

1. Structural or reinforcing steel, structural column or beam, elevated slab, trusses, or other structural member.
2. Weather- or moisture-resistant elements.
3. Efficiency, maintenance, or safety of element.
4. Work of others.

C. Refinish surfaces to provide an even finish.

1. Refinish entire assemblies.
2. Finish restored surfaces to such grades and lines, planes, shapes, and textures that no transition between existing work and Work is evident in finished surfaces.

D. Restore existing work, Underground Facilities, and surfaces that are to remain in completed Work including concrete-embedded piping, conduit, and other utilities as specified and as shown.

E. Make restorations with new materials and appropriate methods as specified for new Work of similar nature; if not specified, use recommended practice of manufacturer or appropriate trade association.

F. Fit Work airtight to pipes, sleeves, ducts, conduit, and other penetrations through surfaces and fill voids.

G. Remove specimens of installed Work for testing when requested by CONSTRUCTION MANAGER.

3.02 HOMEOWNER PROPERTY RESTORATION

A. When the CONTRACTOR notifies the CONSTRUCTION MANAGER that the project has achieved Substantial Completion, the CONSTRUCTION MANAGER will notify the property owners via registered mail to submit remaining non-revegetation restoration items. If approved by CONSTRUCTION MANAGER, these restoration items will become part of the Punch List for action and completion by the CONTRACTOR.

END OF SECTION

SECTION 01 31 19
PROJECT MEETINGS

PART 1 GENERAL

1.01 GENERAL

A. Unless otherwise noted, CONSTRUCTION MANAGER will schedule physical arrangements for meetings throughout progress of the Work, prepare meeting agenda with regular participant input and distribute with written notice of each meeting, preside at meetings, record minutes to include significant proceedings and decisions, and reproduce and distribute copies of minutes after each meeting to participants and parties affected by meeting decisions.

1.02 PRE-MOBILIZATION READINESS REVIEW

A. Before the Preconstruction Conference and prior to mobilization of construction equipment and personnel to the Site, UTILITIES will schedule a readiness review meeting. As a minimum, be prepared to demonstrate the following:

1. Safety Management and Emergency Preparedness policies and procedures.
2. Quality Assurance/Quality Control programs and procedures.
3. Environmental Constraints Plan.
4. Required local, state, and federal permits and agency approvals have been acquired, and that the CONTRACTOR is aware of permit requirements and limitations, and appropriate CONTRACTOR policies and procedures are in place to ensure compliance.
5. Site Safety Training and Environmental Awareness Training.
6. Site and security controls are in place.
7. Communications systems are in place and operational.
8. Temporary facilities are in place where required.
9. CONTRACTOR's safety plan and representative are in place.
10. Understanding and acceptance of property owner access agreements.

B. CONSTRUCTION MANAGER will verify that:

1. Land, easement, and right-of-way acquisitions are complete and will highlight any limitations related to Project access.
2. Agency approvals have been obtained, including pertinent Pueblo County approvals.

C. Attendees may include:

1. UTILITIES' representatives.
2. Pueblo County representatives.
3. Bureau of Reclamation representatives.
4. Lake Pueblo State Park representatives.
5. CONTRACTOR's office representative.
6. CONTRACTOR's resident superintendent.
7. CONTRACTOR's quality control representative.
8. CONTRACTOR's project engineer.
9. CONTRACTOR's public communications officer.
10. CONTRACTOR's health and safety officer.
11. CONTRACTOR's Environmental Representative.
12. CONSTRUCTION MANAGER and ENGINEER's representatives.
13. Subcontractors' representatives whom CONTRACTOR may desire or CONSTRUCTION MANAGER may request to attend.
14. Others as appropriate.

1.03 PRECONSTRUCTION CONFERENCE

A. After the Pre-Mobilization Readiness Review, CONSTRUCTION MANAGER will schedule and make physical arrangements for the Preconstruction Conference, prepare and distribute the agenda, preside at the conference, record minutes to include significant proceedings and decisions, and reproduce and distribute copies of minutes. Discuss the following subjects, as a minimum:

1. Required schedules.
2. Status of Bonds and insurance.
3. Sequencing of critical path work items.
4. Progress payment procedures.
5. Project changes and clarification procedures.
6. Use of Site, access, security and temporary facilities.
7. Major product delivery and priorities.
8. CONTRACTOR's safety plan and representative.

B. Attendees may include:

1. UTILITIES' representatives.
2. CONTRACTOR's office representative.
3. CONTRACTOR's project engineer.
4. CONTRACTOR's resident superintendent.
5. CONTRACTOR's quality control representative.
6. CONTRACTOR's public communications officer.
7. CONTRACTOR's health and safety officer.
8. Subcontractors' representatives whom CONTRACTOR may desire or CONSTRUCTION MANAGER may request to attend.

9. CONSTRUCTION MANAGER and ENGINEER's representatives.
10. Others as appropriate, including representatives from appropriate entities.

1.04 PROGRESS MEETINGS

A. CONSTRUCTION MANAGER will schedule weekly progress meetings to review Work progress, Progress Schedule, Schedule of Submittals, Application for Payment, contract modifications, and other matters needing discussion and resolution.

B. Attendees may include:

1. UTILITIES' representative(s), as appropriate.
2. CONTRACTOR, Subcontractors, and Suppliers, as appropriate.
3. CONSTRUCTION MANAGER and ENGINEER's representatives.
4. Others as appropriate.

1.05 QUALITY CONTROL MEETINGS

A. In accordance with Section 01 45 16.13, Contractor Quality Control.

B. Scheduled by CONSTRUCTION MANAGER on a monthly basis or as necessary to review test and inspection reports, and other matters relating to quality control of the Work and work of other contractors. If possible, these meetings will be scheduled to follow immediately after the Progress Meetings.

C. Attendees may include:

1. UTILITIES' representative(s), as appropriate.
2. CONTRACTOR.
3. CONTRACTOR's designated quality control representative.
4. Subcontractors and suppliers, as necessary.
5. CONSTRUCTION MANAGER's representatives.

1.06 PREINSTALLATION MEETINGS

A. When required in individual Specification sections, convene at Site prior to commencing the Work of that section.

B. Require attendance of entities directly affecting, or affected by, the Work of that section.

C. Notify CONSTRUCTION MANAGER 7 days in advance of meeting date.

D. Provide suggested agenda to CONSTRUCTION MANAGER with notification of proposed meeting date to include reviewing conditions of installation, preparation and installation or application procedures, and coordination with related Work and work of others.

1.07 OTHER MEETINGS

A. In accordance with Contract Documents and as may be required by CONSTRUCTION MANAGER.

PART 2 PRODUCTS (NOT USED)

PART 3 EXECUTION (NOT USED)

END OF SECTION

SECTION 01 31 24
PUBLIC COMMUNICATIONS

PART 1 GENERAL

1.01 GENERAL

A. Do not issue any news releases, or make any arrangements for publicity, related to the UTILITIES' SDS contracts to any news media without prior approval of UTILITIES.

B. Support UTILITIES and CONSTRUCTION MANAGER in preparing, coordinating, and conducting Project open houses and local community meetings.

C. UTILITIES' contacts for public communications are:

Margaret Radford
Work: (719) 668-4805
Mobile: (719) 290-0558
e-mail: MRadford@csu.org

and

David Marciniak
Work: (719) 668-3595
Mobile: (719) 291-2481
e-mail: DMarciniak@csu.org

PART 2 PRODUCTS (NOT USED)

PART 3 EXECUTION

3.01 GENERAL

A. The CONTRACTOR is to have limited contact and communication with the residents and general public and is expected to fulfill the public relations expectations set by the CONSTRUCTION MANAGER and UTILITIES.

B. The expectations include minimizing the disruption to residents throughout the construction phase by maintaining a tidy, well managed construction work area; safeguarding the public from construction activities and equipment with reasonable measures; minimizing and protecting the attractive nuisance of construction equipment and materials within the work area; providing notification of when the work is expected to start and maintaining the restoration schedule to commence within 90 days of the start of construction

on any residential segment; promptly closing out residential complaints identified on the punchlist.

C. UTILITIES and the CONSTRUCTION MANAGER will provide notification to residents by means of neighborhood meetings, website, 24/7 hotline and mailings as needed.

D. Report contact with residents and the general public to the CONSTRUCTION MANAGER and UTILITIES' contact for public communications the same working day as the contact is made. Provide UTILITIES' contact with information regarding the nature of the contact, contact information, if provided, location, and comments regarding the contact.

E. Report contact with the media to the CONSTRUCTION MANAGER and UTILITIES' contact for public communication within 1 hour of when contact is made.

F. In the absence of UTILITIES' public communication contact and CONSTRUCTION MANAGER, do not communicate with the media.

G. Release to UTILITIES and the CONSTRUCTION MANAGER unrestricted right and permission to copyright and use, re-use, publish, and republish photographic portraits or pictures, as well as video, of the CONTRACTOR and CONTRACTOR's Subcontractors.

H. Permit the use of any CONTRACTOR's or CONTRACTOR's Subcontractor's printed material in connection therewith and relinquish any right that the CONTRACTOR and CONTRACTOR's Subcontractors may have to examine or approve the completed product or products or the advertising copy or printed matter that may be used in conjunction therewith or the use to which it may be applied.

END OF SECTION

SECTION 01 32 16
CONSTRUCTION PROGRESS SCHEDULE

PART 1 -- GENERAL (NOT USED)

PART 2 -- DEFINITIONS

A. Progress Schedule: The accepted baseline schedule for the construction contract, demonstrating the planned activities, activity costs, and activity durations as the Project was bid.

B. Cash Flow: For construction costs, reflects scheduled expenditures based on activity cost loading. This is the anticipated CONTRACTOR billings (gross) before the withholding of retention, and is estimated by the CONTRACTOR.

C. Early Finish: The earliest a schedule activity is expected to finish, based on its relationship (logic) to other activities in the project.

D. Early Start: The earliest a schedule activity is expected to start, based on its relationship (logic) to other activities in the project.

E. Late Finish: The latest a schedule activity can finish, based on its relationship (logic) to other activities on the project, and still permit the project to be completed on time.

F. Late Start: The latest a schedule activity can start, based on its relationship (logic) to other activities on the project, and still permit the project to be completed on time.

G. Original Duration: The amount of time, in calendar days, an activity was expected to take to complete at the beginning of a project.

H. Preliminary Progress Schedule: Covers construction related activities from Notice to Proceed up through Notice to Proceed plus 90 days.

I. Total Float: The number of days by which a part of the Work in the construction schedule may be delayed from its early start/finish dates without necessarily extending the contract completion date.

J. Work Activity: An activity which requires time and resources to complete and must be performed before the Contract is considered complete.

PART 3 -- SUBMITTALS (NOT USED)

PART 4 -- QUALIFICATIONS

A. The CONTRACTOR shall employ a trained and experienced construction scheduling person knowledgeable in construction Work sequencing, productivity, scheduling, and application of the scheduling software system. This person, along with the CONTRACTOR's management team is expected to work closely with the CONSTRUCTION MANAGER to deliver acceptable products outlined in this section and comply with the reporting requirements of this section.

PART 5 -- CRITICAL PATH NETWORK

A. The Critical Path Method (CPM) type construction schedule will be used to monitor job progress. The CONTRACTOR shall be responsible for providing all information concerning the sequencing, logic and duration of all activities as well as providing the initial CPM logic network (in electronic and paper form) diagram and tabular report data.

B. Software shall be Primavera P6 Project Management Release 7.0 used in conjunction with Contract Manager.

C. The CPM Logic Diagrams shall be plotter drawn CPM logic diagrams and submitted on sheets 22 inches by 36 inches or as otherwise directed by the CONSTRUCTION MANAGER. The activity box shall include, as a minimum, the activity number, activity description, original durations and total float. Logic diagrams shall be submitted until both the Preliminary and Progress Schedules are accepted.

D. The activities contained within the schedules will be cost loaded to equal the Contract Price. Overhead and profit shall be prorated on all activities for the entire project length. The CONTRACTOR shall not unbalance the activity cost loading.

E. The CONTRACTOR shall collect data and information from Subcontractors, Suppliers, and equipment manufacturers for incorporation into the construction schedule.

F. The Work activities comprising the schedule shall be of sufficient detail to assure adequate planning and execution of the Work such that, in the judgment of the CONSTRUCTION MANAGER, it provides an appropriate basis for forecasting, monitoring, and evaluation of the progress of the Work. Work activities shall conform to the following requirements:

1. Describe Work activities using consistent terminology such that the Work is readily identifiable for assessment of completion.

2. Subdivide the Work into activities of duration no longer than fifteen (15) working days each, except as to non-construction activities (such as procurement of materials, delivery of materials, delivery of equipment, and

concrete curing) and any other activities for which the CONSTRUCTION MANAGER may approve a longer duration.

3. The construction time as determined by the schedule from early start to late finish for any sub-phase, phase or the entire project shall not exceed the Contract times specified or shown in the Contract Documents. One day shall be the smallest time unit shown unless otherwise directed by the CONSTRUCTION MANAGER.

4. Activities labeled "start," "continue," or "completion" will not be allowed. Lead and lag time activities will be acceptable only if the description accurately identifies such a restraint and that are realistic with respect to the scheduling and sequencing of the Work and overall control schedule of the project.

5. Show the following information for each Work activity:

   a. WBS number consistent with the template provided by the CONSTRUCTION MANAGER at a later date. The CONTRACTOR's CPM will be uploaded into a master program schedule developed and maintained by the Program Manager. The WBS is the basis for the master schedule and shall be the framework for the CONTRACTOR's Schedule of Values in the cost loaded schedule.

   b. Performance responsibility, Subcontractor, trade code, (GEN, MECH, ELEC, CARP, PLAST, Etc.) and separate General CONTRACTOR identification.

   c. Duration in calendar days (and number of shifts per calendar day as appropriate).

   d. Work location code, descriptive of the physical pipeline station and by facility name.

   e. Cost data as described herein.

   f. Coding and organization of data and schedule information in accordance with the WBS requirements.

G. The construction schedule shall contain the following milestones:

1. Notice to Proceed.

2. Mobilization.

3. Construction Start.

4. Substantial Completion.

5. Specified milestones.

6. Final Completion.

H. The schedule shall indicate the sequence and interdependency of Work activities. It shall include, but not be limited to, the following items as appropriate to this Contract:

1. Working drawing preparation by the CONTRACTOR and review by the CONSTRUCTION MANAGER.

2. Material and Equipment (early start / finish dates, and late start / finish dates):

a. Vendor submittal /acceptance.

b. Shop drawing submittal /acceptance.

c. Release for fabrication.

d. Fabrication period.

e. Witness shop test (if applicable).

f. Delivery.

g. Installation.

h. Check out.

i. O&M manuals submittal /acceptance.

j. Lesson plans submittal /acceptance.

k. Training.

3. Shop and field performance tests and supervisory service activities.

4. Mobilization and move in.

5. Preparing coordination and layout drawings.

6. Environmental constraints as indicated in the Contract Documents.

7. Obtaining all required permits.

8. Specific Work activities including, but not limited to: sitework, excavation, underground pipe installation, structural excavation, soil testing, backfill, placement of sheeting, pile driving, formwork erection, rebar placement,

placing of concrete, stripping forms, concrete curing, installation of fiber optic conduits, terminations, other materials and equipment, and cleanup..

9. Construction of all facilities outlined in the Contract Documents.

10. Subcontractor's items of Work.

11. Time allowance for inclement weather per National Oceanic and Atmospheric Administration (NOAA) information.

12. Punchlists.

13. Final cleanup.

14. Time allowance for testing.

15. Contract activity interface coordination with other CONTRACTORS, substantial completion and final completion dates, and maintaining operations of existing plant(s).

16. Indicate all coordination activities from related Construction Contracts.

17. Connection to all existing plant systems and equipment.

18. Preparation of final copies of CONTRACTOR working drawings.

19. Specific information required by the CONSTRUCTION MANAGER.

20. All temporary utilities and construction.

21. Required inspections by the CONSTRUCTION MANAGER.

22. Monthly updating of Contract Record Drawings and final submittal of Record Drawings at project completion, or as directed by the CONSTRUCTION MANAGER.

I. The schedule database must be organized and coded in accordance with the work breakdown structure (WBS) template which will be supplied to the CONTRACTOR by the CONSTRUCTION MANAGER at a later date. The CONTRACTOR's CPM will be uploaded into a master program schedule developed and maintained by the Program Manager. The WBS is the basis for the master schedule and shall be the framework for the CONTRACTOR's Schedule of Values in the cost loaded schedule.

J. Develop other activity codes and values needed to comply with the reporting requirements listed herewith, subject to acceptance by the CONSTRUCTION MANAGER.

PART 6 -- TIME EXTENSION FOR SEVERE WEATHER

A. Upon written request from the CONTRACTOR, the CONSTRUCTION MANAGER may suspend the counting of contract time, herein called time extension, for the CONTRACTOR's convenience during unusually severe weather. The CONTRACTOR's request for time extension due to severe weather delays shall clearly demonstrate that the weather conditions are "unusually severe," would not have been reasonably anticipated given the normal prevalent weather conditions in the locality of the work, that such conditions adversely affected 50 percent or more of the CONTRACTOR's workday and delayed work critical to the timely completion of the project.

B. “Unusually severe” weather conditions are defined as:

1. Sustained air temperature at the job site for more than 4 hours during the Working Hours that is at least 10 degrees Fahrenheit below the temperatures listed below:

Temperature (degrees Fahrenheit)			
DEC	JAN	FEB	MAR
17	15	19	25

Rainfall at the job site greater than 0.5 inches per hour.

2. Snowfall at the job site greater than 10 inches in a single occurrence.

3. Sustained winds for 2 hours or longer at the job site of greater than 35 miles per hour.

C. The CONTRACTOR is reminded that the contract time already includes an allowance for calendar days lost to adverse weather for each month. The anticipated number of days lost is based on the current standard used by the Urban Drainage and Flood Control District, and is listed as follows:

JAN	FEB	MAR	APR	MAY	JUN	JUL	AUG	SEP	OCT	NOV	DEC
7	4	4	4	6	3	4	2	3	3	4	5

D. Only the number of days lost due to unusually severe weather as requested by the CONTRACTOR and approved by the CONSTRUCTION MANAGER, that exceeds the above-anticipated number of days lost for the month, shall be considered for granting a contract time extension.

E. If, at any time during the contract time period, the CONTRACTOR fails to prosecute the work continuously and diligently as reasonably expected, and with sufficient forces and equipment to maintain satisfactory work progress, the CONTRACTOR shall forfeit the right to time extension for unusually severe weather conditions. In this case, the CONTRACTOR shall make up for the time lost through acceleration of the remaining work and without any additional costs to the UTILITIES.

F. The time extension will be implemented by change order. All costs resulting from the time extension including, but not limited to, the protection and maintenance of the job site, maintaining specified insurance and bonding certificates, and traffic control for the period of time extension, shall be the responsibility of the CONTRACTOR and at no additional cost to UTILITIES. Unit price adjustments or special allowances shall not he paid by UTILITIES for escalated material, labor, equipment, or any other costs associated with the time extension.

PART 7 -- PRELIMINARY PROGRESS SCHEDULE

A. The Preliminary Progress Schedule (which is due no later than 10 business days after Notice to Proceed or 5 days prior to the Preconstruction Meeting, whichever occurs sooner) shall contain 10 copies of the following information:

1. All procurement activities such as: prepare submittals/shop drawings, CONSTRUCTION MANAGER's review and comment, fabrication and delivery, and shop testing.

2. The project's critical path.

3. Cash flow report for the total project.

4. All procurement activities, including testing.

5. Scheduled activities for the period of Notice to Proceed up to 90 days thereafter.

PART 8 -- PROGRESS SCHEDULE

A. The Progress Schedule (which is due no later than 30 days after Notice to Proceed) shall demonstrate the final level of detail for each activity and shall contain the required relationships completely identified and the durations of each activity correctly depicted. The Progress Schedule shall be composed of <u>two parts</u>:

1. A complete logic and duration schedule at the final level of detail for each activity, containing the required relationships completely identified and the durations of each activity correctly depicted.

2. The Progress Schedule shall contain no Contract changes or delays which may have been incurred during the interim schedule development period. These

changes will be entered at the first update after the Progress Schedule has been accepted.

3. The Progress Schedule will contain all cost information assigned each of the specific activities at the final level of detail. Each activity shall be cost and resource loaded over time including all craft leadership and support staff to permit initial and monthly generation of a cash flow curve and resource curve and to assess the progress of the Work.

4. If the Progress Schedule is not accepted, the CONTRACTOR shall revise the schedule in accordance with the CONSTRUCTION MANAGER's comments and resubmit within 7 calendar days.

5. Once the Progress Schedule is accepted it becomes the schedule of record and the basis for future schedule updates.

6. After the acceptance of the Progress Schedule, no changes shall be made therein without approval of the CONSTRUCTION MANAGER.

7. The CONTRACTOR shall not be entitled to any damages by reason of the failure of the CONSTRUCTION MANAGER to give timely acceptance or comments on any progress schedule hereunder.

B. CONTRACTOR's first (1st) payment request will be processed if the Progress Schedule has been submitted by the CONTRACTOR and returned by the CONSTRUCTION MANAGER with corrections noted with the understanding that the corrections will be made.

C. CONTRACTOR's second (2nd) payment request will be processed for payment only if the Progress Schedule has been submitted by the CONTRACTOR and returned by the CONSTRUCTION MANAGER with corrections noted with the understanding that the corrections will be made and that the final corrected version is received within 60 days from Notice to Proceed.

D. As a condition precedent to payment of the CONTRACTOR's third (3rd) payment request thereafter for costs earned under the Contract, the Progress Schedule must be acceptable to the CONSTRUCTION MANAGER.

PART 9 -- PROGRESS OF THE WORK

A. If at any time during the project, the CONTRACTOR fails to complete any activity by its latest completion date, he will be required, within 7 days, to submit to the CONSTRUCTION MANAGER a written statement as to how and when he plans to reorganize his work force and re-schedule the Work and recovery and potential schedule delay during the next schedule update period.

B. Monthly Schedule Updates:

1. Once the Baseline Progress Schedule is accepted by the CONSTRUCTION MANAGER, the CONTRACTOR shall be responsible for preparing and submitting monthly update information on logic, physical percent complete, actual start and finish dates, and duration changes and related reports, diagrams and schedules.

2. All subsequent monthly updates shall be compared to the Baseline Progress Schedule. In addition, each current monthly update shall be compared to the last month's update. Each update shall be labeled by period with data date and report date identified on the hard copy and electronic file label.

3. The monthly update of the Baseline Progress Schedule shall include the following:

   a. Two (2) electronic copies of the schedule, data date and monthly period clearly marked.

   b. Two (2) copies of the CPM computer printout and arrow diagram which shall:

      1) Compare baseline schedule activities against current update activities.

      2) Clearly identify critical path and near critical paths.

   c. Two (2) electronic and two (2) hard copies of the narrative report.

   d. Two (2) electronic and two (2) hard copies of the cash flow projections by month with early and late forecast schedule dates and actual partial payment amounts by CONTRACTOR and total project.

   e. Two (2) electronic and two (2) hard copies of successor / predecessor, total float and 90 day look ahead reports.

   f. Two (2) electronic and two (2) hard copies of the detailed monthly cost activity report, reflecting the actual costs for the period, costs to date, and budgeted costs.

   g. Two (2) electronic and two (2) hard copies of the monthly summary cost activity report, oriented to the monthly payment requisition level of detail.

   h. Two (2) electronic and two (2) hard copies of the updated resource report.

4. Updates shall be provided monthly with the request for progress payment. The CONSTRUCTION MANAGER shall have the right to withhold payment until the monthly update(s) have been received. Updates to the schedule shall begin immediately following acceptance of the Preliminary Schedule. Updates will continue during the development of the baseline schedule. Once the baseline schedule is found to be acceptable, it shall become the basis for succeeding schedule updates.

5. Default progress data provided from the scheduling system shall not be allowed. Actual start and finish dates shall not be automatically updated by default mechanisms that may be included in CPM scheduling software systems. Actual start and finish dates on the CPM schedule shall match those dates provided from the CONTRACTOR Daily Control Reports represent that the actual dates are accurate. Failure of the CONTRACTOR to document the actual start and finish dates on the CONTRACTOR Daily Control Report for every in-progress or completed activity and to ensure that the data contained on the CONTRACTOR Daily Control Reports is the sole basis for schedule updating shall result in the disapproval of the CONTRACTOR's schedule and the inability of the CONSTRUCTION MANAGER to evaluate the CONTRACTOR progress for payment purposes.

6. Activities that have reported progress without predecessor activities being completed (Out-of-Sequence Progress) will not be allowed except on a case-by-case basis with the approval from the CONSTRUCTION MANAGER. A written explanation of each activity shall be included in the monthly submittal. The CONSTRUCTION MANAGER may direct that changes in schedule logic be made to correct any or all out-of-sequence Work.

7. The CONTRACTOR shall identify each month any changes to the schedule, such as: new activities, deleted activities, activity duration changes, activity description changes, and change in logic relationships between activities. Logic changes shall be described, with an explanation of the rational for the change provided in the report.

8. The CONTRACTOR shall not constrain the schedule with artificial logic ties and or constraint dates and or any other scheduling techniques that may distort the activity float and total float associated with the critical path activities and the schedule in general.

9. The CONTRACTOR shall provide a schedule defining the submittal dates for equipment, materials, means and methods which require submittals. This submittal schedule shall be tied to early start / early finish and late start / late finish dates to ensure that time has been allowed for review and return.

10. The CONTRACTOR shall submit monthly the proposed correlated sequence and estimated dates for submission, approval and final submission activities for the following:

    a. Working Drawings Submittals.

    b. Equipment operation and maintenance manuals submittals.

    c. Delivery of materials and equipment to site.

    d. Final field tests.

    e. Special tools and lubricant deliveries.

    f. Spare part deliveries.

    g. Instructional services.

    h. Permits.

    i. Final Record Documents.

    j. Testing.

    k. Piping and Equipment Identification.

    l. The above information shall be presented, in an organized tabular format, showing each submittal item:

        1) Submission date (actual or forecast).

        2) Approval date (actual or forecast).

        3) Final submissions (actual or forecast).

        4) Comments (actual or forecast).

    m. The above equipment/material information shall be presented in an organized tabular matrix format, showing for each item:

        1) Drawing submittal date (actual or forecast).

        2) Drawing approval date (actual or forecast).

        3) Release for fabrication date (actual or forecast).

        4) Delivery date (actual or forecast).

PART 10 -- COST AND NARRATIVE PROGRESS REPORTS

A. Prepare and submit detailed and summary cost activity reports each month. The cost information shall be updated by activity and summarized for each month. The sum of all monthly costs shall be equal to the contract amount plus approved change orders. The updated cost information shall be consistent with the payment amounts requested via the payment requisition.

B. The costs shall be summarized for each month and the sum of all the monthly costs shall be equal to the Contract Price.

C. The Narrative Report shall include and be in the following format:

1. The CONTRACTOR's transmittal letter.

2. Schedule report indicating each activity on the CPM Schedule that it has been:

   a. Completed during this reporting period.

   b. In progress this reporting period.

   c. Scheduled next reporting period.

3. Analysis, by critical path, of each negative path describing:

   a. The nature of the critical path.

   b. Impact on other activities, milestones and completion dates.

   c. Recommendations for recovery of the delays.

4. Current and anticipated delays.

   a. Cause of the delay.

   b. Corrective action and schedule adjustments to correct the delay.

   c. Impact of the delay on other activities, milestones and completion dates.

5. Change in construction sequence, logic changers, relationship changes or duration changes and the rationale associated with each change that required the change to be made.

6. Pending issues and status of other items:

   a. Permits.

   b. Contract modifications.

c. Time extension requests.

d. Long lead procurement items.

7. Tabular schedule reports tabulated by:

a. CONTRACTOR/early start.

b. Total float/early start.

c. Area/early start.

d. Activity number.

8. Added/deleted activities.

9. Out of Sequence Report describing the necessity of each activity relationship shown therein.

10. Illogical Progress/Restraint Reports (if any).

11. Contract complete date status.

12. Ahead of schedule and number of days.

13. Behind schedule and number of days.

14. Summary of project cost data by appropriate breakdown including budget quantity, cost, percent complete, actions to date, actions this period, estimate to complete and variance.

15. Summary of project status including cumulative information to date, variance and forecast at completion.

16. Other project or scheduling concerns.

17. Review and update of CPM Schedule.

18. Safety Reports and any code violations or warnings.

19. Computer disk containing the latest CPM schedule update file.

PART 11 -- SCHEDULE END FLOAT

A. Total Float is the number of days by which a part of the Work in the construction schedule may be delayed from its early start and finish dates without necessarily extending the contract completion date. The difference in time between the project's scheduled early completion date, as submitted, and the required contract completion date shall be considered as float. Float within the overall schedule, and total float

within the overall schedule, is not for the exclusive use of either the UTILITIES or the CONTRACTOR, but is jointly owned by both parties and is a resource available to be shared by both as needed to meet Contract milestones and the contract completion dates.

B. The CONTRACTOR shall not sequester shared float though such strategies as extending activity duration estimates to consume available float, using preferential logic, using extensive crew/resource sequencing, etc. Since float time within the schedule is jointly owned, no time extensions will be granted or delay damages paid until the critical path of the CPM schedule is affected with extends the Work beyond a milestone or contract completion date.

C. Early completion schedules are generally not acceptable to the UTILITIES but may be accepted as convenience to the CONTRACTOR under the following conditions.

1. The CONTRACTOR must submit a written request outlining the specific reasons for using the early completion schedule.

2. The CONTRACTOR acknowledges and agrees in writing that the proposed reduction in time represents Project time already paid for by the UTILITIES as part of the Bid Price, and is available to both the CONTRACTOR and the UTILITIES for mitigation of impacts to the Project from any source. The CONTRACTOR shall not be entitled to any increase in Contract Price for failure to achieve the early completion and the CONTRACTOR waives all claims to same.

3. Early completion schedule shall not be based on expedited approvals, inspection, or the relaxing of construction constraints by the UTILITIES, CONSTRUCTION MANAGER or the ENGINEER.

4. Early completion schedules must meet all other Contract requirements.

5. The CONTRACTOR acknowledges and agrees in writing that the UTILITIES has the right to withhold the final payment due the CONTRACTOR until the contractual end date.

6. Early completion schedule updates which contain activities behind schedule shall be revised when requested by the CONSTRUCTION MANAGER.

PART 12 -- THREE (3) WEEK LOOK AHEAD

A. The CONTRACTOR shall provide a three (3) week look ahead schedule which shall include the week in which the schedule is presented, plus the two (2) successive weeks thereafter. The three week (3) look ahead shall be submitted to the CONSTRUCTION MANAGER no later than 48 hours prior to the weekly project progress meeting.

PART 13 -- MONTHLY PROGRESS MEETING AND REPORTS

A. Once each month on a date established by the CONSTRUCTION MANAGER, a progress meeting will be held at which time the schedule will be reviewed. The meeting shall be attended by the CONSTRUCTION MANAGER, design engineering consultants, CONTRACTOR, and Subcontractor representatives for this Contract.

B. The CONTRACTOR's representative(s) at the meetings shall have the competence and authority to make any necessary decisions and their statement shall commit the CONTRACTOR to the agreed procedures, sequence of Work activities, operations and time schedules.

C. The updated Schedule shall be furnished to the CONSTRUCTION MANAGER electronically at least 48 hours prior to the meeting and be available in hard copy at the meeting for review. To update the CPM Schedule, the CONTRACTOR shall:

1. Obtain from each Subcontractor the necessary information to update the schedule to reflect progress to date and to update the schedule for the balance of the project.

2. Enter actual start and completion dates for those activities started and/or completed during the previous reporting period.

3. For activities in progress, indicate the remaining duration correlating to an accurate forecasted completion date and physical percentage complete to date. Review and revise as necessary the network logic for the remaining duration of the Work from the update to the estimated completion date.

4. For activities not yet started, review and revise as required the necessary logic for the durations and the estimated start and completion dates.

5. Enter for each applicable activity, actual installed quantities information and corresponding cost information.

6. Add identified contract modification activities.

7. Annotate updated status information on the CPM Schedule in a manner that graphically depicts the current status of the Work.

8. Should discrepancies regarding data/information accuracy be noted during the review meeting or other discussions, the CONSTRUCTION MANAGER may direct the CONTRACTOR to adjust the percentage complete, and remaining duration, and actual dates to selected activities and re-issue the updated schedule and cost reports.

D. Failure to submit the schedule, subsequent updates, or previously requested corrections of the schedule within seven (7) calendar days of the update meeting, shall be considered cause for withholding any partial payments due or that may become due under the Contract.

E. The CONTRACTOR shall work closely with the CONSTRUCTION MANAGER to produce the final reports subject to approval by the CONSTRUCTION MANAGER. These reports shall be generated from the CONTRACTOR's scheduling database and other software tools to comply with the report examples provided herein. In addition, the CONTRACTOR shall work closely with the CONSTRUCTION MANAGER to produce the final reports subject to approval by the CONSTRUCTION MANAGER.

PART 14 -- REMEDIAL MEASURES AND RECOVERY SCHEDULE

A. Delays to Critical Path: Whenever it becomes apparent from the current monthly update that delays to the critical path have resulted and these delays are through no fault of UTILITIES or ENGINEER and hence, that the Contract completion date will not be met, or when so directed by the CONSTRUCTION MANAGER, the CONTRACTOR shall take some or all of the following actions at no additional cost to UTILITIES:

1. Increase resources in such quantities and crafts as will substantially eliminate the backlog of Work.

2. Increase working hours per shift, shifts per day, or working days per week, the amount of construction equipment, or any combination of the foregoing to substantially eliminate the backlog of Work.

3. Reschedule activities to achieve maximum practical concurrence of accomplishment of activities, and comply with the revised schedule.

B. The CONTRACTOR shall submit to the CONSTRUCTION MANAGER for review a written statement of the steps he intends to take to remove or arrest the delay to the schedule. The CONTRACTOR shall promptly provide such level of effort to bring the Work back on schedule. Should schedule delays persist, the CONTRACTOR's surety may be asked to attend schedule update meetings.

C. Under no circumstances will the addition of equipment, construction forces, increasing the working hours, any other method, manner, or procedure to return to the CPM Schedule be considered justification for contract modification or extra Work.

D. Failure of the CONTRACTOR to recover the Schedule time frames as set forth in this agreement will be considered to be a material breach of the Contract. Thereupon UTILITIES shall have the right to remove any or all of the remaining Work from the CONTRACTOR's scope and to complete such Work, by whatever method UTILITIES may deem expedient, including employing another CONTRACTOR or CONTRACTOR's under such form of contract as UTILITIES may deem advisable, or the UTILITIES may itself provide all labor or materials and perform any part of such Work at its option. The CONTRACTOR agrees that UTILITIES shall have the right to take possession of and to use any or all of the materials, plant, tools, goods, supplies and property of any and every kind furnished by the CONTRACTOR for such Work. The expense of so completing such Work, together with a reasonable charge for administering any contract for such completion, shall be charged to the CONTRACTOR, and such expense shall be deducted by UTILITIES out of such monies as may be due or may at any time thereafter become due to the CONTRACTOR. In case such expense exceeds the sum which would have otherwise been payable under the Contract, then the CONTRACTOR and it sureties shall be liable for and shall upon notice from UTILITIES, promptly pay to UTILITIES the amount of the increase in cost of doing the Work.

E. The CONSTRUCTION MANAGER may require the CONTRACTOR, at any time during the project, to develop a more detailed schedule/fragnet than depicted in the detailed schedule, to provide a clearer understanding of the effort needed to complete a specific area or task.

PART 15 -- PAYMENT DEDUCTIONS

A. A permanent line-item deduction, at the pro-rata rate of two thousand dollars ($2,000) per month shall be deducted from the Contract Price if, in the judgment of the CONSTRUCTION MANAGER, CONTRACTOR is deemed to be the cause for the delay in submitting any of the three aforementioned submittals or subsequent monthly updates per monthly progress meetings and Reports. The CONTRACTOR shall be notified within one week of said delinquency that the permanent deduction is being assessed against the Contract.

PART 16 -- FLOAT OWNERSHIP

A. Without obligation to extend the overall completion date or any intermediate completion dates set out in the CPM schedule, the CONSTRUCTION MANAGER may initiate changes to the Contract Work that absorb float time only. CONTRACTOR-initiated changes that encroach on the float time identified in the CPM Schedule may be accomplished with the CONSTRUCTION MANAGER's approval.

B. UTILITIES-initiated changes that extend or shorten the Contract Times shall be the sole basis to adjust the Contract completion date. Delays in the critical path not associated with proper requests for time extensions in accordance with the General Conditions shall be deemed to be the responsibility of the CONTRACTOR.

PART 17 -- PRODUCTS (NOT USED)

PART 18 -- EXECUTION

END OF SECTION

SECTION 01 32 34
PHOTOGRAPHIC AND VIDEO DOCUMENTATION

PART 1 GENERAL

1.01 GENERAL

A. If in the opinion of the CONSTRUCTION MANAGER or the property owner, the pre-construction record(s) do not accurately reflect the pre-existing condition, further records shall be obtained at the CONTRACTOR's expense.

1.02 SUBMITTALS

A. Informational:

1. Statement of Qualification (SOQ) for professional photographer.
2. SOQ for professional videographer.

B. Digital Images: Submit six compact discs within 5 days of being taken.

C. Video Recordings: Submit five copies, including updated project video log, within 5 days of being taken..

D. Complete pre-existing condition assessment documentation as specified in Section 01 14 19, Use of Site.

PART 2 PRODUCTS (NOT USED)

PART 3 EXECUTION

3.01 CONSTRUCTION PHOTOGRAPHS

A. Photographically document the phases of the project including preconstruction, construction progress, and post-construction.

B. Photography:

1. Photographer: Professional commercial photographer, experienced in shooting interior/exterior construction photos, in daylight and nighttime conditions, and in good and inclement weather.
2. Camera: Digital SLR, minimum sensor size 36.0 mm by 23.9 mm.
3. Format: JPEG, minimum resolution 4,256 by 2,832 pixels.

C. Consult with CONSTRUCTION MANAGER on the subject matter and vantage point from which photographs are to be taken.

D. Preconstruction and Post-Construction:

1. After Effective Date of the Agreement and before Work at Site is started, and again upon issuance of Substantial Completion, take a minimum of 2,000 photographs of the Construction Site and property adjacent to the perimeter of Construction Site to fully represent and document pre-construction and post-construction conditions. Take additional photos as required in accordance with Section 01 14 13, Access to Site.
2. Direct the emphasis of photographs to structures both inside and outside the Site.
3. Photographs of Preconstruction Vegetation Cover: Take a minimum of two photos every 50 feet along the pipeline alignment to photographically document preconstruction vegetation cover. Note pipeline station and direction of photo.

E. Construction Progress Photos:

1. Photographically demonstrate progress of construction, showing Site and adjacent properties as well as interior and exterior of new or impacted structures.
2. Weekly: Minimum of 50 photographs.
3. Digital Images:
   a. Archive using a commercially available photo management system as approved by CONSTRUCTION MANAGER and UTILITIES.
   b. CD or DVD Label:
      1) COLORADO SPRINGS UTILITIES.
      2) Photos.
      3) CD or DVD number (numbered sequentially, beginning with WP-S1-001).
      4) Project name – SDS WORK PACKAGE S1, RAW WATER PIPELINE.
      5) Name of street(s) or easement(s) included.
      6) Applicable location by engineering stationing.
      7) Date and time of coverage.

3.02 AUDIO-VIDEO RECORDINGS

A. Prior to beginning Work on Construction Site or of a particular area of the Work, and again within 10 days following date of Substantial Completion, videograph Construction Site and property adjacent to Construction Site.

B. In the case of preconstruction recording, do not begin Work in the area prior to CONSTRUCTION MANAGER's review and approval of content and quality of video for that area.

C. Direct the emphasis of the video to physical condition of existing vegetation, structures, and pavements within pipeline alignment, along authorized haul routes and access roads, and areas adjacent to and within the right-of-way or easement, and storage and staging areas.

D. Consult with CONSTRUCTION MANAGER on subject matter and vantage point from which video recordings are taken.

E. If training sessions are required by Section 01 43 33, Manufacturers' Field Services, or by detailed specification, video graph session.

F. Video recording will be by a professional commercial videographer, experienced in shooting exterior and interior construction videos, in both good and inclement weather.

G. Video Format and Quality:

1. MPEG-2 or MPEG-4 format or approved equal, with sound.
2. Video:
   a. 1080 line High Definition Video (HDV).
   b. Electronically display the month, day, year, and time of the recording.
3. Audio:
   a. Audio documentation shall be clear, precise, and at a moderate pace.
   b. Indicate date, project name, and a brief description of the location of taping, including:
      1) Facility name.
      2) Street names or easements.
      3) Addresses of private property.
      4) Direction of coverage, including engineering stationing, if applicable.
4. Documentation:
   a. DVD Label:
      1) COLORADO SPRINGS UTILITIES.
      2) Video.
      3) DVD number (numbered sequentially, beginning with WP-S1-001).
      4) Project name – SDS WORK PACKAGE S1, RAW WATER PIPELINE
      5) Name of street(s) or easement(s) included.
      6) Applicable location by engineering stationing.
      7) Date and time of coverage.

H. Project Video Log: Maintain an ongoing log that incorporates above noted label information for DVDs on Project.

END OF SECTION

SECTION 01 33 00
SUBMITTAL PROCEDURES

PART 1 GENERAL

1.01 SUMMARY

A. This Section includes administrative and procedural requirements for submitting Shop Drawings, Product Data, Samples, and other submittals.

B. See Section 01 32 16, Construction Progress Schedule, for submitting schedules and reports, including Construction Schedule.

C. See Section 01 32 34, Photographic and Video Documentation, for submitting construction photographs and construction videotapes.

D. See Section 01 77 00, Closeout Procedures, for content and final submittal of Record Drawings, Record Specifications, and Record Product Data.

E. See Section 01 78 23, Operation and Maintenance Data, for submitting operation and maintenance manuals.

1.02 DEFINITIONS

A. Action Submittals: Written and graphic information that requires CONSTRUCTION MANAGER's responsive action.

B. Informational Submittals: Written information that does not require CONSTRUCTION MANAGER's responsive action. Submittals may be rejected for not complying with requirements.

1.03 SUBMITTAL PROCEDURES

A. Contract Manager System: To expedite the transmittal and review of Submittal data, the CONSTRUCTION MANAGER has established a web-based "Contract Manager" System as the contract administration and document control software on the Project. Use this system to transmit documents and track the submittals, RFIs and overall Project communication. Use the "Contract Manager" System for submittal data that can be easily transmitted electronically.

B. Forms: The preferred forms for submittals are as developed by the CONSTRUCTION MANAGER or resident in the "Contract Manager". Obtain consent of the CONSTRUCTION MANAGER prior to using other forms. The following list of forms may be used but the list is not necessarily inclusive:

1. CM - 307 Memorandum of Delay.
2. CM - 432 System Outage Request.
3. CM - 503 Request for Shutdown.
4. CM - 1004 Request for Adjustment of Retainage.
5. CM - 1005 Consent of Surety for Reduction of Partial Release of Retainage.
6. CM - 1006 Consent of Surety for Final Payment.
7. CM - 1007 Affidavit of Payment.
8. CM - 1202 CONTRACTOR's Certification of Completion.
9. CM - 1301 Partial Waiver of Lien.
10. CM - 1302 Final Waiver of Lien.
11. CM - 1303 Affidavit of Release of Lien.

C. Coordination: Coordinate preparation and processing of submittals with performance of construction activities.

1. Coordinate each submittal with fabrication, purchasing, testing, delivery, other submittals, and related activities that require sequential activity.
2. Coordinate transmittal of different types of submittals for related parts of the Work so processing will not be delayed because of need to review submittals concurrently for coordination.
   a. CONSTRUCTION MANAGER reserves the right to withhold action on a submittal requiring coordination with other submittals until related submittals are received.

D. Submittals Schedule: Comply with requirements in Section 01 32 16, Construction Progress Schedule, for list of submittals and time requirements for scheduled performance of construction activities.

E. Within 7 days after the date of commencement as stated in the Notice to Proceed, submit the following items for review:

1. A preliminary schedule of Shop Drawings, Samples, and proposed Substitutes ("Or-Equal") submittals as required in the Contract Documents.

F. Processing Time: Allow enough time for submittal review, including time for resubmittals, as follows. Time for review commences on CONSTRUCTION MANAGER's receipt of submittal. No extension of the Contract Time will be authorized because of failure to transmit submittals enough in advance of the Work to permit processing, including resubmittals.

1. Initial Review: Allow 15 working days for initial review of each submittal. Allow additional time if coordination with subsequent submittals is required. CONSTRUCTION MANAGER will advise when a submittal being processed must be delayed for coordination. It is considered reasonable that a complete and acceptable submittal is made to the CONSTRUCTION MANAGER by the first resubmittal on an item. UTILITIES reserves the right to withhold monies to cover additional costs of the CONSTRUCTION MANAGER's review beyond the first resubmittal. The CONSTRUCTION MANAGER's maximum review period for each submittal or resubmittal will be 15 working days.
2. Intermediate Review: If intermediate submittal is necessary, process it in same manner as initial submittal.
3. Resubmittal Review: Allow 15 working days for review of each resubmittal.

G. Identification: Place a permanent label or title block on each submittal for identification.

1. Indicate name of firm or entity that prepared each submittal on label or title block.
2. Provide a space approximately 6 by 8 inches on label or beside title block to record review and approval markings and action taken by CONSTRUCTION MANAGER and/or ENGINEER.
3. Include the following information on label for processing and recording action taken:
   a. Project name.
   b. Date.
   c. Name and address of CONSTRUCTION MANAGER and ENGINEER.
   d. Name and address of CONTRACTOR.
   e. Name and address of subcontractor.
   f. Name and address of supplier.
   g. Name of manufacturer.
   h. Submittal number or other unique identifier, including revision identifier.
      1) Use the Specification Section number followed by a decimal point and then a sequential number (e.g., 061000.01) for the submittal number. Resubmittals include an alphabetic suffix after another decimal point (e.g., 061000.01.A).
   i. Number and title of appropriate Specification Section.

j. Drawing number and detail references, as appropriate.
k. Location(s) where product is to be installed, as appropriate.
l. Other necessary identification.

H. Deviations: Highlight, encircle, or otherwise specifically identify deviations from the Contract Documents on submittals.

I. Additional Copies: Unless additional copies are required for final submittal, and unless CONSTRUCTION MANAGER and/or ENGINEER observes noncompliance with provisions in the Contract Documents, initial submittal may serve as final submittal.

1. Additional copies submitted for maintenance manuals will not be marked with action taken and will be returned.

J. Transmittal: Package each submittal individually and appropriately for transmittal and handling. Include the CONSTRUCTION MANAGER's standard submittal transmittal form, a reproducible copy of which is available from the CONSTRUCTION MANAGER, with each transmitted submittal. Submittals without the form or where applicable items on the form are not completed will be returned for resubmittal. CONSTRUCTION MANAGER will discard submittals received from sources other than CONTRACTOR.

1. Organization:
   a. Use a single submittal transmittal form for each technical specification section or item or class of material or equipment for which a submittal is required. A single submittal covering multiple sections will not be acceptable, unless the primary specification references other sections for components.
   b. On the transmittal form, index the components of the submittal and insert tabs in the submittal to match the components. Relate the submittal components to specification paragraph and subparagraph, Drawing number, detail number, schedule title or room number as applicable.
   c. Unless indicated otherwise, match terminology and equipment names and numbers used in submittals with those used in the Contract Documents.
   d. Disorganized submittals will be returned without review.

K. Resubmittals: Make resubmittals in same form and number of copies as initial submittal.

1. Note date and content of previous submittal.
2. Note date and content of revision in label or title block and clearly indicate extent of revision.
3. Resubmit submittals until they are marked "Reviewed with CONSTRUCTION MANAGER and/or ENGINEER's action stamp".

L. Distribution: Furnish copies of final submittals to manufacturers, subcontractors, suppliers, fabricators, installers, authorities having jurisdiction, and others as necessary for performance of construction activities. Show distribution on transmittal forms.

1. Use for Construction: Use only final submittals with mark indicating "Reviewed with CONSTRUCTION MANAGER and/or ENGINEER'S action stamp" taken by CONSTRUCTION MANAGER and/or ENGINEER.

1.04 CONTRACTOR'S USE OF ENGINEER'S CAD FILES

A. General: ENGINEER's CAD files will not be provided for use in connection with Project except as shown on Drawings.

PART 2 PRODUCTS

2.01 PRECONSTRUCTION CONFERENCE SUBMITTALS

A. At the preconstruction conference, submit the following items to the CONSTRUCTION MANAGER for review:

1. A preliminary schedule of Shop Drawings, Samples, and proposed Substitute ("Or-Equal") submittals listed in the Bid.
2. Obtain a list of permits and licenses, indicating the agency required to grant the permit, the expected date of submittal for the permit, required date for receipt of the permit, and required date for receipt of transferred permits obtained by UTILITIES.
3. A Preliminary Cost Loaded Baseline Schedule in accordance with Section 01 32 16, Construction Progress Schedule.
4. The preliminary site specific safety plan.

2.02 ACTION SUBMITTALS

A. General: Prepare and submit Action Submittals required by individual Specification Sections.

B. Product Data: Collect information into a single submittal for each element of construction and type of product or equipment.

1. If information must be specially prepared for submittal because standard printed data are not suitable for use, submit as Shop Drawings, not as Product Data.
2. Mark each copy of each submittal to show which products and options are applicable.
3. Include the following information, as applicable:
   a. Manufacturer's written recommendations.
   b. Manufacturer's product specifications.

c. Manufacturer's installation instructions.
d. Manufacturer's catalog cuts.
e. Wiring diagrams showing factory-installed wiring.
f. Printed performance curves.
g. Operational range diagrams.
h. Compliance with specified referenced standards.
i. Testing by recognized testing agency.

4. Number of Copies: Submit five copies of Product Data, unless otherwise indicated. Provide one additional copy for submittals requiring review by a consultant. CONSTRUCTION MANAGER will return two (2) copies. Mark up and retain one returned copy as a Project Record Document.

C. Shop Drawings: Wherever called for in the Contract Documents or where required by the CONSTRUCTION MANAGER, furnish a Shop Drawing submittal. Shop Drawings may include detail design calculations, shop-prepared drawings, fabrication and installation drawings, erection drawings, lists, graphs, catalog sheets, data sheets, and similar items. Include the signature and seal of an engineer registered in the appropriate branch in the State of Colorado, unless otherwise indicated, whenever design calculations are required to be submitted as part of a submittal. Prepare Project-specific information, drawn accurately to scale. Do not base Shop Drawings on reproductions of the Contract Documents or standard printed data.

1. Preparation: Fully illustrate requirements in the Contract Documents. Include the following information, as applicable:
   a. Dimensions.
   b. Identification of products.
   c. Fabrication and installation drawings.
   d. Roughing-in and setting diagrams.
   e. Wiring diagrams showing field-installed wiring, including power, signal, and control wiring.
   f. Shop work manufacturing instructions.
   g. Templates and patterns.
   h. Schedules.
   i. Notation of coordination requirements.
   j. Notation of dimensions established by field measurement.
   k. Relationship to adjoining construction clearly indicated.
   l. Seal and signature of professional engineer if specified.
   m. Wiring Diagrams: Differentiate between manufacturer-installed and field-installed wiring.
2. Transmittal Form: Include the CONSTRUCTION MANAGER’s standard submittal transmittal form, a reproducible copy of which is available from the CONSTRUCTION MANAGER, with Shop Drawing submittals. A submittal without the form or where applicable items on the form are not completed will be returned for resubmittal.

3. Sheet Size: Except for templates, patterns, and similar full-size drawings, submit Shop Drawings on sheets at least 8-1/2 by 11 inches but no larger than 36 by 48 inches.
4. Number of Copies: Submit one original plus six hard copies and one electronic copy ("PDF" format) of each submittal unless indicated otherwise. CONSTRUCTION MANAGER will return a transcribed copy in non-editable electronic format.
5. Number of Copies for Pueblo West Metropolitan District Asbestos-Cement Pipeline Replacement: Submit one original plus seven hard copies and one electronic copy ("PDF" format) of each submittal. CONSTRUCTION MANAGER will return a transcribed copy in non-editable electronic format. A copy will be submitted by CONSTRUCTION MANAGER to Pueblo West Metro District for review.
6. Collate and bind: Number every page in a submittal in sequence. Collate and staple or bound, as appropriate each copy of a submittal. The CONSTRUCTION MANAGER will not collate sheets or copies.

D. Samples: Submit Samples for review of kind, color, pattern, and texture for a check of these characteristics with other elements and for a comparison of these characteristics between submittal and actual component as delivered and installed.

1. Transmit Samples that contain multiple, related components such as accessories together in one submittal package.
2. Identification: Attach label on unexposed side of Samples that includes the following:
   a. Generic description of Sample.
   b. Product name and name of manufacturer.
   c. Sample source.
   d. Number and title of appropriate Specification Section.
3. Disposition: Maintain sets of approved Samples at Project site, available for quality-control comparisons throughout the course of construction activity. Sample sets may be used to determine final acceptance of construction associated with each set.
4. Samples for Initial Selection: Submit manufacturer's color charts consisting of units or sections of units showing the full range of colors, textures, and patterns available.
   a. Number of Samples: Submit four full set(s) of available choices where color, pattern, texture, or similar characteristics are required to be selected from manufacturer's product line. CONSTRUCTION MANAGER will return one submittal with options selected.
5. Samples for Verification: Submit full-size units or Samples of size indicated, prepared from same material to be used for the Work, cured and finished in manner specified, and physically identical with material

or product proposed for use, and that show full range of color and texture variations expected. Samples include, but are not limited to, the following: partial sections of manufactured or fabricated components; small cuts or containers of materials; complete units of repetitively used materials; swatches showing color, texture, and pattern; color range sets; and components used for independent testing and inspection.

a. Number of Samples: Submit four sets of Samples. CONSTRUCTION MANAGER and ENGINEER will retain three Sample sets; one Sample set will be returned.

E. Product Schedule or List: As required in individual Specification Sections, prepare a written summary indicating types of products required for the Work and their intended location.

1. Number of Copies: Submit four (4) copies of product schedule or list, unless otherwise indicated. CONSTRUCTION MANAGER will return one copy.

F. Submittals Schedule: Comply with requirements specified in Section 01 32 16, Construction Progress Schedule.

G. Application for Payment: Comply with requirements specified in Section 01 22 13, Unit Price Measurement and Payment.

H. Subcontract List: Prepare a written summary identifying individuals or firms proposed for each portion of the Work, including those who are to furnish products or equipment fabricated to a special design.

1. Number of Copies: Submit four copies of subcontractor list, unless otherwise indicated. CONSTRUCTION MANAGER will return one copy.

2.03 INFORMATIONAL SUBMITTALS

A. General: Prepare and submit Informational Submittals required by other Specification Sections.

1. Number of Copies: Three copies of each submittal, unless otherwise indicated. CONSTRUCTION MANAGER will not return copies.
2. Certificates and Certifications: Provide a notarized statement that includes signature of entity responsible for preparing certification. Include the signature of an officer or other individual authorized to sign documents on behalf of that entity for certificates and certifications.
3. Test and Inspection Reports: Comply with requirements specified in Section 01 45 16.13, Contractor Quality Control.

B. CONTRACTOR's Construction Schedule: Comply with requirements specified in Section 01 32 16, Construction Progress Schedule.

C. Qualification Data: Prepare written information that demonstrates capabilities and experience of firm or person. Include lists of completed projects with project names and addresses, names and addresses of engineers, architects, and owners, and other information specified.

D. Welding Certificates: Prepare written certification that welding procedures and personnel comply with requirements in the Contract Documents. Submit record of Welding Procedure Specification (WPS) and Procedure Qualification Record (PQR) on AWS forms. Include names of firms and personnel certified.

E. Installer Certificates: Prepare written statements on manufacturer's letterhead certifying that Installer complies with requirements in the Contract Documents and, where required, is authorized by manufacturer for this specific Project.

F. Manufacturer Certificates: Prepare written statements on manufacturer's letterhead certifying that manufacturer complies with requirements in the Contract Documents. Include evidence of manufacturing experience where required.

G. Product Certificates: Prepare written statements on manufacturer's letterhead certifying that product complies with requirements in the Contract Documents.

H. Material Certificates: Prepare written statements on manufacturer's letterhead certifying that material complies with requirements in the Contract Documents.

I. Material Test Reports: Prepare reports written by a qualified testing agency, on testing agency's standard form, indicating and interpreting test results of material for compliance with requirements in the Contract Documents.

J. Product Test Reports: Prepare written reports indicating current product produced by manufacturer complies with requirements in the Contract Documents. Base reports on evaluation of tests performed by manufacturer and witnessed by a qualified testing agency, or on comprehensive tests performed by a qualified testing agency.

K. Research/Evaluation Reports: Prepare written evidence, from a model code organization acceptable to authorities having jurisdiction, that product complies with building code in effect for Project.

L. Preconstruction Test Reports: Prepare reports written by a qualified testing agency, on testing agency's standard form, indicating and interpreting results of tests performed before installation of product, for compliance with performance requirements in the Contract Documents.

M. Compatibility Test Reports: Prepare reports written by a qualified testing agency, on testing agency's standard form, indicating and interpreting results of compatibility tests performed before installation of product. Include written recommendations for primers and substrate preparation needed for adhesion.

N. Field Test Reports: Prepare reports written by a qualified testing agency, on testing agency's standard form, indicating and interpreting results of field tests performed either during installation of product or after product is installed in its final location, for compliance with requirements in the Contract Documents.

O. Maintenance Data: Prepare written and graphic instructions and procedures for operation and normal maintenance of products and equipment. Comply with requirements specified in Section 01 77 00, Closeout Procedures.

P. Design Data: Prepare written and graphic information, including, but not limited to, performance and design criteria, list of applicable codes and regulations, and calculations. Include list of assumptions and other performance and design criteria and a summary of loads. Include load diagrams if applicable. Provide name and version of software, used for calculations. Include page numbers.

Q. Manufacturer's Instructions: Prepare written or published information that documents manufacturer's recommendations, guidelines, and procedures for installing or operating a product or equipment. Include name of product and name, address, and telephone number of manufacturer.

R. Manufacturer's Field Reports: Prepare written information documenting factory-authorized service representative's tests and inspections. Include the following, as applicable:

1. Statement on condition of substrates and their acceptability for installation of product.
2. Summary of installation procedures being followed, whether they comply with requirements and, if not, what corrective action was taken.
3. Results of operational and other tests and a statement of whether observed performance complies with requirements.

S. Insurance Certificates and Bonds: Prepare written information indicating current status of insurance or bonding coverage. Include name of entity covered by insurance or bond, limits of coverage, amounts of deductibles, and term of the coverage.

T. Construction Photographs and Videotapes: Comply with requirements specified in Section 01 32 34, Photographic and Video Documentation.

PART 3 EXECUTION

3.01 RECORD DRAWINGS

A. Maintain one full sized set of Drawings at the Site for the preparation of record drawings. On these, mark every project condition, location, configuration, and other change or deviation which may differ from the Contract Drawings at the time of award, including buried or concealed construction and utility features that are revealed during the course of construction. Give special attention to recording the horizontal and vertical location of buried utilities that differ from the locations indicated, or that were not indicated on the Contract Drawings. Supplement record drawings by detailed sketches as necessary or as directed, to fully indicate the Work as actually constructed. These record drawings represent as-built conditions, including revisions made by addenda and change orders, and maintained up-to-date during the progress of the Work. Use red ink for alterations and notes. Notes identify relevant Change Orders by number and date.

B. Paper copies of the record drawings may be required by the CONSTRUCTION MANAGER by the 25th day of every month in conjunction with the monthly pay application as well as at completion of Work. Failure to submit complete requested record drawings may result in payment application being rejected for approval as described in Article 7 of the agreement.

C. Provide CONSTRUCTION MANAGER with access to record drawings during the construction period.

3.02 CONTRACTOR'S REVIEW

A. Review each submittal and check for coordination with other Work of the Contract and for compliance with the Contract Documents. Note corrections and field dimensions. Mark with approval stamp before submitting to CONSTRUCTION MANAGER.

B. Approval Stamp: Stamp each submittal with a uniform, approval stamp. Include Project name and location, submittal number, Specification Section title and number, name of reviewer, date of CONTRACTOR's approval, and statement certifying that submittal has been reviewed, checked, and approved for compliance with the Contract Documents.

3.03 CONSTRUCTION MANAGER'S ACTION

A. General: CONSTRUCTION MANAGER will not receive submittals that do not bear CONTRACTOR's approval stamp and will return them without action.

B. Action Submittals: CONSTRUCTION MANAGER will receive each submittal and forward to appropriate entity to make marks to indicate corrections or modifications required, and return it. CONSTRUCTION MANAGER will stamp each submittal when received. Reviewing entity will stamp each submittal with an action stamp and will mark stamp appropriately to indicate action taken, as follows:

1. NO EXCEPTIONS TAKEN: If a submittal is returned marked "NO EXCEPTIONS TAKEN," formal revision and resubmission will not be required.
2. MAKE CORRECTIONS NOTED: If a submittal is returned marked "MAKE CORRECTIONS NOTED," make the corrections on the submittal, but formal revision and resubmission will not be required.
3. AMEND AND RESUBMIT: If a submittal is returned marked "AMEND AND RESUBMIT," revise it and resubmit the required number of copies. Resubmittal of portions of multi-page or multi-drawing submittals will **not** be allowed. For example, if a Shop Drawing submittal consisting of 10 drawings contains one drawing noted as "AMEND AND RESUBMIT," the submittal as a whole is deemed "AMEND AND RESUBMIT" and all 10 drawings are required to be resubmitted.
4. REJECTED – SEE REMARKS: If a submittal is returned marked "REJECTED – SEE REMARKS," means either that the proposed material or product does not satisfy the specification, the submittal is so incomplete that it cannot be reviewed, or is a substitution request not submitted in accordance with the Contract Documents. Prepare a new submittal that is in conformance with the Contract Documents and submit the required number of copies for review.

C. Fabrication of an item may commence only after the CONSTRUCTION MANAGER has returned the pertinent submittals marked either "NO EXCEPTIONS TAKEN" or "MAKE CORRECTIONS NOTED." Corrections indicated on submittals are considered as changes necessary to meet the requirements of the Contract Documents and not as changes to the contract requirements.

D. Review submittals prior to submission to the CONSTRUCTION MANAGER. Sign and date each submittal as being correct and in strict conformance with the Contract Documents. In the case of Shop Drawings, date and sign each sheet. Note deviations from the Contract Documents on the transmittal sheet. The CONSTRUCTION MANAGER will only receive submittals that have

been so verified. Non-verified submittals will be returned without action taken.

E. Corrections or comments made on the CONTRACTOR's Shop Drawings during review do not relieve the CONTRACTOR from compliance with Contract Drawings and Specifications. Review is for conformance to the program, design concept and general compliance with the Contract Documents only. The CONTRACTOR is responsible for confirming and correlating all dimensions and quantities, fabrication processes and techniques, coordinating the Work of all trades, satisfactory and safe performance of the Work, and the quality, means, and methods of construction.

F. Informational Submittals: CONSTRUCTION MANAGER will review each submittal and will not return it, or will return it if it does not comply with requirements. CONSTRUCTION MANAGER will forward each submittal to appropriate party.

G. Partial submittals are not acceptable, will be considered non-responsive, and will be returned without review.

H. Submittals not required by the Contract Documents may not be reviewed and may be discarded.

END OF SECTION

SECTION 01 33 29
SUSTAINABLE CONSTRUCTION

PART 1 GENERAL

1.01 GENERAL

A. Prepare and submit a Sustainable Construction Plan including recycling and reuse. Identify materials expected to be encountered during demolition, site clearing, field office operations, equipment maintenance, etc. in the plan. In this plan, define how these materials will be handled to maximize recycling and reuse opportunities and to minimize permanent disposal of such items including used motor oil, waste paper, removed asphalt, removed concrete, used tires, etc.

B. To the extent practical, purchase the materials and services from Pueblo County enterprises for work that will be performed in Pueblo County. Provide a monthly report summarizing Pueblo County, El Paso County, and Fremont County purchases.

1.02 SUBMITTALS

A. Informational:

1. Sustainable Construction Plan.
2. Monthly purchasing reports by County.
3. Monthly report on diesel and biodiesel use.

PART 2 PRODUCTS

2.01 BIODIESEL FUEL

A. Use a minimum 10 percent biodiesel fuel in construction equipment.

PART 3 EXECUTION (NOT USED)

END OF SECTION

SECTION 01 34 00
PARTNERING

PART 1 GENERAL

1.01 GENERAL

A. UTILITIES intends to encourage the foundation of a cohesive partnership between UTILITIES, CONTRACTOR, CONSTRUCTION MANAGER, and ENGINEER. This partnership will be structured to draw on the strengths of each organization to identify and achieve reciprocal goals. The partnership participation by CONTRACTOR is required.

B. Project partnering recognizes that UTILITIES, CONTRACTOR, CONSTRUCTION MANAGER, and ENGINEER hold in common the goal of successful completion of this project, including the following specific goals:

1. Construction of a facility that meets the project performance standards as defined in the Specifications.
2. Completion of the Project on schedule.
3. Conformance to budgetary requirements and limitations.

C. It is recognized that safety, liability limitation, avoidance of litigation, reputation, good will, and other factors are of significant importance to the parties involved.

D. Through partnering, it is UTILITIES intent that the parties will develop an open, communicative relationship such that agreement can be reached on the primary goals of the Project and the methods that will be used to accomplish them. The parties will mutually develop a communication framework and a conflict resolution system to be used throughout the Project.

E. The establishment of a partnering relationship will not change or modify the Terms and Conditions of the Contract and will not relieve the parties of the requirements of the Contract.

1.02 SCHEDULING

A. Initial Workshop: A workshop will be scheduled by the CONSTRUCTION MANAGER prior to beginning Work onsite.

B. Additional Sessions: Quarterly partnering sessions may be held throughout the Project to confirm the relationship and assure the partnering effort continues to be successful. These sessions may take the form of a formal evaluation measuring success towards meeting the established goals and objectives.

1.03 ATTENDEES

A. The following persons will be expected to attend partnering sessions, at a minimum:

1. CONTRACTOR:
   a. Project Manager.
   b. Project Superintendent.
   c. Project Foremen.
   d. Representatives from major Subcontractors.
2. UTILITIES: Project Manager.
3. CONSTRUCTION MANAGER:
   a. Project Manager.
   b. Task Leads as appropriate.
   c. Resident Project Representative(s).
4. ENGINEER.
   a. Project Manager.
   b. Task Leads as appropriate.

B. Other attendees who may attend:

1. Lake Pueblo State Parks.
2. Reclamation.

1.04 FACILITATOR

A. A partnering facilitator employed by UTILITIES will help establish and monitor the partnering relationship.

PART 2 PRODUCTS (NOT USED)

PART 3 EXECUTION (NOT USED)

END OF SECTION

SECTION 01 35 29
HEALTH AND SAFETY

PART 1 GENERAL

1.01 WORK INCLUDED

A. Accomplish work completed in accordance with the CONTRACTOR's Site Health and Safety Plan as submitted.

1.02 SUBMITTALS

A. Action Submittals:

1. Safety Plan:
   a. Comply with Exhibit J, Minimum Standard for Contractor Site Safety Plan.
   b. Comply with Reclamation Safety and Health Standards for construction at Lake Pueblo State Park. These standards can be found at http://www.usbr.gov/ssle/safety/RSHS/rshs.html. Reclamation approval of CONTRACTOR's site Health and Safety Plan is required. CONSTRUCTION MANAGER to coordinate obtaining Reclamation approval.
   c. Specifically address safety issues within the motor cross park in the CONTRACTOR's site Health and Safety Plan.
2. Emergency Response Plan.
3. Emergency Preparedness Plans.

B. Informational Submittals:

1. Material Safety Data Sheets (MSDS): Provide MSDSs for chemicals brought to or stored on the site.

PART 2 PRODUCTS (NOT USED)

PART 3 EXECUTION

3.01 GENERAL

A. Comply with CONTRACTOR's Site Health and Safety Plan for the health and safety of persons and property in the vicinity of the Work area. Noncompliance by CONTRACTOR or its personnel with the Site Health and Safety Plan is grounds for a stop work order.

B. UTILITIES' safety requirements are furnished for information only. CONTRACTOR shall enforce its plan for its personnel.

C. Develop and maintain, for the duration of the work, a safety program that will effectively implement required safety provisions. Appoint a Site Health and Safety Officer qualified to supervise and enforce compliance with the safety program. Maintain at the jobsite, safety equipment applicable to the Work, including articles necessary for administering first-aid to the injured, and establish a procedure for the immediate removal to a hospital or a doctor's care of any person (including Non-CONTRACTOR's personnel) who may be injured on the jobsite.

D. Inspect site safety measures each work day and document in daily report. Inspect site safety measures at least once on non-working day. Document inspections in next daily report.

E. Comply with applicable codes, standards, laws and regulations relating to the safety of persons and property or to the protection of persons and property from damage, injury, or loss.

F. Bear sole responsibility for the penalties imposed for noncompliance.

G. Submit Emergency Preparedness Plans for acceptance by the CONSTRUCTION MANAGER. Plans should include emergency rescue procedures and required training of construction personnel and rescuers.

END OF SECTION

SECTION 01 35 53
SECURITY PROCEDURES

PART 1 GENERAL (NOT USED)

PART 2 PRODUCTS (NOT USED)

PART 3 EXECUTION

3.01 GENERAL

A. Provide security measures as necessary to protect the Work and CONTRACTOR-furnished products not yet installed.

B. During non-working hours and on non-working days, provide continuous security services including onsite mobile patrols..

C. Inspect Site security measures and document in daily reports. Inspect site security measures at least once on non-working days. Document inspections on next daily report.

D. Store construction equipment in a secure area. Lock or disable to prevent use by unauthorized persons during non-working hours.

E. Designate CONTRACTOR's Site Health and Safety Officer to monitor the access control system.

3.02 ACCESS POINTS

A. Lock controlled access points, including private property gates, providing entry to Site and maintain a secure key control to prevent unauthorized access.

B. Close and secure gates and entry points by locking mechanism when not in use.

C. Specify approved access times and conditions on open gates.

3.03 ACCESS KEYS

A. Control access to keys to entry point locks.

B. Require recipients of keys to sign when receiving the key, and when returning the key.

C. Require recipients to advise the CONTRACTOR's Site Health and Safety Officer when they have lost or misplaced a key.

D. Provide non-duplicating type keys.

E. Change locks and keys when a key is reported lost or misplaced.

END OF SECTION

SECTION 01 41 26
PERMITS

PART 1 GENERAL

1.01 THE REQUIREMENT

A. The intent of this Section is to provide the known list of required permits for the Work under the Contract Documents. Completeness of the list is not guaranteed by UTILITIES. The absence of information does not relieve CONTRACTOR of responsibility for determining and verifying the extent of permits required and for obtaining permits.

B. Obtain permits required for the execution of the Work, as indicated. Furnish copies of permits obtained by CONTRACTOR to the CONSTRUCTION MANAGER, in accordance with Paragraph 1.04.B of this Section.

C. Comply with conditions of the permits and with Laws and Regulations applicable to the performance of the Work, in accordance with General Conditions, Sections 6.08 Construction and Environmental Permits and 6.09 Laws and Regulations.

D. Inform CONSTRUCTION MANAGER of any conflict between permit requirements and the Contract Documents. Comply with permit requirements.

E. Copies of permits obtained by UTILITIES will be provided by the CONSTRUCTION MANAGER. Maintain a notebook of permits onsite during construction.

1.02 SUMMARY OF PERMITS TO BE OBTAINED BY CONTRACTOR

A. CONTRACTOR Initiated and CONTRACTOR Obtained Permits: Apply for and obtain the permits listed in Paragraph 1.02.D of this Section.

B. UTILITIES Initiated and CONTRACTOR Obtained Permits: Some permit applications have been initiated by UTILITIES during design and will be provided to CONTRACTOR to assist CONTRACTOR in securing those permits. UTILITIES does not guarantee the accuracy of the permit applications, requirements, and/or fees. Apply for and obtain the permits listed in Paragraph 1.02.E of this Section.

C. Complete the permit applications, including those that have been initiated by UTILITIES, and submit to the permitting agency. Coordinate with the UTILITIES' Permit Coordinator as necessary to clarify permit requirements. Unless the permitted activity is specifically limited, permits obtained cover the entire Work.

D. Known Permits to be Initiated and Obtained by CONTRACTOR:

Permitting Authority	Permit Name	Permittee
Bureau of Reclamation	Special Work Permit	CONTRACTOR
CDOT	Transport Permit (for heavy / wide loads) (if required)	CONTRACTOR
CDOT	Temporary State Highway Access Permit (if required)	CONTRACTOR
CDPHE	Construction Dewatering General Permit	CONTRACTOR
CDPHE	General Permit for Hydrostatic Testing of Pipelines, Tanks, and Similar Vessels	CONTRACTOR
CDPHE	Air Pollution Emission Notice (APEN) and Land Development General Permit	CONTRACTOR
CDPHE	Demolition Permit (if required)	CONTRACTOR
CDPHE	Asbestos Abatement Permit (if required)	CONTRACTOR
Pueblo County Health Department	Demolition Permit (if required)	CONTRACTOR
Pueblo County	ROW Excavation Permit	CONTRACTOR
Pueblo County	Roadway Access Permit	CONTRACTOR
Pueblo County	Traffic Control Plan Submittal and Review	CONTRACTOR
Pueblo West Metro District	Potholing Permit	CONTRACTOR
Colorado Division of Water Resources	Notice of Intent (to drill dewatering wells, if required)	CONTRACTOR
Union Pacific Railroad	Right-of-Entry Agreement (if required)	CONTRACTOR

E. Known Permits Initiated by UTILITIES and to be Obtained by CONTRACTOR:

Permitting Authority	Permit Name	Permittee
CDPHE	Construction Stormwater General Permit	CONTRACTOR (SWMP to be prepared by UTILITIES, CONTRACTOR to obtain permit.)

1.03 SUMMARY OF PERMITS OR APPROVALS OBTAINED BY UTILITIES

A. The permits listed in Paragraphs 1.03.D and 1.03.E of this Section have been or are in the process of being obtained by UTILITIES.

B. Copies of the permits and their requirements, if available, will be provided by the CONSTRUCTION MANAGER. Unless the permitted activity is specifically limited, permits obtained cover the entire work. Comply with the requirements of the permits.

C. No additional compensation or additional Contract Times will be granted to CONTRACTOR because of delays by UTILITIES in obtaining permits unless CONTRACTOR is unable to proceed and complete Work and such delays are clearly demonstrated by the CONTRACTOR's Progress schedule. Provide UTILITIES at least 30 calendar days notice if the CONTRACTOR's schedule will be impacted due to permits not being secured.

D. Known Permits and/or Agreements Obtained by UTILITIES:

Permitting Authority	Permit Name	Permittee
Bureau of Reclamation	Record of Decision	UTILITIES
Bureau of Reclamation	Memorandum of Understanding	UTILITIES
Bureau of Reclamation	Right-of-Use Authorization	UTILITIES
U.S. Army Corps of Engineers	Clean Water Act Section 404 Permit	UTILITIES
Colorado State Parks	Memorandum of Understanding (MOU)	UTILITIES
CDHPE	Clean Water Act Section 401 – Water Quality Certification	UTILITIES

Permitting Authority	Permit Name	Permittee
CDOW	Fish and Wildlife Mitigation Plan Approval	UTILITIES
Colorado Historical Society: Office of Archaeology and Historic Preservation	Section 106 and Class III Cultural Resource Survey Concurrence	UTILITIES
Pueblo County	1041 Permit	UTILITIES

E. Known Permits and/or Agreements to be Obtained by UTILITIES:

Permitting Authority	Permit Name	Permittee
Bureau of Reclamation	Fountain Valley Authority Pipeline Easement Letter of Consent	UTILITIES
Bureau of Reclamation	299/Special Use Permit	UTILITIES
Pueblo County	Staging Area Plan	UTILITIES
Pueblo County	Haul Route Plan	UTILITIES
Union Pacific Railroad	Pipeline Crossing License Agreement & RPL Insurance	UTILITIES
Union Pacific Railroad	Wireline Crossing License Agreement & RPL Insurance	UTILITIES

1.04 INFORMATIONAL SUBMITTALS

A. Furnish submittals in accordance with Section 01 33 00, Submittal Procedures.

B. Submit copies of permits and approvals for construction as required by Laws and Regulations and governing agencies, including those to be obtained by CONTRACTOR or transferred to CONTRACTOR to the CONSTRUCTION MANAGER within 14 days of approval or transfer date.

C. Submit copies of all compliance reports or other documentation whether submitted by CONTRACTOR to a regulatory agency or provided to CONTRACTOR by a regulatory agency immediately upon transmittal or receipt.

D. Upon the completion of the work, submit evidence of permit close-out for the permits held by the CONTRACTOR, except stormwater-related permits, prior to UTILITIES issuance of Final Completion.

1.05 REASSIGNMENT OF CONSTRUCTION STORMWATER DISCHARGE PERMIT

A. Conduct inspection of temporary stabilization measures provided per Section 01 57 22, Stormwater Pollution and Temporary Erosion and Sediment Control, with the CONSTRUCTION MANAGER and UTILITIES' revegetation contractor prior to commencement of revegetation work to be conducted by UTILITIES' revegetation contractor.

B. Prior to commencement of UTILITIES' revegetation contractor's scope of work, UTILITIES' revegetation contractor will complete the CDPHE *Notice of Reassignment of Permit Coverage and General Permit Application for Stormwater Discharge Associated with Construction Activities* Application. The Application will serve to cover activities specified in UTILITIES' revegetation contractor's scope of work. The reassignment application creates a new permit for UTILITIES' revegetation contractor separate from the CONTRACTOR's original permit. The existing CONTRACTOR's construction stormwater discharge permit will not be terminated and will remain active through the completion of the CONTRACTOR's scope of work. Acquisition of UTILITIES' revegetation contractor's said permit in no way relieves the CONTRACTOR of responsibility or liability of the terms of the CONTRACTOR's CDPHE Construction Stormwater Discharge Permit or any other permits associated with the CONTRACTOR's scope of work.

E. UTILITIES' revegetation contractor will provide three (3) signed copies of the resulting reassignment permit. UTILITIES' revegetation contractor retains one copy, provides one copy to the CONSTRUCTION MANAGER and provides one copy to CONTRACTOR.

F. Upon completion of the CONTRACTOR's Work as accepted by the CONSTRUCTION MANAGER, CONTRACTOR will terminate the original construction stormwater discharge permit under the terms of the issuing agency. UTILITIES' revegetation contractor will terminate the reassigned portion of the construction stormwater discharge permit separately from the CONTRACTOR's activities.

G. Other permits required by UTILITIES' revegetation contractor will be obtained separately by UTILITIES' revegetation contractor.

PART 2 PRODUCTS (NOT USED)

PART 3 EXECUTION (NOT USED)

END OF SECTION

SECTION 01 42 13
ABBREVIATIONS AND ACRONYMS

PART 1 GENERAL

1.01 REFERENCE TO STANDARDS AND SPECIFICATIONS OF TECHNICAL SOCIETIES

A. Reference to standards and specifications of technical societies and reporting and resolving discrepancies associated therewith shall be as provided in the General Conditions, and as may otherwise be required herein and in the individual Specification sections.

B. Work specified by reference to published standard or specification of government agency, technical association, trade association, professional society or institute, testing agency, or other organization shall meet requirements or surpass minimum standards of quality for materials and workmanship established by designated standard or specification.

C. Where so specified, products or workmanship shall also meet or exceed additional prescriptive or performance requirements included within Contract Documents to establish a higher or more stringent standard of quality than required by referenced standard.

D. Where two or more standards are specified to establish quality, product and workmanship shall meet or exceed requirements of most stringent.

E. Where both a standard and a brand name are specified for a product in Contract Documents, proprietary product named shall meet or exceed requirements of specified reference standard.

F. Copies of standards and specifications of technical societies:

1. Copies of applicable referenced standards have not been bound in these Contract Documents.
2. Where copies of standards are needed, obtain a copy or copies directly from publication source and maintain in an orderly manner at the Site as Work Site records, available to CONTRACTOR's personnel, Subcontractors, UTILITIES, CONSTRUCTION MANAGER, and ENGINEER.

1.02 ABBREVIATIONS

A. Abbreviations for trade organizations and government agencies: Following is a list of construction industry organizations and government agencies to which references may be made in the Contract Documents, with abbreviations used.

1.	AA	Aluminum Association
2.	AABC	Associated Air Balance Council
3.	AAMA	American Architectural Manufacturers Association
4.	AASHTO	American Association of State Highway and Transportation Officials
5.	ABMA	American Bearing Manufacturers' Association
6.	ACI	American Concrete Institute
7.	AEIC	Association of Edison Illuminating Companies
8.	AGA	American Gas Association
9.	AGMA	American Gear Manufacturers' Association
10.	AI	Asphalt Institute
11.	AISC	American Institute of Steel Construction
12.	AISI	American Iron and Steel Institute
13.	AITC	American Institute of Timber Construction
14.	ALS	American Lumber Standards
15.	AMCA	Air Movement and Control Association
16.	ANSI	American National Standards Institute
17.	APA	APA – The Engineered Wood Association
18.	API	American Petroleum Institute
19.	APWA	American Public Works Association
20.	ARI	Air-Conditioning and Refrigeration Institute
21.	ASAE	American Society of Agricultural Engineers
22.	ASCE	American Society of Civil Engineers
23.	ASHRAE	American Society of Heating, Refrigerating and Air-Conditioning Engineers, Inc.
24.	ASME	American Society of Mechanical Engineers
25.	ASNT	American Society for Nondestructive Testing
26.	ASTM	ASTM International
27.	AWI	Architectural Woodwork Institute
28.	AWPA	American Wood Preservers' Association
29.	AWPI	American Wood Preservers' Institute
30.	AWS	American Welding Society
31.	AWWA	American Water Works Association
32.	BHMA	Builders Hardware Manufacturers' Association
33.	CBM	Certified Ballast Manufacturer
34.	CDA	Copper Development Association
35.	CGA	Compressed Gas Association
36.	CISPI	Cast Iron Soil Pipe Institute
37.	CMAA	Crane Manufacturers' Association of America
38.	CRSI	Concrete Reinforcing Steel Institute

39.	CS	Commercial Standard
40.	CSA	Canadian Standards Association
41.	CSI	Construction Specifications Institute
42.	DIN	Deutsches Institut für Normung e.V.
43.	DIPRA	Ductile Iron Pipe Research Association
44.	EIA	Electronic Industries Alliance
45.	EJCDC	Engineers Joint Contract Documents' Committee
46.	ETL	Electrical Test Laboratories
47.	FAA	Federal Aviation Administration
48.	FCC	Federal Communications Commission
49.	FDA	Food and Drug Administration
50.	FEMA	Federal Emergency Management Agency
51.	FIPS	Federal Information Processing Standards
52.	FM	Factory Mutual
53.	Fed. Spec.	Federal Specifications (FAA Specifications)
54.	FS	Federal Specifications and Standards (Technical Specifications)
55.	FVA	Fountain Valley Authority
56.	GA	Gypsum Association
57.	GANA	Glass Association of North America
58.	HI	Hydraulic Institute
59.	HMI	Hoist Manufacturers' Institute
60.	ICBO	International Conference of Building Officials
61.	ICEA	Insulated Cable Engineers' Association
62.	IEEE	Institute of Electrical and Electronics Engineers, Inc.
63.	IESNA	Illuminating Engineering Society of North America
64.	IFI	Industrial Fasteners Institute
65.	IGMA	Insulating Glass Manufacturer's Alliance
66.	INDA	Association of the Nonwoven Fabrics Industry
67.	ISA	Instrumentation, Systems, and Automation Society
68.	ISO	International Organization for Standardization
69.	ITL	Independent Testing Laboratory
70.	JIC	Joint Industry Conferences of Hydraulic Manufacturers
71.	MIA	Marble Institute of America
72.	MIL	Military Specifications
73.	MMA	Monorail Manufacturers' Association
74.	NAAMM	National Association of Architectural Metal Manufacturers
75.	NACE	NACE International
76.	NBS	National Bureau of Standards
77.	NEBB	National Environmental Balancing Bureau
78.	NEC	National Electrical Code

79.	NECA	National Electrical Contractor's Association
80.	NEMA	National Electrical Manufacturers' Association
81.	NESC	National Electrical Safety Code
82.	NETA	InterNational Electrical Testing Association
83.	NFPA	National Fire Protection Association
84.	NHLA	National Hardwood Lumber Association
85.	NICET	National Institute for Certification in Engineering Technologies
86.	NIST	National Institute of Standards and Technology
87.	NRCA	National Roofing Contractors Association
88.	NSF	NSF International
89.	NSPE	National Society of Professional Engineers
90.	NTMA	National Terrazzo and Mosaic Association
91.	NWWDA	National Wood Window and Door Association
92.	OSHA	Occupational Safety and Health Act (both Federal and State)
93.	PBWW	Pueblo Board of Water Works
94.	PCI	Precast/Prestressed Concrete Institute
95.	PDC	Pueblo Dam Connection
96.	PEI	Porcelain Enamel Institute
97.	PPI	Plastic Pipe Institute
98.	PS	Product Standards Section-U.S. Department of Commerce
99.	PW	Pueblo West
100.	PWMD	Pueblo West Metropolitan District
101.	RMA	Rubber Manufacturers' Association
102.	RUS	Rural Utilities Service
103.	S1	South 1
104.	SAE	Society of Automotive Engineers
105.	SDI	Steel Deck Institute
106.	SDI	Steel Door Institute
107.	SECWCD	Southeastern Colorado Water Conservancy District
108.	SDS	Southern Delivery System
109.	SJI	Steel Joist Institute
110.	SMACNA	Sheet Metal and Air Conditioning Contractors National Association
111.	SPI	Society of the Plastics Industry
112.	SSPC	The Society for Protective Coatings
113.	SWI	Steel Window Institute
114.	TEMA	Tubular Exchanger Manufacturers' Association
115.	TCA	Tile Council of America
116.	TIA	Telecommunications Industry Association
117.	UBC	Uniform Building Code
118.	UFC	Uniform Fire Code
119.	UL	Underwriters Laboratories Inc.

120.	UMC	Uniform Mechanical Code
121.	UPRR	Union Pacific Rail Road
122.	USBR	U.S. Bureau of Reclamation
123.	WCLIB	West Coast Lumber Inspection Bureau
124.	WWPA	Western Wood Products Association

PART 2 PRODUCTS (NOT USED)

PART 3 EXECUTION (NOT USED)

END OF SECTION

SECTION 01 43 33
MANUFACTURERS' FIELD SERVICES

PART 1 GENERAL

1.01 DEFINITIONS

A. Person-Day: One person for 8 hours within regular working hours.

1.02 QUALIFICATION OF MANUFACTURER'S REPRESENTATIVE

A. Authorized representative of the manufacturer, factory trained, and experienced in the technical applications, installation, operation, and maintenance with full authority by the manufacturer to issue the certifications required of the manufacturer. Additional qualifications may be specified elsewhere.

B. Representative subject to acceptance by CONSTRUCTION MANAGER. No substitute representatives will be allowed unless prior written approval by such has been given.

PART 2 PRODUCTS (NOT USED)

PART 3 EXECUTION

3.01 FULFILLMENT OF SPECIFIED MINIMUM SERVICES

A. Furnish manufacturers' services when required by an individual specification section, to meet the requirements of this Section.

B. Where time is necessary in excess of that stated in the Specifications for manufacturers' services, or when a minimum time is not specified, the time required to perform the specified services will be considered incidental.

C. Schedule manufacturer' services to avoid conflict with other onsite testing or other manufacturers' onsite services.

D. Determine, before scheduling services, that conditions necessary to allow successful testing have been met.

E. Only those days of service approved by CONSTRUCTION MANAGER will be credited to fulfill the specified minimum services.

F. When specified in individual specification sections, manufacturer's onsite services shall include:

1. Assistance during product (system, subsystem, or component) installation to include observation, guidance, instruction of CONTRACTOR's assembly, erection, installation or application procedures.
2. Inspection, checking, and adjustment as required for product (system, subsystem, or component) to function as warranted by manufacturer and necessary to furnish Manufacturer's Certificate of Proper Installation.
3. Providing, on a daily basis, copies of manufacturers' representatives field notes and data to CONSTRUCTION MANAGER.
4. Revisiting the Site as required to correct problems and until installation and operation are acceptable to CONSTRUCTION MANAGER.
5. Resolution of assembly or installation problems attributable to, or associated with, respective manufacturer's products and systems.
6. Additional requirements may be specified elsewhere.

3.02 MANUFACTURER'S CERTIFICATE OF COMPLIANCE

A. When specified in individual Specification section, submit prior to shipment of product or material.

3.03 MANUFACTURER'S CERTIFICATE OF PROPER INSTALLATION

A. When so specified, a Manufacturer's Certificate of Proper Installation form, a copy of which is attached to this section, shall be completed and signed by the equipment manufacturer's representative.

B. Such form shall certify that the signing party is a duly authorized representative of the manufacturer, is empowered by the manufacturer to inspect, approve, and operate their equipment and is authorized to make recommendations required to assure that the equipment is complete and operational.

3.04 SUPPLEMENTS

A. The supplements listed below, following "End of Section," are part of this Specification.

1. Forms: Manufacturer's Certificate of Proper Installation.

END OF SECTION

SUPPLEMENT

MANUFACTURER'S CERTIFICATE OF PROPER INSTALLATION

OWNER _____ EQPT SERIAL NO:_____

EQPT TAG NO:_____ EQPT/SYSTEM:_____

PROJECT NO:_____ SPEC. SECTION:_____

I hereby certify that the above-referenced equipment/system has been:

(Check Applicable)

- ☐ Installed in accordance with Manufacturer's recommendations.
- ☐ Inspected, checked, and adjusted.
- ☐ Serviced with proper initial lubricants.
- ☐ Electrical and mechanical connections meet quality and safety standards.
- ☐ Applicable safety equipment has been properly installed.
- ☐ Functional tests.
- ☐ System has been performance tested, and meets or exceeds specified performance requirements. (When complete system of one manufacturer)

Note: Attach any performance test documentation from manufacturer.

Comments:_____

_____

_____

_____

_____

I, the undersigned Manufacturer's Representative, hereby certify that I am (i) a duly authorized representative of the manufacturer, (ii) empowered by the manufacturer to inspect, approve, and operate his equipment and (iii) authorized to make recommendations required to assure that the equipment furnished by the manufacturer is complete and operational, except as may be otherwise indicated herein. I further certify that all information contained herein is true and accurate.

Date:_____, 20___

Manufacturer:_____

By Manufacturer's Authorized Representative: _____
(Authorized Signature)

SECTION 01 45 16.13
CONTRACTOR QUALITY CONTROL

PART 1 GENERAL

1.01 REFERENCES

A. The following is a list of standards that may be referenced in this section:

1. ASTM International (ASTM):
   a. D3740, Evaluation of Agencies Engaged in the Testing and/or Inspection of Soil and Rock as Used in Engineering Design and Construction.
   b. E329, Use in the Evaluation of Testing and Inspection Agencies as Used in Construction.

1.02 DEFINITIONS

A. CONTRACTOR Quality Control (CQC): The means by which CONTRACTOR ensures that the construction, to include that performed by its subcontractors and suppliers, complies with the requirements of the Contract.

1.03 SUBMITTALS

A. Action Submittals:

1. CQC Plan: Submit, not later than 30 days after receipt of Notice to Proceed.

B. Informational Submittals:

1. CQC Report: Submit, weekly, an original and one copy in report form.

1.04 OWNER'S QUALITY ASSURANCE

A. Work is subject to UTILITIES' quality assurance inspection and testing at locations and at reasonable times before acceptance to ensure strict compliance with the terms of the Contract Documents.

B. Except as noted in the Paragraph B or otherwise in the Contract Documents, perform and pay for Tests and Inspections.

1. UTILITIES' testing agency will perform onsite soils, asphalt, and concrete testing services. CONTRACTOR shall pay for re-testing from failed tests by subtracting the amount from CONTRACTOR's period progress payments.

2. UTILITIES' testing agency will perform onsite Certified Welding Inspection in accordance with Section 33 05 01.02, Welded Steel Pipe and Fittings—Weld Before Backfill.

C. UTILITIES' quality assurance inspections and tests are for the sole benefit of UTILITIES and do not:

1. Relieve responsibility for providing adequate quality control measures;
2. Relieve responsibility for damage to or loss of the material before acceptance;
3. Constitute or imply acceptance; or
4. Affect the continuing rights of UTILITIES after acceptance of the completed Work.

D. The presence or absence of a quality assurance inspector does not provide relief from any Contract requirement.

E. Promptly furnish facilities, labor, and material reasonably needed for performing such safe and convenient inspections and tests as may be required by CONSTRUCTION MANAGER.

F. Pay for additional cost of inspection or test when Work is not ready at the time specified by CONTRACTOR for inspection or test, or when prior rejection makes re-inspection or retest necessary. Quality assurance inspections and tests will be performed in a manner that will not unnecessarily delay the Work.

PART 2 PRODUCTS (NOT USED)

PART 3 EXECUTION

3.01 GENERAL

A. Maintain an adequate inspection system and perform such inspections as will ensure that the Work conforms to the Contract Documents.

B. Maintain complete inspection records and make them available to UTILITIES and CONSTRUCTION MANAGER.

C. The quality control system shall consist of plans, procedures, and organization necessary to produce an end product that complies with the Contract Documents. The system shall cover construction and demolition operations, both onsite and offsite, including Work by Subcontractors, fabricators, suppliers and purchasing agents, and shall be keyed to the proposed construction sequence.

3.02 COORDINATION MEETING

A. After the Preconstruction Conference, but before start of construction, and prior to acceptance of the CQC Plan, schedule a meeting with CONSTRUCTION MANAGER and UTILITIES' to discuss the quality control system.

B. Develop a mutual understanding of the system details, including the forms for recording the CQC operations, control activities, testing, administration of the system for both onsite and offsite Work, and the interrelationship of CONTRACTOR's management and control with the UTILITIES' Quality Assurance.

C. There may be occasions when subsequent conferences may be called by either party to reconfirm mutual understandings and/or address deficiencies in the CQC system or procedures that may require corrective action.

3.03 QUALITY CONTROL ORGANIZATION

A. CQC System Manager:

1. Designate an individual within organization who will be responsible for overall management of CQC and have the authority to act in CQC matters.
2. CQC System Manager may perform other duties on the Project, so long as CQC is the first priority for this individual.
3. CQC System Manager must be an experienced construction person, with a minimum of 3 years construction experience on similar type Work.
4. CQC System Manager will report to the CONTRACTOR's project manager or someone higher in the organization. Project manager in this context means the individual with responsibility for the overall quality and production management of the Project.
5. CQC System Manager is required to be onsite during construction; periods of absence may not exceed 2 weeks at any one time.
6. Identify an alternate for CQC System Manager to serve with full authority during the System Manager's absence. The requirements for the alternate are the same as for designated CQC System Manager.

B. CQC Staff:

1. Designate CQC staff, present at the Site during work activities, with authority to take actions necessary to ensure compliance with the Contract Documents. CQC staff members will be subject to acceptance by CONSTRUCTION MANAGER.
2. CQC staff will take direction from CQC System Manager in matters pertaining to QC.

3. CQC staff must be of sufficient size to ensure adequate QC coverage of Work phases, work shifts, and work crews involved in the construction. These personnel may perform other duties, but must be qualified by experience and technical training to perform their assigned QC responsibilities and must be allowed sufficient time to carry out these responsibilities.
4. The strength of the CQC staff may vary during any specific Work period to cover the needs of the Project. Add additional staff when necessary for a proper CQC organization.

C. Organizational Changes: Obtain CONSTRUCTION MANAGER's acceptance before replacing any member of the CQC staff. Requests for changes to include name, qualifications, duties, and responsibilities of the proposed replacement.

3.04 QUALITY CONTROL PHASING

A. CQC shall include at least three phases of control to be conducted by CQC System Manager for definable features of Work, as follows:

1. Preparatory Phase:
   a. Notify CONSTRUCTION MANAGER at least 48 hours in advance of beginning any of the required action of the preparatory phase.
   b. Include a meeting conducted by the CQC System Manager and attended by the superintendent, other CQC personnel (as applicable), and the foreman responsible for the definable feature. The CQC System Manager shall instruct applicable CQC staff as to the acceptable level of workmanship required to meet Contract requirements.
   c. Document the results of the preparatory phase meeting by separate minutes prepared by the CQC System Manager and attached to the QC report.
   d. Perform prior to beginning Work on each definable feature of Work:
      1) Review applicable Contract Specifications.
      2) Review applicable Contract Drawings.
      3) Verify that materials and/or equipment have been tested, submitted, and approved.
      4) Verify that provisions have been made to provide required control inspection and testing.
      5) Examine the Work area to verify that required preliminary Work has been completed and is in compliance with the Contract.

6) Perform a physical examination of required materials, equipment, and sample Work to verify that they are on hand, conform to approved Shop Drawing or submitted data, and are properly stored.
7) Review the appropriate activity hazard analysis to verify safety requirements are met.
8) Review procedures for constructing the Work, including repetitive deficiencies.
9) Document construction tolerances and workmanship standards for that phase of the Work.
10) Check to verify that the plan for the Work to be performed, if so required, has been accepted by CONSTRUCTION MANAGER.

2. Initial Phase:
   a. Accomplish at the beginning of a definable feature of Work:
      1) Notify CONSTRUCTION MANAGER at least 48 hours in advance of beginning the initial phase.
      2) Perform prior to beginning Work on each definable feature of Work:
         a) Review minutes of the preparatory meeting.
         b) Check preliminary Work to verify compliance with Contract requirements.
         c) Verify required control inspection and testing.
         d) Establish level of workmanship and verify that it meets minimum acceptable workmanship standards. Comparison with sample panels is appropriate.
         e) Resolve differences.
         f) Check safety to include compliance with and upgrading of the safety plan and activity hazard analysis. Review the activity analysis with each worker.
      3) Preparation of separate minutes of this phase by the CQC System Manager attached to the QC report. Indicate exact location of initial phase for future reference and comparison with follow-up phases.
      4) Repeat the initial phase for each new crew to work onsite, or any time acceptable specified quality standards are not being met.
3. Follow-up Phase:
   a. Perform daily checks to verify continuing compliance with Contract requirements, including control testing, until completion of the particular feature of Work.
   b. Make daily checks a matter of record in the CQC documentation and document specific results of inspections for features of Work for the day or shift.

c. Conduct final follow-up checks and correct deficiencies prior to the start of additional features of Work that will be affected by the deficient Work. Constructing upon or concealing nonconforming Work will not be allowed.

4. Additional Preparatory and Initial Phases: Additional preparatory and initial phases may be conducted on the same definable features of Work as determined by CONSTRUCTION MANAGER if the quality of ongoing Work is unacceptable; or if there are changes in the applicable QC staff or in the onsite production supervision or work crew; or if work on a definable feature is resumed after a substantial period of inactivity, or if other problems develop.

3.05 CONTRACTOR QUALITY CONTROL PLAN

A. General:

1. Identify personnel, procedures, control, instructions, test, records, and forms to be used.
2. An interim plan for the first 30 days of operation will be considered.
3. Construction will be permitted to begin only after acceptance of the CQC Plan or acceptance of an interim plan applicable to the particular feature of Work to be started.
4. Work outside of the features of Work included in an accepted interim plan will not be permitted to begin until acceptance of a CQC Plan or another interim plan containing the additional features of Work to be started.

B. Content:

1. Cover the intended CQC organization for the entire Contract and include the following, as a minimum:
   a. Organization: Description of the quality control organization, including a chart showing lines of authority and acknowledgment that the CQC staff will implement the three-phase control system (see Paragraph QC Phasing) for aspects of the Work specified.
   b. CQC Staff: The name, qualifications (in resume format), duties, responsibilities, and authorities of each person assigned a QC function.
   c. Letters of Authority: A copy of a letter to the CQC System Manager signed by an authorized official of the firm, describing the responsibilities and delegating sufficient authorities to adequately perform the functions of the CQC System Manager, including authority to stop Work which is not in compliance with the Contract. The CQC System Manager shall issue letters of direction to other various quality control representatives outlining duties, authorities and responsibilities. Include copies of these letters in the CQC Plan.

d. Submittals: Procedures for scheduling, reviewing, certifying, and managing submittals, including those of Subcontractors, offsite fabricators, suppliers and purchasing agents.
e. Testing: Control, verification and acceptance testing procedures for each specific test to include the test name, frequency, specification paragraph containing the test requirements, the personnel and laboratory responsible for each type of test, and an estimate of the number of tests required.
f. Procedures for tracking preparatory, initial, and follow-up control phases and control, verification, and acceptance tests, including documentation.
g. Procedures for tracking deficiencies from identification through acceptable corrective action. These procedures will establish verification that identified deficiencies have been corrected.
h. Reporting procedures, including proposed reporting formats; include a copy of the CQC report form.

C. Acceptance of Plans: Acceptance of the basic and addendum CQC plans is required prior to the start of construction. Acceptance is conditional and will be predicated on satisfactory performance during the construction. CONSTRUCTION MANAGER reserves the right to require changes in the CQC plan and operations including removal of personnel, as necessary, to obtain the quality specified.

D. Notification of Changes: After acceptance of the CQC plan, notify CONSTRUCTION MANAGER, in writing, a minimum of 7 calendar days prior to any proposed change. Proposed changes are subject to acceptance by CONSTRUCTION MANAGER.

3.06 CONTRACTOR QUALITY CONTROL REPORT

A. As a minimum, prepare a CQC report for every 7 calendar days. Account for every day throughout the life of the Contract. Sign and date reports by CQC System Manager. Include copies of test reports and copies of reports prepared by QC staff.

B. Maintain current records of quality control operations, activities, and tests performed, including the Work of Subcontractors and suppliers.

C. Maintain records on an acceptable form, to include complete description of inspections, the results of inspections, daily activities, tests, and other items, including but not limited to the following:

1. CONTRACTOR/Subcontractor and their areas of responsibility.
2. Operating plant/equipment with hours worked, idle, or down for repair.
3. Work performed today, giving location, description, and by whom. When a network schedule is used, identify each phase of Work performed each day by activity number.

4. Test and/or control activities performed with results and references to specifications/plan requirements. Identify the control phase (Preparatory, Initial, Follow-up). List deficiencies noted along with corrective action.
5. Material received with statement as to its acceptability and storage.
6. Identify submittals reviewed, with Contract reference, by whom, and action taken.
7. Offsite surveillance activities, including actions taken.
8. Job safety evaluations stating what was checked, results, and instructions or corrective actions.
9. List instructions given/received and conflicts in Drawings and/or Specifications.
10. CONTRACTOR's verification statement.
11. Indicate a description of trades working on the Project; the number of personnel working; weather conditions encountered; and any delays encountered.
12. Cover both conforming and deficient features in records and include a statement that equipment and materials incorporated in file work and workmanship comply with the Contract.

3.07 SUBMITTAL QUALITY CONTROL

A. Submit submittals as specified in Section 01 33 00, Submittal Procedures. The CQC organization will be responsible for certifying that submittals are in compliance with the Contract requirements. Other forms may be used as approved.

3.08 TESTING QUALITY CONTROL

A. Testing Procedure:

1. Perform tests specified or required to verify that control measures are adequate to provide a product which conforms to Contract requirements. Procure services of a licensed testing laboratory where required. Perform the following activities and record the following data:
   a. Verify testing procedures comply with contract requirements.
   b. Verify facilities and testing equipment are available and comply with testing standards.
   c. Check test instrument calibration data against certified standards.
   d. Verify recording forms and test identification control number system, including the test documentation requirements, have been prepared.
   e. Documentation:
      1) Record results of tests taken, both passing and failing, on the CQC report for the date taken.

2) Include specification paragraph reference, location where tests were taken, and the sequential control number identifying the test.
3) Actual test reports may be submitted later, if approved by CONSTRUCTION MANAGER, with a reference to the test number and date taken.
4) Provide directly to CONSTRUCTION MANAGER an information copy of tests performed by an offsite or commercial test facility. Test results shall be signed by an engineer registered in the state where the tests are performed.
5) Failure to submit timely test reports, as stated, may result in nonpayment for related Work performed and disapproval of the test facility for this Contract.

B. Testing Laboratories: Laboratory facilities, including personnel and equipment, utilized for testing soils, concrete, asphalt and steel are required to meet criteria detailed in ASTM D3740 and ASTM E329, and be accredited by the American Association of Laboratory Accreditation (AALA), National Institute of Standards and Technology (NIST), National Voluntary Laboratory Accreditation Program (NVLAP), the American Association of State Highway and Transportation Officials (AASHTO), or other approved national accreditation authority. Personnel performing concrete testing shall be certified by the American Concrete Institute (ACI).

3.09 COMPLETION INSPECTION

A. CQC System Manager to conduct an inspection of the Work at the completion of Work or any milestone established by a completion time stated in the Contract.

B. Punchlist:

1. CQC System Manager to develop a punchlist of items that do not conform to the Contract requirements.
2. Include punchlist in the CQC report, indicating the estimated date by which the deficiencies will be corrected.
3. CQC System Manager or staff to make a second inspection to ascertain that deficiencies have been corrected and so notify the CONSTRUCTION MANAGER.
4. These inspections, and any deficiency corrections required, will be accomplished within the time stated for completion of the entire Work or any particular increment thereof if the Project is divided into increments by separate completion dates.

END OF SECTION

SECTION 01 51 00
TEMPORARY UTILITIES

PART 1 GENERAL (NOT USED)

PART 2 PRODUCTS (NOT USED)

PART 3 EXECUTION

3.01 POWER

A. No electric power is available at Site. Make arrangements to obtain and pay for electrical power. Power facilities must be placed within the Work Limits.

3.02 LIGHTING

A. Provide temporary lighting to meet applicable safety requirements to allow erection, application, or installation of materials and equipment, and observation or inspection of the Work.

B. Provide temporary lighting for the safety of persons or property, or for the protection of property from damage, injury, or loss in compliance with applicable codes, standards, laws, and regulations.

C. Design lighting used for night work to prevent spillover, nuisance, or hazard effects of light and glare on adjacent locations and uses of land. Position lighting, to the extent practical, away from residences and oncoming traffic. The use of cut-off type luminaries is required. Shield light bulbs and light sources so they are not visible from any adjacent lot or public roadway. Spillover of lighting to adjacent properties will not exceed 0.5 foot candle measured at any point 10 feet beyond the property line.

D. Position lighting to shine away from residences and oncoming traffic.

E. Install baffles on construction lighting fixtures to direct light onto the construction activity only in locations where safety is a concern, scenic quality will be affected, or near occupied homes and businesses.

F. Provide individual light sources not exceeding 150,000 lumens per light source (typical of a 1250W metal halide light). Do not exceed light standards of 24 feet in height. Do not exceed 70 dB at 25 feet from the source for generators used to power light sources.

3.03 HEATING, COOLING, AND VENTILATING

A. Provide as required to maintain adequate environmental conditions to facilitate progress of the Work, to meet specified minimum conditions for installation of materials, and to protect materials, equipment, and finishes from damage due to temperature or humidity.

B. Provide adequate forced air ventilation of enclosed areas to cure installed materials, to dispense humidity, and to prevent hazardous accumulations of dust, fumes, vapors, or gases.

3.04 WATER

A. Potable water is not available at the Site.

B. Provide potable water for drinking by construction personnel during construction.

C. Water for construction purposes will be available near the Site. See Section 01 31 13, Project Coordination.

3.05 SANITARY AND PERSONNEL FACILITIES

A. Provide and maintain facilities for CONTRACTOR's employees, subcontractors, and other onsite employers' employees. Service, clean, and maintain facilities and enclosures.

3.06 TELEPHONE SERVICE

A. Provide wireless telephone service for CONTRACTOR's use during construction.

3.07 FIRE PROTECTION

A. Furnish and maintain on Site adequate firefighting equipment capable of extinguishing incipient fires. Comply with applicable parts of National Fire Prevention Standard for Safeguarding Building Construction Operations (NFPA No. 241).

END OF SECTION

SECTION 01 52 00
CONSTRUCTION FACILITIES

PART 1 GENERAL

1.01 GENERAL

A. Approximately 1,000 square feet of unfurnished field office space, contiguous with UTILITIES and CONSTRUCTION MANAGER's space will be provided to the CONTRACTOR by UTILITIES at 59 North Laser, Pueblo West, CO. Separately insure the site for vandalism, theft, and damages to CONTRACTOR vehicles and equipment stored on site. Provide separate internet access.

PART 2 PRODUCTS (NOT USED)

PART 3 EXECUTION (NOT USED)

END OF SECTION

SECTION 01 55 13
TEMPORARY ACCESS ROADS AND PARKING AREAS

PART 1 GENERAL (NOT USED)

PART 2 PRODUCTS (NOT USED)

PART 3 EXECUTION

3.01 ACCESS ROADS AND DETOURS

A. Construction vehicles to use existing roads designated in the Contract Documents for transportation of construction equipment and materials. Construct required off-road access roads only within Work Limits.

B. Maintain drainage ways. Install and maintain culverts to allow water to flow beneath access roads. Provide corrosion-resistant culvert pipe of adequate strength to resist construction loads.

C. Provide gravel, crushed rock, or other stabilization material to permit access by motor vehicles.

D. Maintain road grade and crown to eliminate potholes, rutting, and other irregularities that restrict access.

E. Upon completion of construction, restore ground surface disturbed by construction to original grade, repair roads damaged by construction activities, or leave access roads in condition suitable for future use where designated on the Drawings. Replace damaged or broken culverts with new culvert pipe of same diameter and material under access roads that are designated to remain in place.

F. Install stop signs at access locations from work limits to public roadway for traffic exiting the site.

G. Vehicle Counter:

1. Purchase and install vehicle counter with a count recorder at location shown on Drawings.
2. Record the daily vehicle count totals and report on a monthly basis to the CONSTRUCTION MANAGER. Counts are expected in one-direction only.
3. Upon completion of the Work, hand over the vehicle counter components to the CONSTRUCTION MANAGER.

4. Manufacturers and Products:
   a. Sensource Item reference: TC-RS50-R-O Magnetic Vehicle counter with a count recorder; Sensource Item ref: PCDC-USB1download cable and software; Sensource Item ref: SS-SOLAR-12V-18AH-BATTENCL which is a 12V, 18AH Battery, Controller and Enclosure; Sensource Item ref: -/SS-SOLAR-12V-30W-BRKT which is a Solar Panel, 12V, 30W, Mounting Bracket Assembly.

3.02 PARKING AREAS

A. Control vehicular parking to preclude interference with public traffic or parking, access by emergency vehicles, CONSTRUCTION MANAGER's operations, or construction operations.

B. Provide parking facilities for personnel working on the Project. Do not park personal vehicles or equipment within the traveled-way of existing roads, highways, and streets or along designated haul routes.

3.03 VEHICULAR TRAFFIC

A. Prepare a Traffic Control Plan for approval by state and local traffic authorities and as specified in Section 01 55 26, Traffic Control.

B. Comply with local and state laws and regulations regarding closing or restricting use of public streets or highways. Do not close any public or private road, except by written permission of proper authority. Assure the least possible obstruction to traffic and normal commercial pursuits.

C. Conduct the Work to interfere as little as possible with public travel, whether vehicular or pedestrian.

D. Whenever it is necessary to cross, close, or obstruct roads, driveways, and walks, whether public or private, provide and maintain suitable and safe bridges, detours, or other temporary expedients for accommodation of public and private travel.

E. Construct wheel wash and gravel access at entrance and exit points of construction area in accordance with the Drawings, General Notes, Standard Details, and as required by regulatory agencies.

END OF SECTION

SECTION 01 55 26
TRAFFIC CONTROL

PART 1 GENERAL

1.01 REFERENCES

A. The following is a list of standards that may be referenced in this section:

1. U.S. Department of Transportation: Manual of Uniform Traffic Control Devices for Streets and highways (MUTCD).
2. U.S. Department of Transportation: Manual of Uniform Traffic Control Devices for Street Construction Utility Work.
3. Colorado Department of Transportation (CDOT): Standard Specifications for Road and Bridge Construction (2011) (Latest Revisions).
4. U.S. Department of Transportation: Roadside Design Guide.
5. American Association of State Highway and Transportation Officials (AASHTO): Roadside Design Guide.
6. Pueblo County Roadway Design and Construction Standards.
7. Pueblo County Resolution No. 86-283, adopted January 1, 1987.

1.02 SUBMITTALS

A. Informational Submittals:

1. Personnel Qualifications: Traffic Control Supervisor.
2. Traffic Control Plans, Pueblo County Access Permits, Pueblo County Excavation Permits, and Others: Copies of permits and approvals for construction as required by Laws and Regulations and governing agencies.
3. Project Traffic Control Diary: Submit to CONSTRUCTION MANAGER on a weekly basis.

1.03 TEMPORARY TRAFFIC CONTROL

A. Scope: Furnish and maintain in place barricades, warning signs, lights, and other safety devices required to protect the work, divert traffic, and warn pedestrians of open excavations, unfilled trenches, and other areas or conditions that might be hazardous or dangerous during daylight or darkness. Devices must comply with NCHRP 350 criteria requirement. Maintain detours throughout the period of local construction in such a manner as to provide the least amount of disruption to normal traffic and pedestrian flow. Adhere to time limits and other restrictions as specified by Pueblo County, Bureau of Reclamation, and Lake Pueblo State Parks in the approval of the Traffic Control Plan.

B. Traffic Control Phasing Plan: Phasing Plan is required for construction work that requires traffic control plans.

1. Close only one-half of the roadway at one time for road crossings on roads with a classification other than "Local Road'. Should the Work necessitate closing the entire roadway, submit a written request to Pueblo County at the time of obtaining the permit. The request may be granted at the discretion of Pueblo County, in writing, after the written request has been submitted. Notify emergency services, including Pueblo County, Pueblo West Metropolitan District, the Pueblo County Sheriff's Department, the Colorado State Highway Patrol Division, the ambulance services, and the fire protection districts of closing, specifying the exact location, date, and time the roadway will be closed.
2. Written permission is waived should an emergency arise that necessitates closing a roadway. Notify the applicable agencies and Pueblo County immediately as required.
3. Take necessary precautions for the protection of work and the safety of the public. Where normal traffic flow is to be interrupted, provide, erect, and maintain necessary barricades, standard caution signs, warning signs, directional signs, flares and lights. Comply with the current edition of the MUTCD and any supplements thereto, including but not limited to the Colorado Supplement for signs and their placement.

C. Detour Routing Plan: Show sequences of construction affecting use of roadways, time required for each phase of the work, provisions for providing necessary access, and plans for signing, barricading, and striping to provide passages for pedestrians and vehicles.

D. Construction Access Traffic Control: Comply with the access locations shown on Haul Route Plan on the Drawings and SDS Haul Route Plan accepted by Pueblo County, Bureau of Reclamation, and Lake Pueblo State Parks. Submit and obtain required CONTRACTOR Pueblo County Access Permits.

E. Haul Route Plan: As specified in Section 01 14 13, Access to Site.

F. The following documents control the preparation of the Traffic Control Phasing and Detour Routing Plan and are listed in order of the order of precedence:

1. Governing jurisdiction requirements.
2. Drawings and Specifications for this project.
3. Manual on Uniform Traffic Control (MUTCD).
4. Colorado Department of Transportation Standard Specifications.
5. Colorado Department of Transportation M&S Standards.

G. When a device is not in use, it may be removed from the project for the period it is not needed. Remove devices temporarily not in use, as a minimum, from the shoulder area.

H. Installation and repair of right-of-way openings and excavations across or along any Pueblo County right-of-way or Pueblo West Metropolitan District roadway right-of-way are subjected to the requirements of Pueblo County Resolution 86-283.

I. Installation and repair of right-of-way openings and excavations across or along any Pueblo West Metropolitan District non roadway right-of-way or property are subjected to the requirements of Pueblo West Metro District.

J. Installation and repair of openings and excavations of roads and trails within Lake Pueblo State Park are subjected to the requirements of Bureau of Reclamation and Lake Pueblo State Park.

PART 2 PRODUCTS

2.01 TRAFFIC CONTROL SIGNING AND MARKING

A. Traffic control devices must conform to the MUTCD and CDOT Standard Specifications for Road and Bridge Construction (latest edition), Section 614, "Traffic Control Devices", and Section 713 "Traffic Control Materials.".

B. Provide reflectorized signs, barricades, and cones as required by the MUTCD. Comply with the following minimum requirements:

1. On low speed streets with posted speed limits of 40 mph or lower, use smooth surface enclosed lens Type II retroreflective sheeting.
2. On high speed streets with posted speed limits over 40 mph, use high performance bead-encapsulated or microprisms Type IIA and Type III retroreflective sheeting.

C. Replace signs, barricades, cones, etc. on which the reflective sheeting falls below the original requirement.

D. Install construction traffic control devices where they do not block or impede other existing traffic control devices, or sidewalks for pedestrians, disabled persons or bicyclists.

E. Continuously maintain construction zone traffic control devices in accordance with Section 630 of the CDOT Standard Specifications for Road and Bridge Construction (latest edition).

2.02 PORTABLE VARIABLE MESSAGE SIGN PANELS

A. Furnish portable message sign panel(s) as a device fully self-contained on a portable trailer, capable of being licensed for normal highway travel.

B. Place advance warning portable variable Message Sign Panel 7 days prior to any work on Purcell and Platteville Blvd. This sign must give exact dates and working hours for the work to be completed.

C. Include leveling and stabilization jacks as needed.

D. Use dot-matrix type panels with a minimum of three eight-character lines with either fluorescent yellow flip-disks legend and/or LED legend on a flat black background.

E. LED signs must have a pre-default message that activates before a power failure.

F. Signs must have its own solar power source with independent back-up battery powered source, capable of 360 degrees rotation and able to be elevated to a height of at least 5 feet above the ground to the bottom of the sign.

G. Signs must be capable of operating continuously for 10 days without any sun.

H. The sign should be visible from one-half mile under both day and night conditions.

I. Message should be legible from a minimum of 650 feet.

J. Provide signs that automatically adjust its light source to meet the legibility requirements during the hours of darkness.

K. Provide sign enclosure that is weather tight and provide a clear polycarbonate front cover.

L. Provide signs capable of changing and displaying sign messages and other sign features such as flash rates, and moving arrows.

M. Provide signs conforming to the following:

1. Provide flip-disks legend signs that have fluorescent ultraviolet blacklight bulbs.
2. In addition to the onboard solar power operation with battery back-up, provide signs capable of operating on a hard wire, 100-110V ac, external power source.
3. Provide electrical wiring, including connectors and switch controls necessary to allow sign functions required by the specification.

4. Include an operating and parts manual, wiring diagrams, and trouble-shooting guide for each sign.
5. Provide portable message sign capable of maintaining the required operations under Colorado mountain-winter weather conditions.
6. Furnish each sign with an attached license plate and mounting bracket.
7. Wire each sign with a 7-prong male electric plug for the brake light wiring system. NAPA Part No. TC 6215 Trailer Connector, or equivalent, is suitable to fulfill the requirements of this specification.

2.03 TEMPORARY MASKING SIGNS

A. Completely cover sign legend or portions thereof that conflict with the construction signing or Traffic Control Plan so that none of the covered sign or legend is visible to traffic. If the whole sign is to be covered, cover with a nontransparent material that covers the entire face of the sign. If partial legend is to be covered, cover with a material furnished with reflective sheeting and the same color as the masked panel.

B. Provide plywood, hard-board, sheet metal, aluminum, or reinforced plastic covering materials, durable enough to resist deterioration due to weathering and atmospheric conditions for the duration of the project. Examples are aluminum at least 0.040-inch thick, and plywood at least 3/8-inch thick. Do not use adhesives, glues, tapes, or mechanical fasteners that mar the face of the panel to be masked.

2.04 GENERAL

A. Remove portable construction traffic signs when not required. Mask or turn away from traffic permanently mounted construction traffic signs when not required. When work is suspended, or the project is in free time, and there is no condition requiring traffic control devices or construction traffic signs, mask construction traffic signs or turn away from traffic. If this condition is to exist for more than 30 days, remove construction traffic signs. When storing portable signs or supports within the project, remove beyond the clear zone and where they will not visible to traffic. Obtain approval by CONSTRUCTION MANAGER for storage areas.

B. Place or unmask the construction traffic signs for reduced speed limit signs and double fines signs no sooner than 4 hours prior to the start of work activities. The time when the double fine signing is to be placed or unmasked and location of the reduced speed limit signs and double fine signs to be as shown on the Pueblo County, Bureau of Reclamation, and Lake Pueblo State Parks approved Plans or as directed by CONSTRUCTION MANAGER.

C. Remove or mask double fine signing as soon as work activities are completed. Work activities are defined as construction and maintenance activities where workers are present in the clear zone, or there are existing hazards in the travel way, shoulders, or clear zones. Hazards include but are not limited to workers,

equipment, drop offs, lane closures, temporary guardrail, and other objects, both in the roadway and the adjacent roadside, that may affect the traveling public.

D. Clean the retroreflective surfaces of signs and other traffic control devices as frequently as necessary to preserve their legibility and retroreflectivity. Clean at a minimum once every 2 weeks.

E. Do not use vertical panels fabricated with vehicle wheel rims and steel drum channelizing.

F. Attach channelizing device (fixed) to the pavement in accordance with the manufacturer's recommendations. Anchoring methods or devices which penetrate the surface of the permanent pavement will not be permitted. Upon removal of the device, clean and/or patch the roadway surface as approved by the CONSTRUCTION MANAGER.

PART 3 EXECUTION

3.01 EMERGENCY SERVICE

A. Maintain a 24-hour, 7 days a week (including weekends and holidays) emergency service to remove, install, relocate, and maintain warning devices. Furnish to Pueblo County and the CONSTRUCTION MANAGER the name and telephone number of the Traffic Control Supervisor responsible for emergency service. In the event the Traffic Control Supervisor does not respond within 2 hours, or Pueblo County or the CONSTRUCTION MANAGER deems it necessary to call out other forces to accomplish emergency services, the CONTRACTOR will be responsible for the cost of such emergency services.

B. Notify Pueblo County immediately of any emergency and after any unplanned or emergency utility cut is made. In other cases, a 24-hour advance notice is required.

3.02 TEMPORARY TRAFFIC CONTROL PHASING

A. Schedule the work in such a manner as to comply with the staging and/or phasing requirements.

B. Submit for approval a Traffic Control Phasing Plan. Schedule the work to occur during normal working hours as specified in the General Conditions, and as approved by Pueblo County.

C. Notify Pueblo County in writing 2 weeks prior to the beginning of construction outside of Lake Pueblo State Parks and 48 hours prior to changing traffic patterns or phases.

3.03 TRAFFIC CONTROL PLANS

A. Submit traffic control plans to the Pueblo West Metropolitan District Department of Public Works and/or the Pueblo County Department of Public Works - Road and Bridge Division for approval for traffic control outside of Lake Pueblo State Park. The Traffic Control Plan must be signed by an individual certified by the Colorado Department of Transportation or the American Traffic Safety Services Association, as a Worksite Traffic Control Supervisor, whose signature constitutes certification that the plan meets or exceeds MUTCD Standards. Include a detailed drawing of the project location showing each phase of the project, a list of the posted speed limits throughout the project, and a detailed drawing of the traffic control measures to be employed at the Site. In an emergency situation, signing according to the MUTCD is required on the Site even though a permit will not be issued until after the excavation has taken place.

B. Submittal: Submit Traffic Control Plans for traffic control outside of Lake Pueblo State Park in drawing form for the review and approval of Pueblo County. Submit a Traffic Control Plan Submittal Form with each submittal. Complete the Submittal Form in its entirety (blank spaces, “same”, and “ditto” will not be accepted). Provide a night telephone number for the Traffic Control Supervisor to assure 24-hour availability. Submit Traffic Control Plans for street closure and major detours of local and/or through traffic to Pueblo County at least 10 calendar days in advance of the closure or detouring. Submit Traffic Control Plans not involving closures or major detours a minimum of three Pueblo County business days prior to implementation. Do not commence any phase of construction until the Traffic Control Plan has been approved. Do not revise the approved Traffic Control Plans without prior approval of Pueblo County. Submit revisions in accordance with the above requirements.

C. Submittal: Submit Traffic Control Plans for traffic control within Lake Pueblo State Park in drawing form for the review and approval of CONSTRUCTION MANAGER. Submit a Traffic Control Plan Submittal Form with each submittal. Complete the Submittal Form in its entirety (blank spaces, “same”, and “ditto” will not be accepted). Provide a night telephone number for the Traffic Control Supervisor to assure 24-hour availability. Submit Traffic Control Plans for street closure and major detours of local and/or through traffic to CONSTRUCTION MANAGER at least 10 calendar days in advance of the closure or detouring. Include trail closures. Submit Traffic Control Plans not involving closures or major detours a minimum of three business days prior to implementation. Do not commence any phase of construction until the Traffic Control Plan has been approved. Do not revise the approved Traffic Control Plans without prior approval of CONSTRUCTION MANAGER. Submit revisions in accordance with the above requirements.

D. Format: Include detailed signing, barricading, and traffic detouring information for each phase or stage of construction including as a minimum, type and number of devices, working hours, number and location of flaggers, and time restrictions, if any. Include a Method for Handling Traffic (MHT) Plan for each different phase of construction, which shows the proposed construction phasing and proposed traffic control devices consistent with the Traffic Control Plan. A new MHT is required and it is considered a different phase if at any time the MHT changes.

E. Copies of Approved Plan: Make available copies of the approved Traffic Control Plans onsite; submit 4 copies to the CONSTRUCTION MANAGER.

3.04 TRAFFIC CONTROL SUPERVISOR

A. Qualifications: Designate a Traffic Control Supervisor who will perform the Traffic Control Management and will be responsible for maintaining Traffic Control Devices in compliance with the approved Traffic Control Plan. The Traffic Control Supervisor will be either an employee of the CONTRACTOR, other than the superintendent, or an employee of a firm that has a subcontract for the overall Traffic Control Management for the Project. The Traffic Control Supervisor must be currently certified by the American Traffic Safety Services Association or Colorado Contractors Association as a Worksite Traffic Control Supervisor. Submit the name and qualifications, including a copy of the American Traffic Safety Services Association certification, of the Traffic Control Supervisor to the CONSTRUCTION MANAGER for approval prior to commencing construction. Provide the Traffic Control Supervisor with an up-to-date copy of Part VI of the Manual of Uniform Traffic Control Devices (and revisions thereof) and supplement to MUTCD for Traffic Control for street construction and utility work and maintenance operations available onsite.

B. Duties: The Traffic Control Supervisor duties include, but are not limited to:

1. Preparing, revising, and submitting the Traffic Control Plan and Method for Handling Traffic as required.
2. Direct supervision of project flaggers.
3. Coordinating traffic control operations, including those of subcontractors and suppliers.
4. Coordinating project activities with appropriate police and fire control agencies.
5. Maintaining a project Traffic Control Diary every day in which traffic control devices are in use, which becomes a part of the Project records.
6. Inspecting traffic control devices on every calendar day that traffic control devices are in use (by the Traffic Control Supervisor or his approved representative).
7. Insuring that traffic control devices are functioning as required.

8. Overseeing requirements covered by contract documents that contribute to the convenience, safety, and orderly movement of traffic and pedestrians.
9. At a minimum, the diary will include:
    a. Date.
    b. Time of inspection.
    c. Project number.
    d. Traffic Control Supervisor's name.
    e. Description of operations including location, setup and take down, and MHT number.
    f. Types and quantities of traffic control devices.
    g. List of personnel used along with hours.
    h. Traffic control problems and corrective action taken.

C. Working Hours: The Traffic Control Supervisor must be available on a 24-hour per day basis. Make arrangements so that the Traffic Control Supervisor, or his representative as approved by Pueblo County and CONSTRUCTION MANAGER, will be available on every calendar day and upon the request of the CONSTRUCTION MANAGER.

3.05 FLAGGERS/OFF-DUTY POLICE OFFICERS

A. Pueblo County and Lake Pueblo State Parks may require flaggers or off-duty police officers for traffic direction.

B. Qualifications:

1. Perform flagging and pilot care operation as described in the latest edition of Part VI of the MUTCD as adopted by CDOT.
    a. Traffic control personnel to wear safety apparel and hardhats meeting the requirements of the latest version of the ISEA "American National Standard for High-Visibility Safety Apparel and Headwear." Provide safety apparel labeled as meeting the standard performance by Class 2 or Class 3 risk exposure. Provide apparel and hardhat background material color to be either fluorescent orange-red or fluorescent yellow-green as defined in the standard. Provide retroreflective material either orange, yellow, white, silver, yellow-green, or a fluorescent version of these colors, and visible at a minimum distance of 1,000 feet.
    b. Illuminate night-time flagging stations with lights per Section 01 50 00, Temporary Facilities and Controls unless otherwise approved.

1) Provide flagging through the project as necessary to assure proper safety to traffic. Flagging personnel must have completed the CDOT's minimum training requirements for flaggers within 2 years prior to starting work on the project. The authorized duties of flaggers consist of directing the traveling public and the construction traffic that affects the traveling public within the Project limits.

2. If used, provide off-duty police officers that are active members of the County Sheriff's Department or City Police Department. Contact the Police Department and make arrangements for off-duty officers.

3.06 IMPLEMENTATION

A. Detours: Unless otherwise specified in the Contract Documents, provide the construction, signing, striping, maintenance, and removal of detours.

1. Setup detour signs in compliance with the MUTCD

B. Temporary Surface: Before directing vehicular traffic onto an area, install temporary surface and pavement markings or as shown on Drawings. Completely remove conflicting pavement markings by grinding before the street is opened to traffic. Maintain traffic on paved surfaces, unless approved by the CONSTRUCTION MANAGER.

1. Field verification of temporary pavement will be required. If lane shifts meet MUTCD and AASHTO Roadside Design Guide Requirements and can be accomplished within existing pavement, temporary pavement will not be required.

C. Work Limits: Do not exceed the Work Limits specified for each phase or stage of construction, unless approval to do so is granted by the CONSTRUCTION MANAGER and Pueblo County. Work beyond the limits of public right-of-way and/or easements must be approved in writing by the property owner, CONSTRUCTION MANAGER, and Pueblo County.

D. Public Notification: Provide updated information to the CONSTRUCTION MANAGER on a daily basis, and if required by the approved Traffic Control Plan, provide news release and/or public contact.

E. Work Zone Access: Construction equipment or materials are not to be in the lanes open to traffic at any time, unless directed by the CONSTRUCTION MANAGER.

1. Do not access the work areas by crossing roadways open to traffic or no-work zones. Provide suitable transportation to working site for personnel whose vehicles are parked offsite.

2. Maintain construction vehicle ingress/egress to the Work Limits along routes and in accordance with Pueblo County approved site access locations as shown on the approved Haul Route Plan. Prior to construction, submit acquired access permits to CONSTRUCTION MANAGER.

F. Working Hours: Regular working hours will be per Section 01 14 19, Use of Site, and governing jurisdiction permit requirements.

3.07 PEDESTRIAN TRAFFIC CONTROL

A. Throughout construction, maintain pedestrian walkways along both sides of public streets, where walkways currently exist, unless otherwise approved by Pueblo County, Bureau of Reclamation, and Lake Pueblo State Park. Maintain Pedestrian walkways to be a minimum of 4 feet wide and safely delineated. Provide pedestrian walkways surfaced in a manner approved by the CONSTRUCTION MANAGER and safely maintain and kept clear of debris and obstructions (including tools, equipment, and materials).

3.08 ACCESS TO ADJACENT PROPERTIES

A. Notify CONSTRUCTION MANAGER 4 working days in advance of work restricting normal access from public streets to adjacent properties. Provide information of the nature of the access restriction for each resident and/or property owner, the approximate duration of the restriction, and the best alternate access route for that particular property. CONSTRUCTION MANAGER will notify residents and/or property owners a minimum of 48 hours in advance of restricting access. Submit closure of access to or from adjacent property to the CONSTRUCTION MANAGER and Pueblo County and obtain approval prior to implementation.

B. Re-Opening to Traffic: Before reopening any portion of the public streets to vehicular traffic, restore the pavement as required by the contract documents and in accordance with Pueblo County Roadway Design and Construction Standards, and CDOT, reset signs, and restore pavement markings. If necessary, install temporary asphalt concrete surface and temporary pavement. Repair or replace signs damaged to the requirements of Pueblo County.

3.09 TEMPORARY TRAFFIC SIGNALS

A. Temporary relocation, rephasing and/or camera detection adjustment of traffic signals will be performed by Pueblo County. Notify Pueblo County at least 3 business days in advance of any temporary traffic control operation that requires temporary relocation, rephasing and/or camera detection adjustment of traffic signals and in writing at least 2 weeks prior to the beginning of construction. Pay Pueblo County for work performed by Pueblo County to relocate, rephase, or adjust camera detection of traffic signals.

B. Schedule the work in such a manner as to comply with the staging and/or phasing requirements.

3.10 SNOW REMOVAL

A. Adjust traffic control devices to allow for snow removal operations performed by others.

3.11 TEMPORARY CONCRETE BARRIER

A. When traffic is located adjacent to the work zone without adequate buffer distance or barrier curb separation, provide concrete barrier. Install concrete barriers conforming to the requirements of the AASHTO Roadside Design Guide. Fit the concrete barrier with an impact attenuation device where clear zone requirements are not met.

3.12 VEHICLE REQUIREMENTS

A. Equip construction vehicles with flashing amber lights. Equip equipment to be used at night with flashing amber lights. Provide flashing amber lights on vehicles and equipment visible from every direction.

3.13 OPEN EXCAVATIONS AND TRENCHES

A. Protect streets, roads, highways, and other pubic thoroughfares that are closed to traffic by barricades with warning signs per MUTCD.

3.14 BARRICADES AND LIGHTS

A. Provide as required by the Manual of Uniform Traffic Control Devices (MUTCD) and in sufficient quantity to safeguard public and the Work and in accordance with approved Traffic Control Plan.

B. Provide as necessary to prevent unauthorized entry to construction areas and affected roads, streets, and alleyways, inside and outside of fenced area.

C. Provide signage and lighting to alert general public of construction hazards, which include, but are not limited to, surface irregularities, unramped walkways, grade changes, and trenches or excavations in roadways and other public access areas.

D. Provide to protect existing facilities and adjacent properties from potential damage.

E. Locate to enable access by property owners.

3.15 SITE CLEANLINESS

A. Restore and clean Site in accordance with Section 02 42 00, Restoration and Clean-Up, and in accordance with the Haul Route Plan Drawings and approved SDS Haul Route Plan.

END OF SECTION

SECTION 01 55 29
STAGING AREAS

PART 1 GENERAL

1.01 STAGING AREAS, STORAGE YARDS AND BUILDINGS

A. Staging Areas, Storage Yards, and Temporary Buildings: Area shown on Drawings for staging areas, temporary storage yards, or temporary buildings for storage of products onsite. Use of other staging areas will be subject to Pueblo County's approval of a Staging Area Plan. Temporary office buildings or trailers are not permitted in staging areas.

B. Provide environmental control systems that meet recommendations of manufacturer's of equipment and materials stored.

C. Pipe stored along pipeline alignment is not considered Staging Area.

1.02 SUBMITTALS

A. Informational submittals: Staging Area Plan.

PART 2 PRODUCTS

PART 3 EXECUTION

END OF SECTION

SECTION 01 57 17
TEMPORARY WEED CONTROL

PART 1 GENERAL

1.01 GENERAL REQUIREMENTS

A. Comply with provisions of the "Colorado Noxious Weed Act" (CNWA), Title 35, Article 5.5.

B. UTILITIES will provide a person experienced in field identification of noxious weeds. Field identification will proceed in advance of ground-disturbing construction activities to physically locate and map existing noxious weeds that will be disturbed during construction. Known weed location information is provided on the Environmental Constraints Map to be provided by the CONSTRUCTION MANAGER.

PART 2 PRODUCTS

2.01 HERBICIDE

Adopt the treatment methods specified in the Pre-Construction Vegetation Resources Survey for the Southern Delivery System – S1 for the noxious weeds found within the Work Limits. A copy of the survey prepared on behalf of UTILITIES will be provided by the CONSTRUCTION MANAGER.

PART 3 EXECUTION

3.01 CONSTRUCTION

A. Adopt the following actions to prevent spread of noxious weeds during construction.

1. Pre-Construction Cleaning: Clean major equipment (track equipment, rubber tire loaders, and backhoes) with a high pressure air or water spray before entering the Site. CONSTRUCTION MANAGER will perform and document vehicle inspections.
2. Cover disturbed areas with mulch and mulch tackifier as temporary erosion control following completion of construction activities or phases of construction activities. Do not use cover crops.
3. Use certified weed-free seed, mulch, and borrow material for revegetation. Use weed-free straw bales for sediment barriers.

B. Adopt the control methods specified in the Pre-Construction Vegetation Resources Survey for the Southern Delivery System-S1 for the noxious weeds found within the Work Limits.

END OF SECTION

SECTION 01 57 19
TEMPORARY ENVIRONMENTAL CONTROLS

PART 1 GENERAL

1.01 GENERAL REQUIREMENTS

A. Participate in an Environmental Awareness Program (EAP) for CONTRACTOR and subcontractor site personnel. UTILITIES will train the following CONTRACTOR staff: Project Manager, Environmental Representative, Superintendent and up to three others who will be responsible for training other CONTRACTOR and subcontractor site personnel. UTILITIES will provide content and training materials for the EAP. The Program will address environmental and cultural/historic resource issues associated with this project. Submit sign-in sheets as proof of participation in the Program.

B. Known environmentally sensitive sites, excluding cultural resources, have been identified by UTILITIES and are shown on the Environmental Constraints Map provided by the CONSTRUCTION MANAGER. UTILITIES will update and revise the Environmental Constraints Map as additional sites are identified. Stake, flag, place barriers, schedule construction activities, etc. as defined on the Environmental Constraints Map.

C. Delays to the CONTRACTOR's critical path schedule caused by environmental constraints not shown on the Environmental Constraints Map at time of bid will be considered a differing site condition as described in General Conditions, Section 4.03, Differing Subsurface or Physical Condition.

D. CONTRACTOR-initiated changes to the approved critical path schedule may require a change in the schedule of any environmental clearance operations required by Utilities Environmental Specialist (UES). Delays or limitations of CONTRACTOR's work caused by CONTRACTOR initiated changes to the approved critical path schedule, and resulting changes in sequencing of environmental clearance activities, will not be considered a delay or cause for a change.

E. Comply with regulations pertaining to handling, storage, and transportation of hazardous materials as set forth in the Code of Federal Regulations (CFR) 1910.120, DOT, EPA and NRC regulations, as applicable. Compliance includes, but is not limited to, adhering to proper storage containers, secondary containment, access control, security, signage, labeling, placarding, transporting, manifesting, and disposal.

F. Implement a program to recognize suspected or unanticipated hazardous substances encountered during construction, and implement worker protection and public safety measures in the event that these substances are encountered in compliance with Federal, State and Local regulations prior to mobilizing onsite for Project construction. Remediation and final disposition of hazardous substances encountered during construction will be considered a differing site condition, as described in General Conditions, Section 4.03, Differing Subsurface or Physical Condition.

1.02 DEFINITIONS

A. Hazardous Substances are defined in General Conditions, Section 6.20 Hazardous Substances/Waste.

B. CONTRACTOR's Environmental Representative (ER): As described in General Conditions, Section 6.24 Environmental Representative, the ER shall be responsible for maintaining best management practices and ensuring compliance with environmental Laws and Regulations as well as environmental permit conditions. Provide an ER to be the primary liaison for environmental issues with the CONSTRUCTION MANAGER and UTILITIES' Environmental Manager (UEM).

C. CONTRACTOR's Safety Representative: As described in General Conditions, Section 6.13 Safety Representative, provide a Safety Representative to be responsible for the prevention of accidents and the maintenance and supervision of safety plans and programs.

D. UTILITIES' Environmental Manager (UEM): The UEM is the individual appointed by UTILITIES to work primarily with the ER, through the CONSTRUCTION MANAGER, when environmental policy issues arise or when there is a need to engage the services of UTILITIES' Environmental Specialist.

E. UTILITIES' Environmental Specialist (UES): The UES is under contract to UTILITIES to provide specialized environmental consultation, at the direction of the UEM.

1.03 SUBMITTALS

A. Action Submittals:

1. Environmental Constraints Plan: Include, but not be limited to, the following:
   a. Name(s), environmental experience, qualifications and contact information of ER and other person(s) within the CONTRACTOR's organization responsible for ensuring

compliance with any applicable Federal, State of Colorado, and local laws or regulations relevant to the work.

b. Description of CONTRACTOR's employees' stop work authority and procedures as they relate to environmental protection.

c. Description of the CONTRACTOR's communication protocol and procedures for coordinating with the CONSTRUCTION MANAGER and the UEM (who will in turn coordinate with the UES), to ensure ongoing compliance with environmental requirements and the identification and resolution of environmental issues as may be required during the course of the work.

d. The ER and the UEM will attend the pre-construction documentation, as required by Section 01 32 34, Photographic and Video Documentation. During the pre-construction survey, document existing environmental conditions within and adjacent to the right-of-way through construction photographs and videography.

2. Water Control Plan: Include descriptions of pollution control facilities, including measures to limit turbidity such as installation of turbidity curtains, pumping and treatment of turbid water, replacement of turbid water with clean water, equipment, methods, and discharge locations per Section 31 23 19.01, Dewatering.

3. Fugitive Dust Control Plan: Prepare, submit, and implement, prior to start of any construction activity, a plan that will include, as a minimum:

a. Watering construction areas and unpaved roads used in construction activities.

b. Limiting vehicle speeds to 30 mph onsite.

c. Covering excavated material with synthetic or natural cover or preventing sediment movement from the work areas using silt fence.

d. Installing vehicle tracking control at access points to the Site.

e. Sweeping roadways, streets, and walkways affected by the work and adjacent to the work when necessary to remove construction-related dirt and dust.

f. Additional controls as necessary to meet the requirements of Dust Control below.

4. Noise Control Plan: Prepare, submit and implement a plan to mitigate construction noise and to comply with OSHA, State of Colorado and local noise control standards, requirements, regulations and ordinances, including method of construction, equipment to be used, acoustical treatments, and work hour limitations as defined in General Conditions and as may be required in Specification sections. Include the following possible requirements, as a minimum:

a. Provide acoustical barriers so noise emanating from tools or equipment will not exceed legal noise levels as defined by local noise control ordinances.

b. Restrict access to construction areas so that the public cannot be in close proximity to loud equipment or blasting.

5. Maintenance of Construction Work Limits: Procedures and measures for protecting and preventing contamination of, and any physical intrusions into, areas that are outside of the construction work limits for the Project.
6. Sustainable Construction Plan: Prepare a Sustainable Construction Plan in accordance with Section 01 33 29, Sustainable Construction Reporting.
7. Spill Prevention, Control, and Countermeasures (SPCC) Plan: If required by 40 CFR Part 112 – Oil Pollution Prevention (for oil stored on site in combined quantities of 1,320 gallons or greater contained in storage tanks and other containers with capacities of 55 gallons or more), prepare and implement a SPCC Plan that meets the requirements of 40 CFR Part 112– Oil Pollution Prevention, including procedures, instructions, and reports to be used in the event of a spill or release of oil or a hazardous or regulated substance by the CONTRACTOR.
8. Spill Contingency Plan: If an SPCC Plan is not required, prepare and implement a general spill contingency and response plan, including procedures, instructions, and reports to be used in the event of a spill or release of oil or a hazardous or regulated substance by the CONTRACTOR.
9. Prior to commencing work in environmentally sensitive areas identified on the Environmental Constraints Map, submit a Work Area Plan. The Work Area Plan will show the proposed activities in each portion of the area, identify the areas of limited and/or prohibited use, describe the anticipated schedule for said work, and include measures for marking the construction work limits and methods for protection of features to be preserved or avoided.

B. Informational Submittals:

1. Complete the Environmental Field Log once a week and submit to the CONSTRUCTION MANAGER prior to the end of the following week. The Environmental Field Log is attached in Appendix B.
2. Complete the Material Conformance Letter indicating that no materials containing asbestos were specified and no materials containing asbestos were used for this Work. Submit the Material Conformance Letter to the CONSTRUCTION MANAGER. The Material Conformance Letter is attached in Appendix C.
3. Emission test results for construction equipment.

1.04 ENVIRONMENTAL PROTECTION REQUIREMENTS

A. Provide regulatory notification requirements in accordance with Federal, State and local regulations. In cases where UTILITIES must also provide regulatory notification, coordinate with the UEM. Submit copies of regulatory notifications to the CONSTRUCTION MANAGER prior to commencement of work activities.

B. Waters of the U.S., Including Wetlands – Best Management Practices and Construction Specifications:

1. If Water of the U.S. or wetlands are shown on the Environmental Constraints Map or identified in the field, follow the requirements of the Individual 404 Permit for the project. A copy of the Individual 404 permit and the Nationwide Permit 12 fact sheets are supplied in the Permits Supplement to be provided by the CONSTRUCTION MANAGER.
2. Install, maintain, and remove at completion of construction silt and/or construction fencing along edges of jurisdictional wetlands and Waters of the U.S. as directed by the UEM.
3. Post signs along wetland barrier fencing at 50 foot spacing that read, "This area is environmentally sensitive; no construction or other operations may occur beyond the fencing." These signs must be readable from a minimum distance of 20 feet. Maintain for the duration of construction in that area.

C. Threatened and Endangered Species and Species of Concern:

1. Take precautions necessary and prudent to protect native threatened and endangered flora and fauna in accordance with the Federal, State, and Local regulations and SDS Project permits.
2. Stake, flag, place barriers, schedule construction activities, etc. as defined on the Environmental Constraints Map. Areas known as habitats of endangered species or species of concern are identified on the Environmental Constraints Map to be provided by the CONSTRUCTION MANAGER.

D. Pre-construction vegetation resource and wildlife surveys are being conducted by UTILITIES. Comply with avoidance, protection and mitigation measures specified in the Pre-Construction Vegetation Resources Survey for the Southern Delivery System – S1 and the Pre-Construction Wildlife Survey for the Southern Delivery System – S1. A copy of these surveys prepared on behalf of UTILITIES will be provided by the CONSTRUCTION MANAGER.

1. Notify CONSTRUCTION MANAGER of construction activities that might threaten endangered species or species of concern or their habitats that are not identified on the Environmental Constraints Map in the Bidder's Library. Do not conduct construction activities in areas that threaten endangered species or species of concern or their habitats. Implement the notification procedures outlined in the Suspected Threatened and Endangered Species or Species of Concern Encountered by Construction Contractor provided in Appendix A. CONSTRUCTION MANAGER will coordinate with UEM to determine the appropriate mitigation, avoidance or temporary controls to be used. Implement the mitigation, avoidance or temporary controls as directed by the CONSTRUCTION MANAGER prior to the continuance of construction activities in the area.
2. Delays and/or limitations of CONTRACTOR's work and additional costs resulting from CONTRACTOR's inability to perform construction activities due to threats to threatened and endangered species or species of concern that are not identified on the Environmental Constraints Map shall be considered a differing site condition as described in General Conditions, Section 4.03, Differing Subsurface or Physical Condition.
3. Delays and/or limitations of CONTRACTOR's work and additional costs resulting from CONTRACTOR's inability to perform construction activities, except the specific activities as described below, within the buffer zones shown on the Environmental Constraints Map during the allowed period will not be considered a differing site condition as described in General Conditions, Section 4.03, Differing Subsurface or Physical Condition.
4. Delays and/or limitations of CONTRACTOR's work caused by CONTRACTOR-initiated changes to the approved critical path schedule will not be considered a differing site condition.

E. Cultural Resources:

1. A Class III Cultural Resource Survey has been performed by UTILITIES' and accepted by the State Historic Preservation Officer (SHPO). For work near known, protected cultural resources UTILITIES will provide a Cultural Monitor to observe construction work in the area for the duration of construction activities in this area, as necessary following an approved Treatment Plan.
2. As part of the NEPA process, UTILITIES entered into a Programmatic Agreement (PA) with Bureau of Reclamation, State Historic Preservation Officer (SHPO) and a number of tribal nations to address potential impacts to cultural resources. In the event potential cultural resources are discovered at the Site, implement the procedures as contained in the Programmatic Agreement to be provided by the CONSTRUCTION MANAGER and as shown on the Unanticipated

Historic/Cultural Resource Encountered or Disturbed by Construction Contractor workflow attached in Appendix A.

a. Delays to CONTRACTOR's critical path schedule caused by encountering cultural resources that were not made known to the CONTRACTOR at time of Bid will be considered a differing site condition, as described in Section 4.03 of the General Conditions.

PART 2 PRODUCTS (NOT USED)

PART 3 EXECUTION

3.01 ENVIRONMENTAL REPRESENTATIVE

A. Appoint an ER for the construction project. The ER will be responsible for coordinating compliance with the requirements of Federal, State of Colorado, and Local requirements, as described herein, and as required by the various permits, and by law. The ER is the primary liaison on environmental matters between CONTRACTOR and the CONSTRUCTION MANAGER. The UEM shall advise the CONSTRUCTION MANAGER regarding the need to stop work if he or she determines that an activity will cause a violation of an environmental law or regulation or permit condition.

1. The ER shall have experience with environmental controls and compliance with environmental requirements, including hazardous materials/waste management and spill prevention and response.
2. The ER shall be responsible for coordinating with UTILITIES to ensure that CONTRACTOR and subcontractor field staff receive the Environmental Awareness Program training from UTILITIES. The ER shall be responsible for arranging with UTILITIES to train and verifying that employees hired following the commencement of construction receive the same level of training as was provided prior to the start of construction.
3. The ER shall monitor the work areas for environmental concerns as identified in Article 1.04, Environmental Protection Requirements, of this Section, and advise the CONSTRUCTION MANAGER and UEM of culturally, historically, or environmentally sensitive sites.
4. The ER shall be responsible for ensuring compliance with the information and plans identified in Article 1.03, Submittals, of this Section.
5. The ER shall be responsible for ensuring compliance with conditions of the permits identified in Section 01 41 26, Permits.
6. The ER is responsible for completing the Environmental Field Log and submitting to CONSTRUCTION MANAGER.

3.02 ENVIRONMENTAL AWARENESS TRAINING PROGRAM

A. Conduct an Environmental Awareness Training Program for CONTRACTOR's, subcontractors' and suppliers' site employees based on UTILITIES provided content and materials.

B. Maintain originals of sign-in sheets of attendees as proof of participation in program.

3.03 ACCESS

A. Access and Transportation Restrictions to the Site: In accordance with Section 01 14 13, Access to Site.

B. Access and Transportation Restrictions On-Site: Restrict access within the Site within the construction work limits identified on the Drawings. Do not permit driving across or transporting equipment or materials across areas outside of the construction work limits on the Drawings. Verify proposed access routes with the CONSTRUCTION MANAGER and UEM at least 30 days prior to the commencement of Work.

3.04 TEMPORARY FENCING

A. Follow the requirements of Section 32 31 26, Wire Fences and Gates.

3.05 DUST CONTROL

A. Obtain Colorado Department of Public Health and Environment's Air Pollution Emission Notice (APEN) and Land Development General Construction Permit.

B. Comply with dust control requirements in the Colorado Department of Public Health and Environment's Air Pollution Emission Notice (APEN) and Land Development General Construction Permit and the Fugitive Dust Control Plan as specified in Paragraph 1.03.A.3 of this Section.

C. Conduct operations of dumping rock or soil and of carrying rock or soil away in trucks to cause a minimum of dust. Cover loads of rock or soil to cause a minimum of dust. Give unpaved streets, roads, detours, or haul roads used in construction area a dust-preventive treatment, as site conditions allow, or periodically water to prevent dust. Strictly adhere to applicable environmental regulations for dust prevention. Other controls may be used as necessary and approved by the CONSTRUCTION MANAGER.

D. Control fugitive dust emissions resulting from work activities and/or wind using the best available control technology, as defined by the Colorado Department of Public Health and Environment, at the time of work. During grading, applying a combination of water, tackifier and silt fence to break up wind surface velocities may control dust. If wind speeds exceed the ability of BMPs to control fugitive dust, work activities must cease.

E. UTILITIES will perform particulate monitoring.

1. Particulate monitors will be real time that are capable of monitoring particulate matter less than 10 microns (PM10).
2. Particulate levels will be monitored immediately downwind at the working site and integrated over a period not to exceed 15 minutes.
3. Monitoring will be conducted a minimum of once a day, with additional testing conducted if complaints are received.
4. Meet the action levels.
   a. The action level is 150 micrograms per cubic meter over the integrated period not to exceed 15 minutes. If particulate levels are detected in excess of 150 micrograms per cubic meter, the upwind background level will be measured immediately using the same portable meter.
   b. If the working site particulate measurement is greater than 100 micrograms per cubic meter above the background level, implement additional dust suppression techniques to reduce the generation of fugitive dust.

3.06 EROSION AND SEDIMENT CONTROL

A. Follow the requirements of Section 01 57 22, Temporary Stormwater Pollution, Erosion and Sediment Control.

3.07 DEWATERING

A. Follow the requirements of Section 31 23 19.01, Dewatering.

B. Dewatering Sediment Control: Contain sediment within the construction site and do not discharge into drainages and/ or jurisdictional waters. Dispose of contained sediment at a designated location away from the Site. Filter water from dewatering so that sediment plumes are not deposited into drainages or wetlands.

1. Obtain a CDPHE Construction Dewatering Discharge Permit. Develop a water control plan per Section 31 23 19.01, Dewatering, prior to the start of any dewatering work on the Site.
2. If any sediment is deposited into Waters of the U.S. or wetlands, immediately contact the CONSTRUCTION MANAGER and UEM and stop Work until the sediment leak is repaired.

3.08 RUBBISH CONTROL

A. During the progress of the work, keep the Site in a neat and clean condition and free from accumulation of rubbish. Dispose of rubbish and waste materials and establish regular intervals of collection and disposal of such materials and waste in accordance with Section 01 74 13, Progress Cleaning.

B. Keep haul roads free from dirt, rubbish, and unnecessary obstructions resulting from CONTRACTOR operations. Dispose of rubbish and surplus materials off the Site in accordance with local codes and ordinances governing locations and methods of disposal and in conformance with applicable safety laws and the particular requirements of Part 1926 of the OSHA Safety and Health Standards for Construction.

3.09 CHEMICALS

A. Show approval of chemicals used on the work or furnished for the facility operation, whether defoliant, soil sterilant, herbicide, pesticide, disinfectant, polymer, reactant, or of other classification, of either the U.S. Environmental Protection Agency or the U.S. Department of Agriculture. Use of such chemicals and disposal of residues shall be in accordance with the printed instructions of the manufacturer. In addition, see the requirements set forth in General Conditions, Section 6.10, Use of Site and Other Areas.

3.10 AIR POLLUTION CONTROL

A. Minimize air pollution from construction operations.

B. Ensure construction equipment has a passing emission test for Colorado opacity standards from an approved facility prior to use on the Site. Retest equipment used on the project on an annual basis for each year the equipment is used on the project. Submit certificates for each item of construction equipment to the CONSTRUCTION MANAGER.

C. Burning of waste materials, rubbish, or other debris will not be permitted on or adjacent to Site.

D. Use Best Available Control Technology on construction equipment, including a timing retardation.

3.11 NOISE CONTROL

A. Comply with OSHA, State of Colorado, and local noise control standards, requirements, and regulations.

B. Implement the Noise Control Plan.

C. Requirements of the Noise Control Plan shall be implemented and managed by the CONTRACTOR's Safety Representative. Report results of required noise monitoring in the daily reports.

D. Noise Control Plan: Submit a detailed plan to mitigate construction noise and to comply with OSHA, State of Colorado and local noise control standards, requirements, regulations, and ordinances, including method of construction, equipment to be used, acoustical treatments, and work hour limitations as defined in General Conditions and as may be specified in Specification sections. Include the following requirements as a minimum:

1. Provide acoustical barriers to noise emanating from tools or equipment so that legal noise levels are not exceeded as defined by local noise control ordinances.
2. Restrict access to construction areas so that the public cannot be in close proximity to loud equipment or blasting.
3. UTILITIES will measure baseline noise conditions prior to commencing construction work. The baseline shall be the average noise reading over three 24-hour periods at each receptor lot-line location or at 1-mile intervals, whichever is greater.
4. UTILITIES will periodically monitor generated sound levels and record decibel levels. If noise levels exceed appropriate standards, cease construction operations and implement additional noise mitigation measures as required to comply with appropriate standards.
5. Perform excessively high decibel level work, characterized as a decibel scale of 100 or greater measure at 25 feet from the source, only between the hours of 9:00 a.m. and 5:00 p.m., Monday through Friday.

E. Comply with work hour restrictions as specified in Section 01 14 19, Use of Site.

3.12 ARCHAEOLOGICAL/PALEONTOLOGICAL – UNANTICIPATED DISCOVERIES

A. General: If discoveries of an archaeological or paleontological nature are identified within the contract limits of the Site, immediately notify CONSTRUCTION MANAGER and stop work in the area. Proceed in accordance with the General Conditions, the Unanticipated Historic/Cultural Resource Encountered or Disturbed by Construction Contractor, as provided in Appendix A and the Programmatic Agreement to be provided by CONSTRUCTION MANAGER.

B. Archaeological Discoveries: Evidence of human occupation or use of an area within the contract limits. Evidence may consist of skeletons, stone, or other utensils, or evidence of habitations or structures.

C. Paleontological Discoveries: Evidence of prehistoric plant or animal life, such as skeletons, bones, fossils, or casts, and other indications such as pictographs.

D. UTILITIES or CONSTRUCTION MANAGER may order the Work stopped in other areas if, in UTILITIES or CONSTRUCTION MANAGER's opinion, the find is significant.

E. Protection of Artifacts:

1. Cover, fence, or otherwise protect Site until notice to resume Work is given.
2. Cover the discovery with plastic film held in place by earth, rocks, or other weights placed outside the find. If additional backfilling is necessary for safety or to prevent caving, place backfill material loosely over the plastic film.
3. Sheet or shore as necessary to protect excavations underway. Place temporary fence as approved by CONSTRUCTION MANAGER to prevent unauthorized access.

F. Removal of Artifacts: Finds are property of property owner. Do not remove or disturb finds without UTILITIES' written authorization.

3.13 SUPPLEMENTS

A. The supplements listed below, following "End of Section," are part of this Specification.

1. Appendix A, Southern Delivery System Workflows:
   a. Hazardous Substance Encountered by Construction Contractor.
   b. Suspected Threatened or Endangered Species or Species of Concern Encountered by Construction Contractor.
   c. Unanticipated Historic/Cultural Resource Encountered or Disturbed by Contractor.
2. Appendix B, Environmental Field Log.
3. Appendix C, Material Conformance Letter.

END OF SECTION

APPENDIX A

SOUTHERN DELIVERY SYSTEM WORKFLOWS

TABLE OF CONTENTS

Colorado Springs Utilities
It's how we're all connected

Hazardous Substance Encountered by Construction Contractor

SDS Southern Delivery System

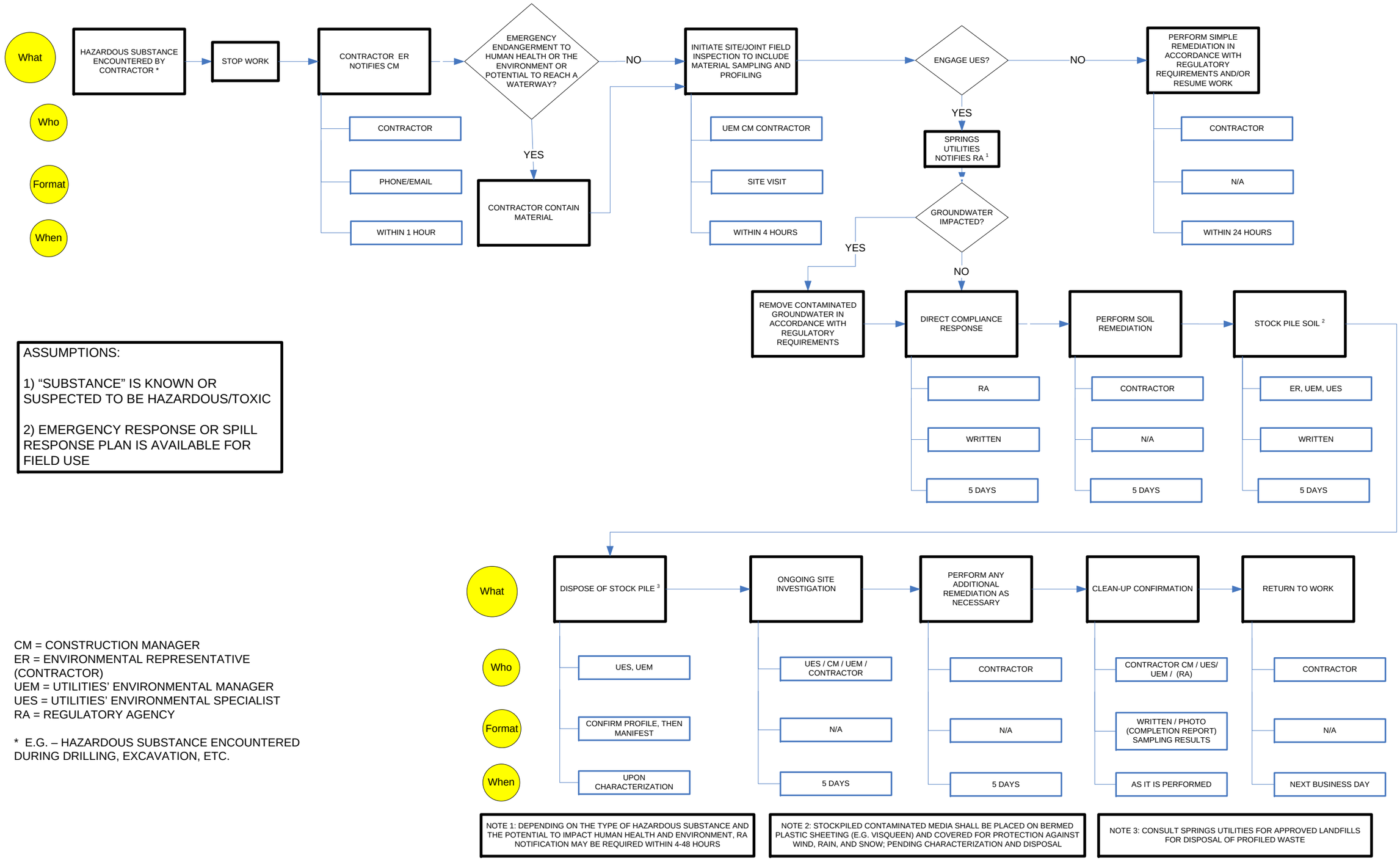

ASSUMPTIONS:

1) "SUBSTANCE" IS KNOWN OR SUSPECTED TO BE HAZARDOUS/TOXIC

2) EMERGENCY RESPONSE OR SPILL RESPONSE PLAN IS AVAILABLE FOR FIELD USE

CM = CONSTRUCTION MANAGER
ER = ENVIRONMENTAL REPRESENTATIVE (CONTRACTOR)
UEM = UTILITIES' ENVIRONMENTAL MANAGER
UES = UTILITIES' ENVIRONMENTAL SPECIALIST
RA = REGULATORY AGENCY

* E.G. – HAZARDOUS SUBSTANCE ENCOUNTERED DURING DRILLING, EXCAVATION, ETC.

NOTE 1: DEPENDING ON THE TYPE OF HAZARDOUS SUBSTANCE AND THE POTENTIAL TO IMPACT HUMAN HEALTH AND ENVIRONMENT, RA NOTIFICATION MAY BE REQUIRED WITHIN 4-48 HOURS

NOTE 2: STOCKPILED CONTAMINATED MEDIA SHALL BE PLACED ON BERMED PLASTIC SHEETING (E.G. VISQUEEN) AND COVERED FOR PROTECTION AGAINST WIND, RAIN, AND SNOW; PENDING CHARACTERIZATION AND DISPOSAL

NOTE 3: CONSULT SPRINGS UTILITIES FOR APPROVED LANDFILLS FOR DISPOSAL OF PROFILED WASTE

Revised 10/7/2010

Colorado Springs Utilities
It's how we're all connected

Suspected Threatened and Endangered Species or Species of Concern Encountered by Construction Contractor

SDS Southern Delivery System

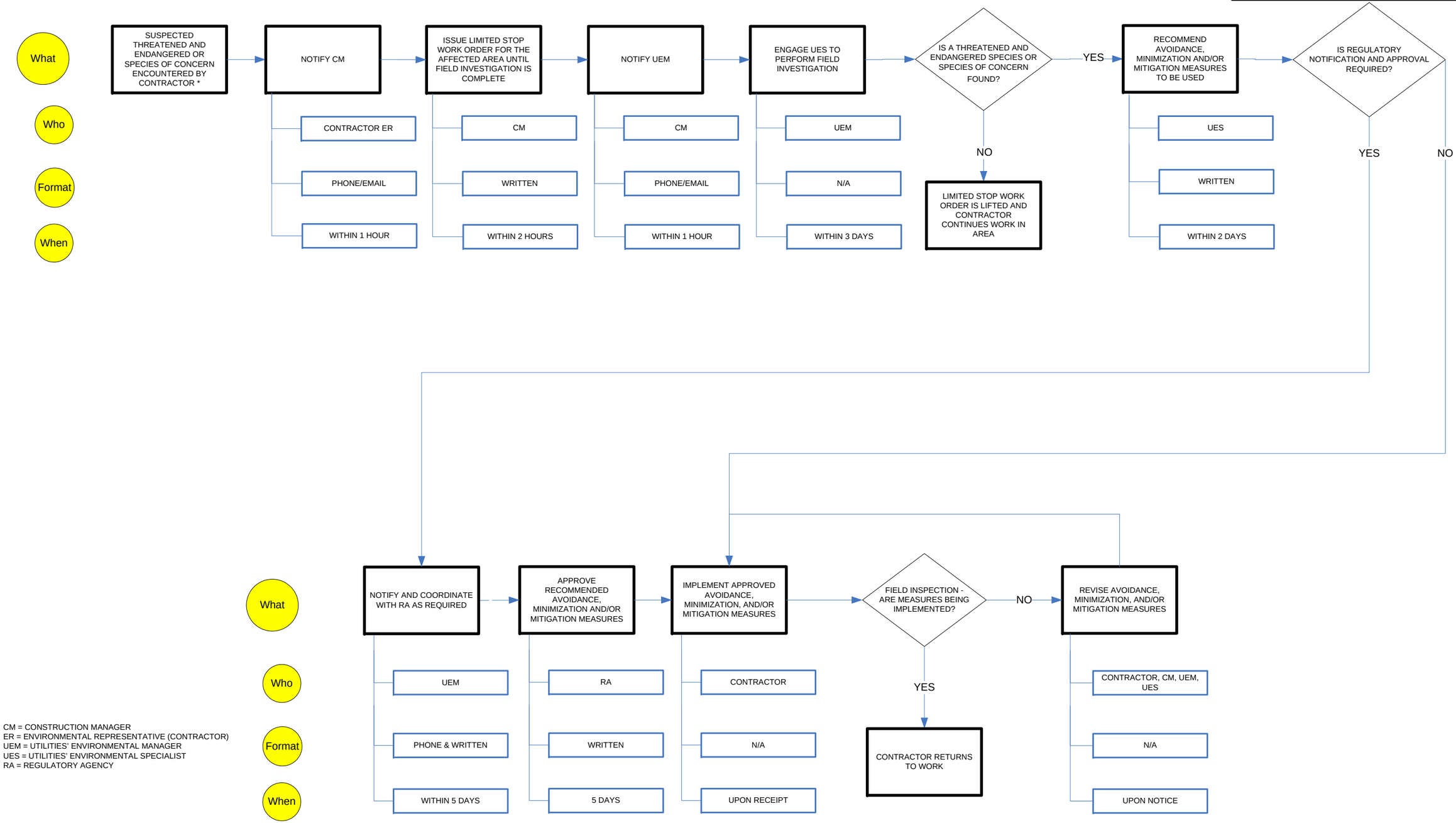

CM = CONSTRUCTION MANAGER
ER = ENVIRONMENTAL REPRESENTATIVE (CONTRACTOR)
UEM = UTILITIES' ENVIRONMENTAL MANAGER
UES = UTILITIES' ENVIRONMENTAL SPECIALIST
RA = REGULATORY AGENCY

Revised 10/7/2010

Unanticipated Historic/Cultural Resource Encountered or Disturbed by Construction Contractor

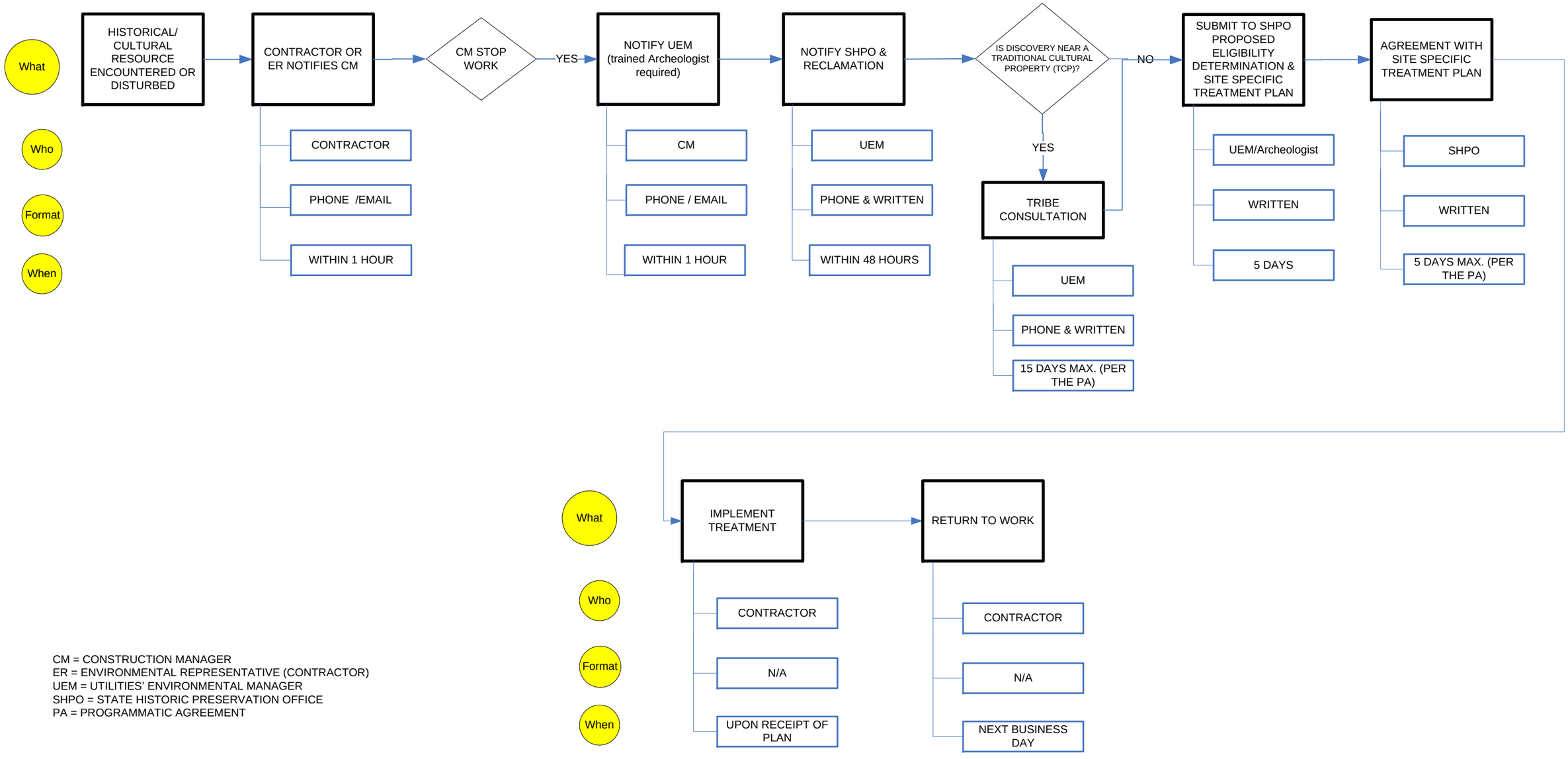

CM = CONSTRUCTION MANAGER
ER = ENVIRONMENTAL REPRESENTATIVE (CONTRACTOR)
UEM = UTILITIES' ENVIRONMENTAL MANAGER
SHPO = STATE HISTORIC PRESERVATION OFFICE
PA = PROGRAMMATIC AGREEMENT

Revised 10/7/2010

APPENDIX B

ENVIRONMENTAL FIELD LOG

SOUTHERN DELIVERY SYSTEM

PERMIT/ENVIRONMENTAL FIELD LOG

SOUTH 1 (S1) RAW WATER PIPELINE

	Requirement	Contractor Response	Contractor Submittal		CM Team		Upload to EMS by Enviro. Team	
			Date	Initials	Date	Initials	Date	Initials
1.0	RECORDKEEPING (see attached permits for recordkeeping requirements)							
1.A	Is all documentation stored or displayed on-site per the requirements of any of the permits?	N/A YES NO	N/A	N/A	N/A	N/A	N/A	N/A
1.B	Have copies of all permits received been submitted to the Construction Manager (CM)?	N/A YES NO						
1.C	Issues, Complaints or Highlights to report:							
2.0	STORMWATER							
2.A	CDPHE: CDPS General Permit for Discharges from Construction Stormwater							
2.A.i	Is there a Stormwater Management Plan (SWMP) on-site?	N/A YES NO	N/A	N/A	N/A	N/A	N/A	N/A
2.A.ii	Are BMPs being implemented and maintained per the SWMP?	N/A YES NO	N/A	N/A	N/A	N/A	N/A	N/A
2.A.iii	Is the SWMP being amended when required?	N/A YES NO	N/A	N/A	N/A	N/A	N/A	N/A
2.A.iv	Date of Last Inspection:		N/A	N/A	N/A	N/A	N/A	N/A
2.A.v	Inspection Type: (circle one) 14-day Precip. Event 30-day		N/A	N/A	N/A	N/A	N/A	N/A
2.A.vi	Copy of inspection report presented to the Construction Manager?	N/A YES NO	N/A	N/A	N/A	N/A	N/A	N/A
2.A.vii	Date Inspection Findings Resolved:		N/A	N/A	N/A	N/A	N/A	N/A
2.B	Issues, Complaints or Highlights to report:							
3.0	AIR QUALITY							
3.A	CDPHE: APEN							
3.A.i	Are the appropriate control measures being implemented to meet the emissions guidelines?	N/A YES NO	N/A	N/A	N/A	N/A	N/A	N/A

Requirement	Contractor Response	Contractor Submittal		CM Team		Upload to EMS by Enviro. Team	
		Date	Initials	Date	Initials	Date	Initials
3.A.ii Description of dust control measures utilized this week:		N/A	N/A	N/A	N/A	N/A	N/A
3.B Pueblo County: 1041 Permit							
3.B.i Was particulate monitoring performed every day this week?	N/A	N/A	N/A	N/A NO YES		N/A	N/A
3.B.ii Were any air quality complaints received? *(fill in fields below, use additional sheets as needed)*	N/A NO YES	N/A	N/A	N/A	N/A	N/A	N/A
3.B.iii Were any additional measures taken to improve air quality? *(Describe additional measures taken here)*		N/A	N/A	N/A	N/A	N/A	N/A
3.C Issues, Complaints or Highlights to report:							
4.0 NOISE							
4.A Pueblo County: 1041 Permit							
4.A.i Are operations compliant with the Pueblo County Noise Ordinance as measured by noise monitoring equipment?	N/A YES NO	N/A	N/A	N/A	N/A	N/A	N/A
4.A.ii Was any excessively high decibel work performed outside of the hours of 9:00 am and 5 pm? (fill in fields below, use additional sheets as needed)	N/A YES NO	N/A	N/A	N/A	N/A	N/A	N/A

Complaint description	Date of Complaint	Resolution

Description of work	Notifications Provided	Rationale

Requirement	Contractor Response	Contractor Submittal		CM Team		Upload to EMS by Enviro. Team	
		Date	Initials	Date	Initials	Date	Initials
4.A.iii Is periodic construction noise monitoring being completed?	*N/A YES NO*	*N/A*	*N/A*	*N/A*	*N/A*	*N/A*	*N/A*
4.A.iv Is the noise level being documented? (List where documentation is being stored.)	*N/A YES NO*	*N/A*	*N/A*	*N/A*	*N/A*	*N/A*	*N/A*
4.A.v Were there any noise complaints?	N/A NO YES						

Complaint description	Date of Complaint	Resolution

4.B	Issues, Complaints or Highlights to report:							
5.0	NON-STORMWATER DISCHARGES							
5.A	CDPHE: CDPS General Permit for Discharges from Construction Dewatering							
5.A.i	Were there any construction dewatering discharges this week?	N/A NO YES	N/A	N/A	N/A	N/A	N/A	N/A
5.A.ii	Describe the location and extent of dewatering activities this week							
5.A.iii	Was the water quality monitoring specified in the permit completed at each discharge point?	N/A YES NO	N/A	N/A	N/A	N/A	N/A	N/A
5.A.iv	Date of last DMR submittal to CDPHE:		N/A	N/A	N/A	N/A	N/A	N/A
5.A.v	Copy of DMR submitted to the Construction Manager?	N/A YES NO						
5.B	CDPHE: CDPS General Permit for Discharges Associated with Hydrostatic Testing of Pipelines, Tanks and Similar Vessels							
5.B.i	Were there any discharges related to hydrostatic testing this week?	N/A NO YES	N/A	N/A	N/A	N/A	N/A	N/A
5.B.ii	Was the water quality monitoring specified in the permit completed at each discharge point?	N/A YES NO	N/A	N/A	N/A	N/A	N/A	N/A
5.B.iii	Date of last DMR submittal to CDPHE:		N/A	N/A	N/A	N/A	N/A	N/A

Requirement	Contractor Response	Contractor Submittal		CM Team		Upload to EMS by Enviro. Team	
		Date	Initials	Date	Initials	Date	Initials
5.B.iv Copy of DMR submitted to the Construction Manager?	N/A YES NO						
5.C Issues, Complaints or Highlights to report:							
6.0 WORK AROUND UNNAMED DRAINAGE (N. of E. Spaulding Ave.)							
6.A U.S. Army Corps of Engineers: 404 Permit (see Supplement for list of requirements)							
6.A.i Was work completed in jurisdictional wetlands or Waters of the U.S.?	N/A NO YES	N/A	N/A	N/A	N/A	N/A	N/A
6.A.ii Name of crossing location:		N/A	N/A	N/A	N/A	N/A	N/A
6.A.iii Were the Nationwide Permit (NWP) 12 conditions incorporated in the work plan and complied with during construction?	N/A YES NO	N/A	N/A	N/A	N/A	N/A	N/A
6.A.iv Date(s) of Construction Activity:		Date(s) of Restoration:					
7.0 PUEBLO COUNTY PERMITS							
7.A 1041 Permit							
7.A.i Did any work occur outside the hours of 7AM and 6PM Monday through Saturday? *(fill in fields below, use additional sheets as needed)*	N/A NO YES	N/A	N/A	N/A	N/A	N/A	N/A
Description of work / Notifications Provided / Rationale							
7.A.ii Description of sustainable construction measures utilized this week *(use additional sheets as needed)* :		N/A	N/A	N/A	N/A	N/A	N/A
7.A.iii Description of site maintenance, security and access control to properties utilized this week:		N/A	N/A	N/A	N/A	N/A	N/A

	Requirement	Contractor Response	Contractor Submittal		CM Team		Upload to EMS by Enviro. Team	
			Date	Initials	Date	Initials	Date	Initials
7.B	Pueblo County ROW Excavation & Roadway Access Permits (Assumed from CDOT inspection/notification requirements)							
7.B.i	Was work completed within Pueblo West Metro District this week? If yes, complete fields below:	N/A NO YES	N/A	N/A	N/A	N/A	N/A	N/A
7.B.i.a	Date Pueblo West Metro District notified:	Date(s) of Construction Activity:			Date(s) of Restoration:			
7.B.ii	Were there any inspections by a Pueblo West Metro District Inspector this week? If yes, complete fields below:	N/A NO YES	N/A	N/A	N/A	N/A	N/A	N/A
7.B.ii.a	Date of Last Inspection:	Date Inspection Findings Resolved:						
7.B.ii.b	Copy of inspection report presented to the Construction Manager?	N/A NO YES	N/A	N/A	N/A	N/A	N/A	N/A
7.C	Issues, Complaints or Highlights to report:							
8.0	COLORADO STATE PARKS							
8.A	Memorandum of Understanding							
8.A.i	Was work completed within Lake Pueblo State Park this week?	N/A NO YES	N/A	N/A	N/A	N/A	N/A	N/A
8.A.ii	When was the issued vehicle permits information last transmitted to the Construction Manager?	Date:						
8.A.iii	Were the access requirements stipulated in the agreement complied with this week?	N/A NO YES	N/A	N/A	N/A	N/A	N/A	N/A
8.B	Issues, Complaints or Highlights to report:							
9.0	BUREAU OF RECLAMATION							
9.A	Record of Decision (ROD) Requriements							
9.A.i	Are baffles installed on construction lighting fixtures to direct light onto the construction activity only?	N/A NO YES	N/A	N/A	N/A	N/A	N/A	N/A
9.A.ii	Are traffic signage and traffic control measures in place per traffic control plan?	N/A NO YES	N/A	N/A	N/A	N/A	N/A	N/A

	Requirement	Contractor Response	Contractor Submittal		CM Team		Upload to EMS by Enviro. Team	
			Date	Initials	Date	Initials	Date	Initials
9.B	Issues, Complaints or Highlights to report:							
10.0	OTHER PERMITS (NO INSPECTION, REPORTING OR OTHER COMPLIANCE MONITORING REQUIREMENTS)							
Were the provisions of the following permits or agreements complied with during this week?								
10.A	Bureau of Reclamation Fountain Valley Pipeline Easement Letter of Consent Agreement (In process)	YES NO N/A	N/A	N/A	N/A	N/A	N/A	N/A
10.B	Bureau of Reclamation 299/Special Use Permit (In process)	YES NO N/A	N/A	N/A	N/A	N/A	N/A	N/A
10.C	Bureau of Reclamation Special Work Permit	YES NO N/A	N/A	N/A	N/A	N/A	N/A	N/A
10.D	CDOT Transport Permit	YES NO N/A	N/A	N/A	N/A	N/A	N/A	N/A
10.E	CDPHE Asbestos Abatement (if necessary)	YES NO N/A	N/A	N/A	N/A	N/A	N/A	N/A
10.F	CDPHE Demolition Permit (if necessary)	YES NO N/A	N/A	N/A	N/A	N/A	N/A	N/A
10.G	Colorado Division of Water Resources Notice of Intent (de-watering)	YES NO N/A	N/A	N/A	N/A	N/A	N/A	N/A
10.H	Pueblo County Health Department Demolition Permit (if required)	YES NO N/A	N/A	N/A	N/A	N/A	N/A	N/A
10.I	Pueblo County Traffic Control Plan	YES NO N/A	N/A	N/A	N/A	N/A	N/A	N/A
10.J	Pueblo County Staging Area Plan	YES NO N/A	N/A	N/A	N/A	N/A	N/A	N/A
10.K	Pueblo County Haul Route Plan	YES NO N/A	N/A	N/A	N/A	N/A	N/A	N/A
10.L	Pueblo Regional Building Department Building Permit (if required)	YES NO N/A	N/A	N/A	N/A	N/A	N/A	N/A
10.M	Union Pacific RR Pipeline License Agreement	YES NO N/A	N/A	N/A	N/A	N/A	N/A	N/A
10.N	Union Pacific RR Wireline License Agreement	YES NO N/A	N/A	N/A	N/A	N/A	N/A	N/A
10.O	Union Pacific Right-of-Entry Agreement	YES NO N/A	N/A	N/A	N/A	N/A	N/A	N/A
10.P	Issues, Complaints or Highlights to report:							

	Requirement	Contractor Response	Contractor Submittal		CM Team		Upload to EMS by Enviro. Team	
			Date	Initials	Date	Initials	Date	Initials
11.0	ENVIRONMENTAL COMPLIANCE: WILDLIFE AND VEGETATION							
11.A	Were construction activities occurring in areas inhabited by species of concern or threatened and endangered species?	N/A NO YES	N/A	N/A	N/A	N/A	N/A	N/A
11.B	Was the Construction Manager notified of this activity?	N/A YES NO	N/A	N/A	N/A	N/A	N/A	N/A
11.C	Were mitigation or habitat protection methods utilized?	N/A YES NO	N/A	N/A	N/A	N/A	N/A	N/A
11.C.i	Describe mitigation or protection methods and date(s) utilized:		N/A	N/A	N/A	N/A	N/A	N/A
11.D	Issues, Complaints or Highlights to report:							
12.0	ENVIRONMENTAL COMPLIANCE: WEED CONTROL							
12.A	Were construction activities occurring in areas infested with listed noxious	N/A NO YES	N/A	N/A	N/A	N/A	N/A	N/A
12.B	Was the Construction Manager notified of this activity?	N/A YES NO	N/A	N/A	N/A	N/A	N/A	N/A
12.C	Were weed control, treatment or eradication measures implemented per the approved Noxious Weed Control Plan?	N/A YES NO	N/A	N/A	N/A	N/A	N/A	N/A
12.C.i	Describe weed control, treatment or eradication measures and date(s) utilized:		N/A	N/A	N/A	N/A	N/A	N/A
12.D	Issues, Complaints or Highlights to report:							
13.0	ENVIRONMENTAL COMPLIANCE: CULTURAL RESOURCES							
13.A	Is construction occurring in areas with known cultural resources?	N/A NO YES	N/A	N/A	N/A	N/A	N/A	N/A
13.B	Was the Construction Manager notified of this activity?	N/A YES NO	N/A	N/A	N/A	N/A	N/A	N/A
13.B.i	Describe mitigation used and date(s) needed:		N/A	N/A	N/A	N/A	N/A	N/A
13.C	Were any previously unknown cultural resources discovered?	N/A NO YES	N/A	N/A	N/A	N/A	N/A	N/A
13.D	Was the Construction Manager notified of this activity?	N/A YES NO	N/A	N/A	N/A	N/A	N/A	N/A

	Requirement	Contractor Response	Contractor Submittal		CM Team		Upload to EMS by Enviro. Team	
			Date	Initials	Date	Initials	Date	Initials
13.D.i	Describe discovery including location, date, notifications provided and protections implemented:		N/A	N/A	N/A	N/A	N/A	N/A
13.E	Issues, Complaints or Highlights to report:							
14.0	ENVIRONMENTAL COMPLIANCE: HAZARDOUS WASTE MANAGEMENT (ROD and 1041 Permit Requirement)							
14.A	Were there construction activities that resulted in the generation of hazardous waste this week?	N/A NO YES	N/A	N/A	N/A	N/A	N/A	N/A
14.A.i	Was the Construction Manager notified of this activity?	N/A YES NO	N/A	N/A	N/A	N/A	N/A	N/A
14.B	Were handling, storage, transportation, and disposal of hazardous materials measures implemented per the approved Health, Safety and Environmental Plans?	N/A YES NO	N/A	N/A	N/A	N/A	N/A	N/A
14.C	Describe handling, storage, transportation, and disposal measures and date(s) utilized:		N/A	N/A	N/A	N/A	N/A	N/A
14.D	Issues, Complaints or Highlights to report:							
15.0	ENVIRONMENTAL COMPLIANCE: PROTECTION OF LIVESTOCK (1041 Permit Requirement)							
15.A	Were there construction activities near livestock this week?	N/A NO YES	N/A	N/A	N/A	N/A	N/A	N/A
15.B	Was the Construction Manager notified of this activity?	N/A YES NO	N/A	N/A	N/A	N/A	N/A	N/A
15.B.i	Describe livestock protection measures and date(s) utilized:		N/A	N/A	N/A	N/A	N/A	N/A
15.C	Issues, Complaints or Highlights to report:							

APPENDIX C

MATERIAL CONFORMANCE LETTER

TABLE OF CONTENTS

MATERIAL CONFORMANCE LETTER

Date:_____

To Whom It May Concern:

As a representative of_____
Contractor's Firm Name

I certify that to the best of my knowledge, no materials containing asbestos were specified and no materials containing asbestos were used in

_____
Name of Project

_____
Address of Project

_____
Signature

_____
Name

_____
Title

_____

_____
Address

Notary:

_____

_____

SECTION 01 57 22
TEMPORARY STORMWATER POLLUTION, EROSION, AND SEDIMENT CONTROL

PART 1 GENERAL

1.01 WORK OF THIS SECTION

A. This section covers measures necessary for the control of stormwater erosion and sediment pollution due to construction activities.

B. This section covers work necessary for temporary stabilization of soil to control erosion during and after construction and land disturbing activities. This work includes furnishing of labor, materials, tools, and equipment to perform the work and services necessary as herein specified and as indicated on the Drawings. This work includes installation, maintenance, and final removal of temporary soil erosion and sediment control measures as appropriate.

C. The minimum areas requiring soil erosion and sediment control measures are indicated on the Drawings. CONSTRUCTION MANAGER reserves the right to modify the use, location, and quantities of soil erosion and sediment control measures based on activities of the CONTRACTOR and as the CONSTRUCTION MANAGER considers to be in the best interest of UTILITIES.

D. See additional information noted on the Drawings and permits.

1.02 SUBMITTALS

A. Informational Submittals:

1. Certificates of inspection of seed by state or federal authorities.
2. Certificates of weed-free mulch.
3. Manufacturer's certificate of compliance attesting that erosion and sediment control products meet requirements of these Specifications.

1.03 GENERAL

A. Maintain the Stormwater Management Plan (SWMP) booklet onsite at all times. The SWMP booklet shall contain the following:

1. The SWMP prepared by UTILITIES.
2. A copy of the Colorado Discharge Permit System (CDPS) Construction Stormwater Discharge permit certification.
3. Copies of inspection records.

4. Sign-in sheets for training provided.
5. Qualifications of the site inspectors.

B. Provide qualified individuals to conduct site inspections to the satisfaction of the CONSTRUCTION MANAGER.

C. Provide material, labor, equipment and services required to implement, maintain and monitor erosion and sedimentation controls in compliance with the SWMP and implemented Best Management Practices (BMPs). Controls implemented shall comply with State and Local regulations. These controls shall remain in operation until project completion and permanent stabilization of the site is achieved.

D. Soil erosion stabilization and sedimentation control consist of the following elements:

1. Maintenance of existing permanent or temporary piping and channel systems, as necessary.
2. Construction of new permanent and temporary piping and channel systems, as necessary.
3. Construction of temporary erosion control facilities such as silt fences, check dams, etc.
4. Application of mulch and tackifier.

E. Place erosion control measures after temporary work limit fencing has been installed.

F. Phase Work, including proposed stockpile areas, to restrict sediment transport. This will include installation of required temporary erosion control devices, ditches, or other facilities.

G. The areas identified for the CONTRACTOR's use during the Project may be temporarily developed to provide satisfactory working, staging, and administrative areas. Prepare these areas in accordance with other requirements contained within these Specifications and in a manner to prevent sediment transport away from the area.

H. Prevent the transport of sediment away from the stockpile by installing silt fences, erosion bales, earthen berms, or similar measures that completely surround the stockpiles and are located within 10 feet of the toes of the stockpile slopes. Keep these temporary facilities in operational condition by regular cleaning, regrading, and maintenance. Stockpiles remaining in place longer than 14 days will be considered permanent stockpiles for purposes of erosion and sediment control. Stabilize by mulching within 14 days of the construction of the stockpile.

I. Maintain erosion and sediment control measures in functional conditions for the duration of this Project. Conduct formal inspections every 2 weeks and immediately after a storm event to evaluate conformance to the requirements of these Specifications. Include results of these inspections, and a summary of corrective actions, in the daily reports. Additional inspections may be conducted by the CONSTRUCTION MANAGER. Take measures within 24 hours of the inspection to repair or replace any damaged areas found during the inspection. Inspection forms shall be kept on site with the SWMP.

J. Replace or repair failed or overloaded (defined as 50 percent of sediment capture capacity) silt fences, check dams, or other temporary erosion control devices as needed, but not later than 24 hours after receiving written notice from the CONSTRUCTION MANAGER.

K. Prepare, submit and implement a fugitive dust control plan per Section 01 57 19, Temporary Environmental Controls.

L. If compliance with any required erosion and sediment efforts to the satisfaction of the CONSTRUCTION MANAGER has not occurred within 24 hours after receiving written notification from the CONSTRUCTION MANAGER, CONSTRUCTION MANAGER will have the prerogative of engaging others to perform any needed maintenance or cleanup, including removal of accumulated sediment at constructed erosion control facilities, and deduct from the CONTRACTOR's monthly partial payment the costs for such efforts plus a $500 administration fee.

1.04 QUALITY ASSURANCE

A. Implement all permanent and temporary Site controls according to State and Local regulatory requirements.

B. Inspect all BMPs at regular intervals as specified in the SWMP for this project. Use standard inspection forms for each inspection. Record deficiencies of site controls, and take immediate action to correct deficiencies recorded. Keep records of inspections current and on site, available for review.

PART 2 PRODUCTS

2.01 STRAW MULCH

A. Use only 100 percent certified weed free mulch. Locally or regionally produced mulch shall be used when practicable.

B. Threshed straw of oats, wheat, barley, or rye, free from seed of noxious weeds, or clean salt hay.

C. Average Stalk Length: 6 inches with at least half the material being 10 inches or longer. Do not use fine materials.

D. Seasoned before baling or loading.

2.02 WOOD CELLULOSE FIBER MULCH

A. Use only 100 percent certified weed free mulch. Locally or regionally produced mulch shall be used when practicable.

B. Material:

1. Specially processed wood fiber containing no growth or germination inhibiting factors.
2. Dyed a suitable color to facilitate inspection of material placement.
3. Manufactured such that after addition and agitation in slurry tanks with water, the material fibers will become uniformly suspended to form homogeneous slurry.
4. When hydraulically sprayed on ground, material will allow absorption and percolation of moisture.

2.03 TACKIFIER

A. Derived from natural organic plant sources containing no growth or germination-inhibiting materials.

1. Capable of hydrating in water, and to readily blend with other slurry materials.
2. Wood Cellulose Fiber: Add as tracer.
3. Manufacturers and Products:
   a. Chevron Asphalt Co.; CSS 1.
   b. Terra; Tack AR.
   c. J-Tack; Reclamare.
   d. Or approved equal.

2.04 EROSION CONTROL BLANKET AND LOGS

A. Material:

1. Excelsior or straw; anchorages as recommended by manufacturer.
2. Photo-degradable material so that it will naturally degrade and deteriorate in its entirety.
3. Pins and Staples: “U” shaped with legs 8 inches long and 1-inch crown. Made of Wire 0.162-inch in diameter minimum. “T” shaped pins are not permitted.

2.05 SILT FENCE

A. Woven or non-woven geotextile material in accordance with Section 31 32 19.16, Geotextiles.

2.06 STRAW BALES

A. Machine baled clean salt hay or straw of oats, wheat, barley, or rye, free from seed of noxious weeds, using standard baling wire or string.

B. Posts for Anchoring Straw Bales: 2-inch by 2-inch untreated wood or commercially manufactured metal posts.

2.07 ROCK SOCKS

A. Furnish reinforced rock berms that consist of one continuous piece or constructed using wire wrapped joints.

B. Furnish with 1-inch chicken wire, double wrapped and made from a minimum of 10-gauge wire.

C. Use rock approximately 1.5-inch in size with fractured faces.

D. Reinforced rock berm diameter to be minimum 10 inches in diameter.

2.08 ROCK CHECK DAM

A. Space dams such that toe of upstream dam is the same elevation as the top of the downstream dam.

B. Excavate below flowline and line with standard erosion control geotextile.

C. Stone will be riprap with a median stone size D_{50}=12".

PART 3 EXECUTION

3.01 GENERAL

A. Comply with the SWMP. Modify the SWMP as required to address changing site conditions during construction.

B. Minimize the area of disturbance to defined Work Limits and limit the time bare soil is exposed.

C. Install erosion and sediment control measures as shown on the Drawings and in conformance to permit requirements. Additional measures may be required. Maintain erosion and sediment control measures throughout duration of the Work.

D. Do not affect land outside of the work limits with sediment releases resulting from the Work.

E. Provide and maintain Temporary Seeding.

3.02 SILT FENCE

A. Install and maintain silt fence in accordance with requirements herein and as shown on the Drawings.

3.03 MULCHING

A. Application: Sufficiently loose to permit penetration of sunlight and air circulation, and sufficiently dense to shade ground, reduce evaporation rate, and prevent or materially reduce erosion of underlying soil.

3.04 TACKIFIER

A. Apply on areas mulched with straw.

B. Spray on within 4 hours of mulch applications and per manufacturer's instructions.

3.05 EROSION BLANKET

A. Use erosion blankets on slopes equal to or steeper than 3H:1V. Add blankets after application of mulch.

B. Blankets should consist of a biodegradable (12 to 18 months) straw or coconut mat.

C. Blankets will be placed vertically on slopes in accordance with manufacturer's instructions.

3.06 STRAW BALES

A. Embed minimum of 4 inches in flat-bottomed trench.

B. Place with ends tightly abutting or overlapped. Corner abutment is not acceptable.

C. Install so that bale bindings are oriented around the sides and not over the top and bottom of the bale.

D. Use two posts for each bale. Drive posts through the bale until top of post is flush with top of bale.

E. Wedge loose straws in any gaps between bales.

3.07 EQUIPMENT REFUELING, CLEANING, MAINTENANCE

A. Take measures to prevent spills. These measures may include the placement of a temporary berm around the fueling, cleaning, and maintenance areas and placement of drip pans and/or mats under valves, tank openings, and vehicle engines undergoing maintenance. Maintain an adequate supply of absorbents during fueling and maintenance. Remove vehicles and equipment that are leaking fluids from the construction site. Clean up spills immediately and properly dispose of spilled materials/absorbents offsite. Notify CONSTRUCTION MANAGER of spills.

3.08 CONCRETE WASHOUT

A. Place concrete washouts where needed. Do not place washouts within 500 feet of any waterway. Obtain approval of locations by CONSTRUCTION MANAGER prior to installation.

B. Do not dispose of washout water or concrete waste onsite. Washout water and concrete waste must be contained within containment area on polyethylene liner. Allow washout water to evaporate prior to removal of concrete waste. Dispose of concrete waste offsite.

C. Restore washout location per Section 32 91 13, Soil Preparation.

3.09 TRASH DISPOSAL

A. Store trash generated onsite in covered bins or dumpsters. Dispose of trash offsite at a designated facility. Keep dumpsters at least 500 feet from waterways.

3.10 PORTABLE TOILETS

A. Place portable toilets throughout the construction areas as needed. Empty by a waste contractor and transport and dispose of waste offsite at a designated facility. Keep toilets at least 500 feet from waterways.

3.11 STORAGE—GENERAL

A. Store storage containers, drums, and bags away from traffic to prevent accidental spills. Keep covers on drums to reduce build-up of precipitation. Store containers of fluids on pallets or other similar structures to prevent contact between the drum and the ground surface.

B. Appropriately label containers to show the name, type of substance, health hazards, and other appropriate information. Store in a covered structure where possible to minimize exposure to precipitation. Place signs and placards at the appropriate locations to inform construction personnel of material storage areas, other designated areas, and potential hazards.

3.12 STORAGE—CHEMICALS, HERBICIDES, FERTILIZERS

A. If chemicals, herbicides, and/or fertilizers are stored onsite, store a minimum of 500 feet away from the flow line of any channel. Store these materials in a covered building or other structure, when possible, to minimize the exposure to precipitation and the potential for contamination of stormwater.

3.13 VEHICLE LOADING AND UNLOADING

A. Excavated soils, equipment, and construction materials are loaded into trucks for transport to other construction areas or offsite. Monitor loading and unloading of soils and materials to ensure that spilled material is cleaned up as soon as possible to avoid transport offsite by stormwater.

3.14 EMPLOYEE TRAINING

A. Conduct periodic meetings for construction personnel to familiarize employees with the SWMP and to discuss day-to-day erosion and sediment control practices. Employees need to be aware of potential pollutant sources, BMP performance and maintenance, and spill response.

3.15 CHANGES TO SWMP

A. Changes and updates to the SWMP can be handwritten on the appropriate page(s). Include a log of updates to the SWMP at substantial completion.

3.16 CONTROL OF SURFACE WATER

A. Control surface water in accordance with the requirements of the CDPHE Construction Stormwater permit, SWMP, Construction Dewatering Discharge permits, and grading, erosion, and sediment control permits.

B. Keep ditches, culverts, and natural drainages continuously free of construction materials and debris. Do not store equipment, materials, debris, fuel or lubricants or stockpiles in any drainage area.

3.17 WATER POLLUTION CONTROL

A. Protect the Work and temporary facilities from damage to flooding, runoff, surface water flows, and related subsurface flows until final Project closeout. Replace damage from said flows in accordance with the Contract Documents.

B. Divert sanitary sewage and nonstorm waste flow interfering with construction and requiring diversion to sanitary sewers. Do not cause or permit action to occur which would cause an overflow or spill.

C. Implement Sampling programs for water discharged from the Site in accordance with any permit conditions.

END OF SECTION

SECTION 01 58 00
PROJECT SIGN

PART 1 GENERAL

1.01 ACTION SUBMITTALS

A. Project Sign: Submit color proof sheet of project sign layout.

PART 2 PRODUCTS

2.01 PROJECT SIGN

A. Provide one, 8-foot wide by 6-foot high, sign constructed of 0.125-inch thick aluminum sheet, as shown in the supplement to this section.

PART 3 EXECUTION

3.01 PROJECT SIGN

A. Install sign in location and orientation as directed by CONSTRUCTION MANAGER.

B. Install sign with foundations, sign posts, and mountings to hold sign in proper position and resist swaying in wind.

C. Maintain sign for duration of Project. Replace if necessary.

D. Remove sign during demobilization.

3.02 SUPPLEMENTS

A. The supplement listed below, following "End of Section," is part of this Specification.

1. Project sign.

END OF SECTION

SUPPLEMENT

8 ‘- 0”

6 ‘- 0”

Southern Delivery System
Raw Water Pipeline S1

1”

Colorado Springs Utilities
It’s how we’re all connected

City of Fountain
Pure Colorado

Security Water Utility Districts District

"Where Eagles Soar"
PUEBLO WEST METROPOLITAN DISTRICT

1”

Engineer: CH2M HILL
Construction Manager: MWH
Contractor: XXX

For More Information Call: (855) SDS-4YOU

Website: www.sdswater.org

Edge

SECTION 01 64 00
OWNER-FURNISHED PRODUCTS

PART 1 GENERAL

1.01 DEFINITIONS

A. Supplier: The party under separate contract with UTILITIES to furnish the products and special services specified herein.

1.02 UTILITIES FURNISHED PRODUCTS

A. Vent-O-Mat Automatic Valves:

1. UTILITIES-FURNISHED Vent-O-Mat Automatic Valves and locations for CONTRACTOR installation are as follows:
   a. Estimated date of arrival at UTILITES storage facility is: No earlier than August 1, 2011 and no later than December 15, 2011.
   b. Provide equipment and vehicles of necessary capacity to load item at UTILITIES storage facility and transport to Site.

Station	Designation	Pressure Class	Quantity	Description	Estimated Weight per each (pounds)
136+37	CARV S1-1	350	2	12-inch Vent-O-Mat Model RBXc 2531	780
209+85	CARV S1-2	325	2	12-inch Vent-O-Mat Model RBXc 2531	780
220+17	CARV S1-3	325	2	12-inch Vent-O-Mat Model RBXc 2531	780
243+08	CARV S1-4	350	2	8-inch Vent-O-Mat Model RBX 2531	214
259+80	CARV S1-5	350	2	8-inch Vent-O-Mat Model RBX 2531	214
292+12	CARV S1-6	350	2	6-inch Vent-O-Mat Model RBX 2531	152

B. DeZurik High Pressure Butterfly Valves:

1. UTILITIES-FURNISHED DeZurik High Pressure Butterfly Valves and locations for CONTRACTOR installation are as follows:
   a. Estimated date of arrival at UTILITES storage facility is: No earlier than August 1, 2011 and no later than December 15, 2011.

b. Provide equipment and vehicles of necessary capacity to load item at UTILITIES' storage facility and transport to Site.

Station	Designation	Pressure Class	Quantity	Description	Estimated Weight per each (pounds)
136+37	CARV S1-1	350	2	12-inch DeZurik BHP	250
209+85	CARV S1-2	325	2	12-inch DeZurik BHP	250
220+17	CARV S1-3	325	2	12-inch DeZurik BHP	250
243+08	CARV S1-4	350	2	8-inch DeZurik BHP	116
259+80	CARV S1-5	350	2	8-inch DeZurik BHP	116
292+12	CARV S1-6	350	2	6-inch DeZurik BHP	103

C. DeZurik High Pressure Butterfly Valves

1. UTILITIES-FURNISHED Vanessa Triple Offset Butterfly Valves and locations for CONTRACTOR installation are as follows:
   a. Estimated date of arrival at UTILITES storage facility is: No earlier than August 1, 2011 and no later than December 15, 2011.
   b. Provide equipment and vehicles of necessary capacity to load item at UTILITIES' storage facility and transport to Site.

Station	Designation	Pressure Class	Quantity	Description	Estimated Weight per each (pounds)
177+30	BO S1-1	375	1	8-inch Vanessa Series 30,000 QTF	218
212+81	BO S1-2	325	1	6-inch Vanessa Series 30,000 QTF	159
240+76	BO S1-3	350	1	6-inch Vanessa Series 30,000 QTF	159
256+50	BO S1-4	350	1	6-inch Vanessa Series 30,000 QTF	159
266+30	BO S1-5	350	1	6-inch Vanessa Series 30,000 QTF	159
177+30	BO S1-1	375	1	8-inch Vanessa Series 30,000 QTF	218

1.03 INFORMATION FURNISHED BY UTILITIES

A. Shop drawings related to UTILITIES-furnished products will be made available for CONTRACTOR's use in performing the work under this section.

B. Manufacturer's installation, operation, and maintenance instructions for UTILITIES-furnished products will be made available.

1.04 SUBMITTALS

A. Action Submittals:

1. Shop Drawings:
   a. Show layout, location, and identification of materials provided by CONTRACTOR for installation of UTILITIES-furnished products.
   b. Include pipe, fittings, valves, specialties, hangers, supports, equipment, and required specialties.
   c. Accurately show openings in floors, walls, and other parts of structure.
   d. Submit complete list of materials to be furnished, and include data necessary to allow UTILITIES to determine their fitness for the work.

1.05 TRANSFER OF PRODUCTS

A. Unless indicated otherwise, items will be furnished f.o.b. to UTILITIES at 59 North Laser Drive, Pueblo West, CO 81007.

B. Upon delivery, conduct with UTILITIES or CONSTRUCTION MANAGER a joint inspection for the purpose of identifying product, general verification of quantities, and observation of apparent condition. Such inspection will not be construed as final or as receipt of any product that, as a result of subsequent inspections and tests, are determined to be nonconforming.

C. Damaged or incomplete products to be returned for replacement will not be unloaded, except as necessary to expedite return shipment. UTILITIES will submit claims for transportation damage and expedite replacement of damaged, defective, or deficient items.

D. Indicate signed acceptance of delivery on a copy of the invoice.

E. If CONTRACTOR is not prepared to accept delivery of UTILITIES-furnished products by either the specified Estimated Date of Arrival or such UTILITIES-confirmed delivery date, as specified herein, associated costs incurred by UTILITIES shall be borne by CONTRACTOR Such costs may include, but not be limited to, demurrage, interest, insurance costs, additional administrative and engineering costs, additional factory and field technical support, additional storage and reshipping costs, cost escalation, and extended warranty costs due.

1.06 UNLOADING, STORAGE AND MAINTENANCE

A. Subsequent to transfer, if UTILITIES-furnished products are delivered after CONTRACTOR's Notice to Proceed, CONTRACTOR shall have complete responsibility for unloading UTILITIES-furnished products. Unload product in accordance with manufacturers' instructions, or as specified.

B. Store, protect, and maintain product to prevent damage until final acceptance of completed work. Damage to or loss of products after date of transfer to CONTRACTOR shall be repaired to original condition, or replaced with new identical products, at the discretion of CONSTRUCTION MANAGER.

C. Maintain complete inventory of UTILITIES-furnished products after their transfer to CONTRACTOR.

1.07 SCHEDULING AND SEQUENCING

A. Include sequencing constraints specified herein as part of Progress Schedule.

B. CONSTRUCTION MANAGER will keep Contractor informed of probable delivery date changes.

C. CONSTRUCTION MANAGER will confirm delivery date with CONTRACTOR 10 days prior to scheduled delivery, and within 24 hours of expected delivery time.

D. Where a preinstallation meeting is required by this Section, provide a minimum of 10 days' advance written notice to UTILITIES of the proposed date for starting installation.

E. Provide a minimum of 10 days notice to CONSTRUCTION MANAGER that UTILITIES-furnished product is ready for special services listed herein to be furnished by UTILITIES through its contract with seller. Bear the cost of damages assessed to UTILITIES by seller resulting from delays caused by CONTRACTOR.

1.08 EXTRA MATERIALS

A. Unless otherwise specified, UTILITIES will take acceptance of, and be responsible for storing associated extra materials and special tools upon delivery.

1.09 PREINSTALLATION MEETING

A. Arrange and attend a preinstallation meeting with the CONSTRUCTION MANAGER to review general procedures, erection and installation instructions, and installation sequence.

B. Additional meetings prior to installation may be required, as determined by UTILITIES, to transmit UTILITIES' installation instructions to Contractor.

PART 2 PRODUCTS

2.01 BOLTS NUTS, AND GASKETS

A. Provide required bolts, nuts, and gaskets not provided by UTILITIES. See Supplement to this Section.

B. See Sections 33 05 01.02, Welded Steel Pipe and Fittings – Weld Before Backfill; 40 27 00, Process Piping General; and 40 27 02, Process Valves and Operators.

PART 3 EXECUTION

3.01 INSTALLATION

A. Install products in conformance with UTILITIES-furnished product shop drawings and installation instructions.

B. Provide piping and appurtenances to achieve a complete and functional system.

C. Mechanical equipment shall be properly aligned, plumb and level, with no stresses on connecting piping.

3.02 FIELD FINISHING

A. Products will be delivered with prime and finish coat(s) applied.

1. Touch up or repair damage to coatings resulting from unloading, storage, installation, testing, and startup.
2. If finish coats are damaged extensively after transfer, completely repaint.
3. Touch up, repair, or complete repainting shall match color of original paint, and shall be fully compatible with applied primers and finish.

3.03 PRODUCT PROTECTION

A. Immediately after installation, lubricate components in accordance with manufacturer's instructions.

B. Follow manufacturer's instructions for protection and maintenance during storage, after installation but prior to testing and startup, and after startup but prior to acceptance.

C. Furnish incidental supplies including lubricants, cleaning fluids, and similar products as needed for protecting and maintaining the UTILITIES-furnished products.

3.04 TESTS AND INSPECTION

A. Perform tests and inspections of installed products in accordance with requirements shown herein, Section 01 91 14, Equipment Testing and Facility Startup, and manufacturer's instructions.

3.05 SUPPLEMENTS

A. The supplement listed below, following "End of Section," is part of this Specification.

1. UTILITIES Contract with Supplier and corresponding specification sections for UTILITIES-furnished products.

END OF SECTION

SUPPLEMENT

APPENDIX A – STATEMENT OF WORK (SOW)
IFB-AW-19685 Southern Delivery System (SDS)
Specialty Valve Purchase

1.0 Introduction

Colorado Springs Utilities (UTILITIES) is soliciting a vendor (VENDOR) to provide specialty valves and manufacturer's field services for three segments of the Southern Delivery System (SDS) pipeline. UTILITIES is seeking bids for valves manufactured by three (3) companies, Vent-O-Mat, DeZurik, and Vanessa. Only bids for these approved manufacturers will be accepted.

Pursuant to Appendix B – Invitation for Bid Form, interested vendors may submit a bid for Vent-O-Mat (Items 1-10), DeZurik (Items 11-18), and/or Vanessa (Items 19-25) valves. UTILITIES intends to award up to three (3) purchase order contracts, one (1) contract for each manufacturer grouping, based on lowest responsive bid per manufacturer grouping. Interested vendors are encouraged to submit any discount structure that would apply if multiple manufacturer valve groupings are awarded.

2.0 Background

The SDS Program is a project to transport water from the Arkansas River to the City of Colorado Springs. Phase 1 of the SDS program includes the construction of underground raw and finished water transmission pipeline, ranging in diameter from thirty-six inches (36") to ninety inches (90"). More information regarding the comprehensive scope of the SDS Program is available online at http://sdswater.org.

3.0 Scope

UTILITIES is purchasing valves for the following pipeline segments:

A. Raw Water South 1 Pipeline (RWPL S1) consists of approximately 22,522 feet (4.3 miles) of 66-inch raw water transmission pipeline in Pueblo County.
B. Raw Water South 3 Pipeline (RWPL S3) consists of approximately 40,160 feet (7.6 miles) of 66-inch raw water transmission pipeline in Pueblo County.
C. Raw Water South 4A Pipeline (RWPL S4A) consists of approximately 46,869 feet (8.9 miles) of 66-inch raw water transmission pipeline in El Paso County.

Specialty valves include high pressure isolation valves and combination air release/vacuum valves. IFB-AW-19685 is based on material take-off quantities, specifications, and reference design documents.

VENDOR shall provide qualified staff to perform the following services (Work):

1. Provide Most Favorable Pricing for Valves
2. Prepare and Submit Shop Drawings and other Submittals Required in the Specifications
3. Deliver Valves to UTILITIES' Facility
4. Invoice UTILITIES for Delivered Valves by Work Package
5. Perform Manufacturer's Field Services for Period of Performance

APPENDIX A – STATEMENT OF WORK (SOW)
IFB-AW-19685 Southern Delivery System (SDS)
Specialty Valve Purchase

4.0 Tasks, Deliverables & Schedule

4.1 Provide Most Favorable Pricing for Valves

VENDOR shall submit its most favorable bid for delivered valves pursuant to Appendix B – Invitation for Bid Form. Unit cost shall include, but not limited to, the cost of materials, storage, insurance, transportation, delivery, profit, and overhead. Costs associated with submittals and manufacturer's field services shall be submitted on page 27 of Appendix B.

4.2 Prepare and Submit Shop Drawings and other Submittal Items

As required by the specifications in Attachments 1-3, VENDOR will submit product data, shop drawings, and product schedules for review and approval by UTILITIES. VENDOR shall not procure valves until submittal approval is obtained.

4.3 Deliver Valves to Utilities

The awarded VENDOR(s) shall deliver each valve type in one (1) scheduled delivery to the designated location. Valves shall be delivered no earlier than August 1, 2011, and no later than December 15, 2011.

Valve delivery shall be coordinated with the following UTILITIES representative:

(TBD)
Colorado Springs Utilities
E-Mail:
Office Phone:
Mobile:

VENDOR will deliver valves to the following location:

SDS Pueblo Field Office
Colorado Springs Utilities
59 N. Laser Drive
Pueblo West, CO 81007

4.4 Invoice UTILITIES for Delivered Valves

VENDOR shall deliver and invoice UTILITIES for the ordered valves no later than December 15, 2011. Valves shall be separated into work packages on the invoice as follows (Note: The following is for invoice purposes only; use Appendix B to submit a bid.):

VENT-O-MAT VALVES					
Item No.	**Item Description**	**Estimated Quantity**	**Unit**	**Bid Unit Price**	**Extended Bid Unit Price**
S1-1	6-inch Class 350 CARV (EA)	2	EA		
S1-2	8-inch Class 350 CARV (EA)	4	EA		

APPENDIX A – STATEMENT OF WORK (SOW)
IFB-AW-19685 Southern Delivery System (SDS)
Specialty Valve Purchase

VENT-O-MAT VALVES					
Item No.	**Item Description**	**Estimated Quantity**	**Unit**	**Bid Unit Price**	**Extended Bid Unit Price**
S1-3	12-inch Class 325 CARV (EA)	4	EA		
S1-4	12-inch Class 350 CARV (EA)	2	EA		
Subtotal of All Extended Bid Unit Prices for Segment S1				$	
S3-1	8-inch Class 175 CARV	2	EA		
S3-2	8-inch Class 175 Surge CARV	2	EA		
S3-3	10-inch Class 175 CARV	3	EA		
S3-4	12-inch Class 175 Surge CARV	3	EA		
S3-5	12-inch Class 175 CARV	8	EA		
Subtotal of All Extended Bid Unit Prices for Segment S3				$	
S4A-1	8-inch Class 175 CARV	2	EA		
S4A-2	10-inch Class 175 CARV	6	EA		
S4A-3	10-inch Class 175 Surge CARV	4	EA		
S4A-4	12-inch Class 175 Surge CARV	6	EA		
S4A-5	12-inch Class 175 CARV	11	EA		
Subtotal of All Extended Bid Unit Prices for Segment S4A				$	
Total of All Extended Bid Unit Prices for Segments S1, S3, and S4A				$	

DEZURIK HIGH PERFORMANCE BUTTERFLY VALVES					
Item No.	**Item Description**	**Estimated Quantity**	**Unit**	**Bid Unit Price**	**Extended Bid Unit Price**
S1-1	6-inch Class 350 BFV (EA)	2	EA		
S1-2	8-inch Class 350 BFV (EA)	4	EA		
S1-3	12-inch Class 325 BFV (EA)	4	EA		

APPENDIX A – STATEMENT OF WORK (SOW)
IFB-AW-19685 Southern Delivery System (SDS)
Specialty Valve Purchase

DEZURIK HIGH PERFORMANCE BUTTERFLY VALVES					
Item No.	**Item Description**	**Estimated Quantity**	**Unit**	**Bid Unit Price**	**Extended Bid Unit Price**
S1-4	12-inch Class 350 BFV (EA)	2	EA		
Subtotal of All Extended Bid Unit Prices for Segment S1				$	
S3-1	8-inch Class 175 BFV	4	EA		
S3-2	10-inch Class 175 BFV	3	EA		
S3-3	12-inch Class 175 BFV	11	EA		
Subtotal of All Extended Bid Unit Prices for Segment S3				$	
S4A-1	8-inch Class 175 BFV	3	EA		
S4A-2	10-inch Class 175 BFV	10	EA		
S4A-3	12-inch Class 175 BFV	17	EA		
S4A-4	16-inch Class 175 BFV	2	EA		
Subtotal of All Extended Bid Unit Prices for Segment S4A				$	
Total of All Extended Bid Unit Prices for Segments S1, S3 and S4A				$	

VANESSA TRIPLE OFFSET VALVES					
Item No.	**Item Description**	**Estimated Quantity**	**Unit**	**Bid Unit Price**	**Extended Bid Unit Price**
S1-1	6-inch Class 325 BFV	1	EA		
S1-2	6-inch Class 350 BFV	3	EA		
S1-3	8-inch Class 375 BFV	1	EA		
Subtotal of All Extended Bid Unit Prices for Segment S1				$	
S3-1	6-inch Class 175 BFV	3	EA		
S3-2	8-inch Class 175 BFV	3	EA		
Subtotal of All Extended Bid Unit Prices for Segment S3				$	

APPENDIX A – STATEMENT OF WORK (SOW)
IFB-AW-19685 Southern Delivery System (SDS)
Specialty Valve Purchase

VANESSA TRIPLE OFFSET VALVES					
Item No.	**Item Description**	**Estimated Quantity**	**Unit**	**Bid Unit Price**	**Extended Bid Unit Price**
S4A-1	6-inch Class 175 BFV	8	EA		
S4A-2	8-inch Class 175 BFV	1	EA		
S4A-3	10-inch Class 175 BFV	1	EA		
S4A-4	16-inch Class 175 BFV	2	EA		
Subtotal of All Extended Bid Unit Prices for Segment S4A				$	
Total of All Extended Bid Unit Prices for Segments S1, S3 and S4A				$	

Original invoices shall be sent to UTILITIES' Accounts Payable and UTILITIES' SDS Program at the following email addresses:

accountspayablemail@csu.org
sdsap@csu.org

Payment shall be considered to have been made on the date that appears on the payment check, or the specified payment date of an electronic funds transfer. When the discount date falls on a Saturday, Sunday, or legal holiday payment shall be made on the following business day.

4.5 Performance Period for Manufacturer's Field Services
VENDOR shall provide Manufacturer's Field Services in accordance with Specification Sections 01 43 33 and 40 27 02 during the construction periods for RWPL S1, RWPL S3 and RWPL S4A. The following table highlights the anticipated schedule for these construction packages:

Work Package	Advertise Date	Contractor Notice to Proceed	Substantial Completion
RWPL S1	7/28/11	9/23/11	2/6/12
RWPL S3	5/23/11	11/14/11	7/27/12
RWPL S4A	10/24/12	4/29/13	1/28/14

The construction schedule is subject to change based on the needs of the SDS Program. Construction for currently planned SDS work packages is anticipated to be complete by 2015.

APPENDIX A – STATEMENT OF WORK (SOW)
IFB-AW-19685 Southern Delivery System (SDS)
Specialty Valve Purchase

5.0 Applicable Documents

IFB-AW-19685	SDS Specialty Valve Purchase
APPENDIX A	STATEMENT OF WORK
	ATTACHMENT 1 Specifications for the Purchase of Vent-o-mat Valves Southern Delivery System Raw Water Pipelines S1, S3, and S4A CH2M Hill, April 2011
	ATTACHMENT 2 Specifications for the Purchase of DeZurik High Pressure Butterfly Valves Southern Delivery System Raw Water Pipelines S1, S3, and S4A CH2M Hill, April 2011
	ATTACHMENT 3 Specifications for the Purchase of Vanessa Triple Offset Valves Southern Delivery System Raw Water Pipelines S1, S3, and S4A CH2M Hill, April 2011
APPENDIX B	INVITATION FOR BID FORM
APPENDIX C	PURCHASE ORDER TEMPLATE AND GENERAL PROVISIONS

6.0 Travel

UTILITIES will not reimburse for expenses related to transportation, travel, and subsistence VENDOR incurs in discharge of duties connected with the Work. Any such costs should be built into the bid as provided on page 27 of Appendix B – Invitation for Bid Form.

7.0 Communications

Any requests for clarification or additional information regarding the submission of a bid shall be directed ***only*** to:

Amy M. Watson, J.D., Principal Contracting Agent
Colorado Springs Utilities
P.O. Box 1103, MC 920
Colorado Springs, CO 80947-0920
E-Mail: amwatson@csu.org
Phone: (719) 668-8081
Fax: (719) 668-3867

SUPPLEMENT

Documents for the
Purchase of DeZurik High Pressure Butterfly Valves

SOUTHERN DELIVERY SYSTEM
RAW WATER PIPELINE S1, S3 and S4A

VOLUME 1 OF 1

SPECIFICATIONS

April 2011

OWNER'S REPRESENTATIVE

DARLENE GARCIA, P.E.
COLORADO SPRINGS UTILITIES
121 SOUTH TEJON, 3RD FLOOR
COLORADO SPRINGS, CO 80947
PHONE: (719) 668-4097
FAX: (719) 668-8734
E-MAIL: dgarcia@csu.org

ENGINEER'S REPRESENTATIVE

BRUCE J. SPILLER, P.E.
CH2M HILL
90 SOUTH CASCADE AVENUE, SUITE 700
COLORADO SPRINGS, CO 80903
PHONE: (719) 477-4914
FAX: (719) 634-9954
E-MAIL: bspiller@ch2m.com

COLORADO SPRINGS UTILITIES

COLORADO SPRINGS, COLORADO

DOCUMENTS

for the Purchase of DeZurik High Pressure Butterfly Valves

SOUTHERN DELIVERY SYSTEM

RAW WATER PIPELINE S1, S3 and S4A

Contract No. xxxxxxxx

****

COLORADO REGISTERED PROFESSIONAL ENGINEER
WILLIAM P. MOSSON
31123
4/13/11

****

The Technical Specifications presented herein were prepared under the direction of the Engineer above for the following purposes only:

- **Colorado Springs Utilities' purchase of the valves as described herein**

It is the responsibility of the Final Design Engineer of Record to prepare and take responsible charge of the final design drawings and specifications that incorporate materials procured by Colorado Springs Utilities under these specifications, including the correct selection of valves.

CH2M HILL

Colorado Springs, CO

April 2011

Project No. 171473.20.S1 Copy No. _____

CONTENTS

END OF SECTION

SECTION 01 11 00
SUMMARY OF WORK

PART 1 GENERAL

1.01 WORK COVERED BY CONTRACT DOCUMENTS

A. General: The Summary of Work is a brief description of the Work to be provided by the SUPPLIER.

B. The completed Work will provide UTILITIES with DeZurik BHP valves according to the following schedule. Work includes furnishing and delivery of valves to location specified in the Contract Documents, preparation of submittal and operation and maintenance data, and manufacturer's field services and certifications following valve installation as provided in a separate contract between UTILITIES and the CONSTRUCTION CONTRACTOR.

Valve	Contract		
	Segment S1	**Segment S3**	**Segment S4A**
6-inch Class 350 BFV	2		
8-inch Class 175 BFV		4	3
8-inch Class 350 BFV	4		
10-inch Class 175 BFV		3	10
12-inch Class 175 BFV		11	17
12-inch Class 325 BFV	4		
12-inch Class 350 BFV	2		
16-inch Class 175 BFV			2

1.02 WORK NOT COVERED BY CONTRACT DOCUMENTS

A. Installation of valves.

B. Bolt and gasket sets.

PART 2 PRODUCTS (NOT USED)

PART 3 EXECUTION (NOT USED)

END OF SECTION

SECTION 01 22 13
UNIT PRICE MEASUREMENT AND PAYMENT

PART 1 GENERAL

A. Item Descriptions: Item descriptions are provided below for the items listed in Payment Schedule. The price bid for each item shall cover costs in connection with the Work, including furnishing labor, materials, equipment, supplies, and appurtenances; providing construction plant equipment and tools; performing necessary labor and supervision to provide the items as described and specified in the Contract Documents; and overhead and profit. Related work not specifically identified in the item descriptions is considered incidental and a subsidiary obligation of the SUPPLIER and costs in connection therewith shall be included in the price bid for work items. Typical incidental items may include, but are not limited to, administration, communications, and coordination with UTILITIES, CONSTRUCTION MANAGER, CONSTRUCTION CONTRACTORS and ENGINEER for three (3) construction contracts, and quality control.

No.	Item	Description	Payment
S1-1	6-inch Class 350 BFV (EA)	Unit Price bid includes costs for furnishing and delivering 6-inch Class 350 BFV to specified location, including manufacturer's specified field services.	Payment will be based on the number of 6-inch Class 350 BFVs delivered to location specified.
S1-2	8-inch Class 350 BFV (EA)	Unit Price bid includes costs for furnishing and delivering 8-inch Class 350 BFV to specified location, including manufacturer's specified field services.	Payment will be based on the number of 8-inch Class 350 BFVs delivered to location specified.
S1-3	12-inch Class 325 BFV (EA)	Unit Price bid includes costs for furnishing and delivering 12-inch Class 325 BFV to specified location, including manufacturer's specified field services.	Payment will be based on the number of 12-inch Class 325 BFVs delivered to location specified.
S1-4	12-inch Class 350 BFV (EA)	Unit Price bid includes costs for furnishing and delivering 12-inch Class 350 BFV to specified location, including manufacturer's specified field services.	Payment will be based on the number of 12-inch Class 350 BFVs delivered to location specified.

No.	Item	Description	Payment
S3-1	8-inch Class 175 BFV	Unit Price bid includes costs for furnishing and delivering 8-inch Class 175 BFV to specified location, including manufacturer's specified field services.	Payment will be based on the number of 8-inch Class 175 BFVs delivered to location specified.
S3-2	10-inch Class 175 BFV	Unit Price bid includes costs for furnishing and delivering 10-inch Class 175 BFV to specified location, including manufacturer's specified field services.	Payment will be based on the number of 10-inch Class 175 BFVs delivered to location specified.
S3-3	12-inch Class 175 BFV	Unit Price bid includes costs for furnishing and delivering 12-inch Class 175 BFV to specified location, including manufacturer's specified field services.	Payment will be based on the number of 12-inch Class 175 BFVs delivered to location specified.
S4A-1	8-inch Class 175 BFV	Unit Price bid includes costs for furnishing and delivering 8-inch Class 175 BFV to specified location, including manufacturer's specified field services.	Payment will be based on the number of 8-inch Class 175 BFVs delivered to location specified.
S4A-2	10-inch Class 175 BFV	Unit Price bid includes costs for furnishing and delivering 10-inch Class 175 BFV to specified location, including manufacturer's specified field services.	Payment will be based on the number of 10-inch Class 175 BFVs delivered to location specified.
S4A-3	12-inch Class 175 BFV	Unit Price bid includes costs for furnishing and delivering 12-inch Class 175 BFV to specified location, including manufacturer's specified field services.	Payment will be based on the number of 12-inch Class 175 BFVs delivered to location specified.
S4A-4	16-inch Class 175 BFV	Unit Price bid includes costs for furnishing and delivering 16-inch Class 175 BFV to specified location, including manufacturer's specified field services.	Payment will be based on the number of 16-inch Class 175 BFVs delivered to location specified.

PART 2 PRODUCTS (NOT USED)

PART 3 EXECUTION (NOT USED)

END OF SECTION

SECTION 01 33 00
SUBMITTAL PROCEDURES

PART 1 GENERAL

1.01 SUMMARY

A. This Section includes administrative and procedural requirements for submitting Shop Drawings, Product Data, Samples, and other submittals.

1.02 DEFINITIONS

A. Action Submittals: Written and graphic information that requires CONSTRUCTION MANAGER's responsive action.

B. Informational Submittals: Written information that does not require CONSTRUCTION MANAGER's responsive action. Submittals may be rejected for not complying with requirements.

1.03 SUBMITTAL PROCEDURES

A. Contract Manager System: To expedite the transmittal and review of Submittal data, the CONSTRUCTION MANAGER has established a web-based "Contract Manager" System as the contract administration and document control software on the Project. Use this system to transmit documents and track the submittals, RFIs and overall Project communication. Use the "Contract Manager" System for submittal data that can be easily transmitted electronically.

B. Forms: The preferred forms for submittals are as developed by the CONSTRUCTION MANAGER or resident in the "Contract Manager". Obtain consent of the CONSTRUCTION MANAGER prior to using other forms. The following list of forms may be used but the list is not necessarily inclusive:

1. CM – 307, Memorandum of Delay.
2. CM – 432, System Outage Request.
3. CM – 503, Request for Shutdown.
4. CM – 1004, Request for Adjustment of Retainage.
5. CM – 1005, Consent of Surety for Reduction of Partial Release of Retainage.
6. CM – 1006, Consent of Surety for Final Payment.
7. CM – 1007, Affidavit of Payment.
8. CM – 1202, CONTRACTOR's Certification of Completion.
9. CM – 1301, Partial Waiver of Lien.
10. CM – 1302, Final Waiver of Lien.
11. CM – 1303, Affidavit of Release of Lien.

C. Coordination: Coordinate preparation and processing of submittals with performance of construction activities.

1. Coordinate each submittal with fabrication, purchasing, testing, delivery, other submittals, and related activities that require sequential activity.
2. Coordinate transmittal of different types of submittals for related parts of the Work so processing will not be delayed because of need to review submittals concurrently for coordination.
   a. CONSTRUCTION MANAGER reserves the right to withhold action on a submittal requiring coordination with other submittals until related submittals are received.

D. Within 7 days after the date of commencement as stated in the Notice to Proceed, submit the following items for review:

1. A preliminary schedule of Shop Drawings, Samples, and proposed Substitutes ("Or-Equal") submittals as required in the Contract Documents.

E. Processing Time: Allow enough time for submittal review, including time for resubmittals, as follows. Time for review commences on CONSTRUCTION MANAGER's receipt of submittal. No extension of the Contract Time will be authorized because of failure to transmit submittals enough in advance of the Work to permit processing, including resubmittals.

1. Initial Review: Allow 15 working days for initial review of each submittal. Allow additional time if coordination with subsequent submittals is required. CONSTRUCTION MANAGER will advise when a submittal being processed must be delayed for coordination. It is considered reasonable that a complete and acceptable submittal is made to the CONSTRUCTION MANAGER by the first resubmittal on an item. UTILITIES reserves the right to withhold monies to cover additional costs of the CONSTRUCTION MANAGER's review beyond the first resubmittal. The CONSTRUCTION MANAGER's maximum review period for each submittal or resubmittal will be 15 working days.
2. Intermediate Review: If intermediate submittal is necessary, process it in same manner as initial submittal.
3. Resubmittal Review: Allow 15 working days for review of each resubmittal.

F. Identification: Place a permanent label or title block on each submittal for identification.

1. Indicate name of firm or entity that prepared each submittal on label or title block.

2. Provide a space approximately 6 by 8 inches on label or beside title block to record review and approval markings and action taken by CONSTRUCTION MANAGER and/or ENGINEER.
3. Include the following information on label for processing and recording action taken:
   a. Project name.
   b. Date.
   c. Name and address of CONSTRUCTION MANAGER and ENGINEER.
   d. Name and address of SUPPLIER.
   e. Name and address of subcontractor.
   f. Name and address of supplier.
   g. Name of manufacturer.
   h. Submittal number or other unique identifier, including revision identifier.
      1) Use the Specification Section number followed by a decimal point and then a sequential number (e.g., 061000.01) for the submittal number. Resubmittals include an alphabetic suffix after another decimal point (e.g., 061000.01.A).
   i. Number and title of appropriate Specification Section.
   j. Drawing number and detail references, as appropriate.
   k. Location(s) where product is to be installed, as appropriate.
   l. Other necessary identification.

G. Deviations: Highlight, encircle, or otherwise specifically identify deviations from the Contract Documents on submittals.

H. Additional Copies: Unless additional copies are required for final submittal, and unless CONSTRUCTION MANAGER and/or ENGINEER observes noncompliance with provisions in the Contract Documents, initial submittal may serve as final submittal.

   1. Additional copies submitted for maintenance manuals will not be marked with action taken and will be returned.

I. Transmittal: Package each submittal individually and appropriately for transmittal and handling. Include the CONSTRUCTION MANAGER's standard submittal transmittal form, a reproducible copy of which is available from the CONSTRUCTION MANAGER, with each transmitted submittal. Submittals without the form or where applicable items on the form are not completed will be returned for resubmittal. CONSTRUCTION MANAGER will discard submittals received from sources other than SUPPLIER.

   1. Organization:
      a. Use a single submittal transmittal form for each technical specification section or item or class of material or equipment for which a submittal is required. A single submittal covering

multiple sections will not be acceptable, unless the primary specification references other sections for components.

b. On the transmittal form, index the components of the submittal and insert tabs in the submittal to match the components. Relate the submittal components to specification paragraph and subparagraph, Drawing number, detail number, schedule title or room number as applicable.

c. Unless indicated otherwise, match terminology and equipment names and numbers used in submittals with those used in the Contract Documents.

d. Disorganized submittals will be returned without review.

J. Resubmittals: Make resubmittals in same form and number of copies as initial submittal.

1. Note date and content of previous submittal.
2. Note date and content of revision in label or title block and clearly indicate extent of revision.
3. Resubmit submittals until they are marked “Reviewed with CONSTRUCTION MANAGER and/or ENGINEER’s action stamp”.

K. Distribution: Furnish copies of final submittals to manufacturers, subcontractors, suppliers, fabricators, installers, authorities having jurisdiction, and others as necessary for performance of construction activities. Show distribution on transmittal forms.

1. Use for Construction: Use only final submittals with mark indicating “Reviewed with CONSTRUCTION MANAGER and/or ENGINEER’S action stamp” taken by CONSTRUCTION MANAGER and/or ENGINEER.

1.04 CONTRACTOR'S USE OF ENGINEER'S CAD FILES

A. General: ENGINEER's CAD files will not be provided for use in connection with Project.

PART 2 PRODUCTS

2.01 ACTION SUBMITTALS

A. General: Prepare and submit Action Submittals required by individual Specification Sections.

B. Product Data: Collect information into a single submittal for each element of construction and type of product or equipment.

1. If information must be specially prepared for submittal because standard printed data are not suitable for use, submit as Shop Drawings, not as Product Data.
2. Mark each copy of each submittal to show which products and options are applicable.
3. Include the following information, as applicable:
   a. Manufacturer's written recommendations.
   b. Manufacturer's product specifications.
   c. Manufacturer's installation instructions.
   d. Manufacturer's catalog cuts.
   e. Printed performance curves.
   f. Operational range diagrams.
   g. Compliance with specified referenced standards.
   h. Testing by recognized testing agency.
4. Number of Copies: Submit five copies of Product Data, unless otherwise indicated. Provide one additional copy for submittals requiring review by a consultant. CONSTRUCTION MANAGER will return two (2) copies. Mark up and retain one returned copy as a Project Record Document.

C. Shop Drawings: Wherever called for in the Contract Documents or where required by the CONSTRUCTION MANAGER, furnish a Shop Drawing submittal. Shop Drawings may include detail design calculations, shop-prepared drawings, fabrication and installation drawings, erection drawings, lists, graphs, catalog sheets, data sheets, and similar items. Include the signature and seal of an engineer registered in the appropriate branch in the State of Colorado, unless otherwise indicated, whenever design calculations are required to be submitted as part of a submittal. Prepare Project-specific information, drawn accurately to scale. Do not base Shop Drawings on reproductions of the Contract Documents or standard printed data.

1. Preparation: Fully illustrate requirements in the Contract Documents. Include the following information, as applicable:
   a. Dimensions.
   b. Identification of products.
   c. Fabrication and installation drawings.
   d. Shop work manufacturing instructions.
   e. Templates and patterns.
   f. Schedules.
   g. Notation of coordination requirements.
   h. Notation of dimensions established by field measurement.
   i. Relationship to adjoining construction clearly indicated.
   j. Seal and signature of professional engineer if specified.
2. Transmittal Form: Include the CONSTRUCTION MANAGER's standard submittal transmittal form, a reproducible copy of which is available from the CONSTRUCTION MANAGER, with Shop Drawing

submittals. A submittal without the form or where applicable items on the form are not completed will be returned for resubmittal.

3. Sheet Size: Except for templates, patterns, and similar full-size drawings, submit Shop Drawings on sheets at least 8-1/2 by 11 inches but no larger than 36 by 48 inches.
4. Number of Copies: Submit one original plus six hard copies and one electronic copy ("PDF" format) of each submittal. CONSTRUCTION MANAGER will return a transcribed copy in non-editable electronic format.
5. Collate and bind: Number every page in a submittal in sequence. Collate and staple or bound, as appropriate each copy of a submittal. The CONSTRUCTION MANAGER will not collate sheets or copies.

D. Product Schedule or List: As required in individual Specification Sections, prepare a written summary indicating types of products required for the Work and their intended location.

1. Number of Copies: Submit four (4) copies of product schedule or list, unless otherwise indicated. CONSTRUCTION MANAGER will return one copy.

2.02 INFORMATIONAL SUBMITTALS

A. General: Prepare and submit Informational Submittals required by other Specification Sections.

1. Number of Copies: Three copies of each submittal, unless otherwise indicated. CONSTRUCTION MANAGER will not return copies.
2. Certificates and Certifications: Provide a notarized statement that includes signature of entity responsible for preparing certification. Include the signature of an officer or other individual authorized to sign documents on behalf of that entity for certificates and certifications.

PART 3 EXECUTION

3.01 SUPPLIER'S REVIEW

A. Review each submittal and check for coordination with other Work of the Contract and for compliance with the Contract Documents. Note corrections and field dimensions. Mark with approval stamp before submitting to CONSTRUCTION MANAGER.

B. Approval Stamp: Stamp each submittal with a uniform, approval stamp. Include Project name and location, submittal number, Specification Section title and number, name of reviewer, date of CONTRACTOR's approval, and statement certifying that submittal has been reviewed, checked, and approved for compliance with the Contract Documents.

3.02 CONSTRUCTION MANAGER'S ACTION

A. General: CONSTRUCTION MANAGER will not receive submittals that do not bear CONTRACTOR's approval stamp and will return them without action.

B. Action Submittals: CONSTRUCTION MANAGER will receive each submittal and forward to appropriate entity to make marks to indicate corrections or modifications required, and return it. CONSTRUCTION MANAGER will stamp each submittal when received. Reviewing entity will stamp each submittal with an action stamp and will mark stamp appropriately to indicate action taken, as follows:

1. NO EXCEPTIONS TAKEN: If a submittal is returned marked "NO EXCEPTIONS TAKEN," formal revision and resubmission will not be required.
2. MAKE CORRECTIONS NOTED: If a submittal is returned marked "MAKE CORRECTIONS NOTED," make the corrections on the submittal, but formal revision and resubmission will not be required.
3. AMEND AND RESUBMIT: If a submittal is returned marked "AMEND AND RESUBMIT," revise it and resubmit the required number of copies. Resubmittal of portions of multi-page or multi-drawing submittals will **not** be allowed. For example, if a Shop Drawing submittal consisting of 10 drawings contains one drawing noted as "AMEND AND RESUBMIT," the submittal as a whole is deemed "AMEND AND RESUBMIT" and all 10 drawings are required to be resubmitted.
4. REJECTED – SEE REMARKS: If a submittal is returned marked "REJECTED – SEE REMARKS," means either that the proposed material or product does not satisfy the specification, the submittal is so incomplete that it cannot be reviewed, or is a substitution request not submitted in accordance with the Contract Documents. Prepare a new submittal that is in conformance with the Contract Documents and submit the required number of copies for review.

C. Fabrication of an item may commence only after the CONSTRUCTION MANAGER has returned the pertinent submittals marked either "NO EXCEPTIONS TAKEN" or "MAKE CORRECTIONS NOTED." Corrections indicated on submittals are considered as changes necessary to meet the requirements of the Contract Documents and not as changes to the contract requirements.

D. Review submittals prior to submission to the CONSTRUCTION MANAGER. Sign and date each submittal as being correct and in strict conformance with the Contract Documents. In the case of Shop Drawings, date and sign each sheet. Note deviations from the Contract Documents on the transmittal sheet. The CONSTRUCTION MANAGER will only receive submittals that have been so verified. Non-verified submittals will be returned without action taken.

E. Corrections or comments made on the SUPPLIER's Shop Drawings during review do not relieve the SUPPLIER from compliance with Contract Drawings and Specifications. Review is for conformance to the program, design concept and general compliance with the Contract Documents only. The SUPPLIER is responsible for confirming and correlating all dimensions and quantities, fabrication processes and techniques, coordinating the Work of all trades, satisfactory and safe performance of the Work, and the quality, means, and methods of construction.

F. Informational Submittals: CONSTRUCTION MANAGER will review each submittal and will not return it, or will return it if it does not comply with requirements. CONSTRUCTION MANAGER will forward each submittal to appropriate party.

G. Partial submittals are not acceptable, will be considered non-responsive, and will be returned without review.

H. Submittals not required by the Contract Documents may not be reviewed and may be discarded.

END OF SECTION

SECTION 01 43 33
MANUFACTURERS' FIELD SERVICES

PART 1 GENERAL

1.01 DEFINITIONS

A. Person-Day: One person for 8 hours within regular working hours.

1.02 QUALIFICATION OF MANUFACTURER'S REPRESENTATIVE

A. Authorized representative of the manufacturer, factory trained, and experienced in the technical applications, installation, operation, and maintenance with full authority by the manufacturer to issue the certifications required of the manufacturer. Additional qualifications may be specified elsewhere.

B. Representative subject to acceptance by CONSTRUCTION MANAGER. No substitute representatives will be allowed unless prior written approval by such has been given.

PART 2 PRODUCTS (NOT USED)

PART 3 EXECUTION

3.01 FULFILLMENT OF SPECIFIED MINIMUM SERVICES

A. Furnish manufacturers' services when required by an individual specification section, to meet the requirements of this Section.

B. Where time is necessary in excess of that stated in the Specifications for manufacturers' services, or when a minimum time is not specified, the time required to perform the specified services will be considered incidental.

C. Schedule manufacturer' services to avoid conflict with other onsite testing or other manufacturers' onsite services.

D. Determine, before scheduling services, that conditions necessary to allow successful testing have been met.

E. Only those days of service approved by CONSTRUCTION MANAGER will be credited to fulfill the specified minimum services.

F. When specified in individual specification sections, manufacturer's onsite services shall include:

1. Assistance during product (system, subsystem, or component) installation to include observation, guidance, instruction of CONTRACTOR's assembly, erection, installation or application procedures.
2. Inspection, checking, and adjustment as required for product (system, subsystem, or component) to function as warranted by manufacturer.
3. Providing, on a daily basis, copies of manufacturers' representatives field notes and data to CONSTRUCTION MANAGER.
4. Revisiting the Site as required to correct problems and until installation and operation are acceptable to CONSTRUCTION MANAGER.
5. Resolution of assembly or installation problems attributable to, or associated with, respective manufacturer's products and systems.
6. Additional requirements may be specified elsewhere.

3.02 MANUFACTURER'S CERTIFICATE OF COMPLIANCE

A. When specified in individual Specification section, submit prior to shipment of product or material.

END OF SECTION

SECTION 01 77 00
CLOSEOUT PROCEDURES

PART 1 GENERAL

1.01 SUBMITTALS

A. Informational Submittals:

1. Submit with application for final payment.
   a. Special bonds, Special Guarantees, and Service Agreements.
   b. Consent of Surety to Final Payment: As required in General Conditions.
   c. Releases or Waivers of Liens and Claims: As required in General Conditions.
   d. Final Application for Payment.
   e. Extra Materials: As required by individual Specification sections.

PART 2 PRODUCTS (NOT USED)

PART 3 EXECUTION (NOT USED)

END OF SECTION

SECTION 01 78 23
OPERATION AND MAINTENANCE DATA

PART 1 GENERAL

1.01 SECTION INCLUDES

A. Information for the preparation, submission, and review of Operations and Maintenance (O&M) Data, as required by individual Specification sections.

1.02 DEFINITIONS

A. Preliminary Data: Initial and subsequent submissions to CONSTRUCTION MANAGER for ENGINEER's review.

B. Final Data: ENGINEER-accepted data, submitted as specified herein.

C. Maintenance Operation: As used on Maintenance Summary Form is defined to mean any routine operation required to ensure satisfactory performance and longevity of equipment. Examples of typical maintenance operations are lubrication, belt tensioning, adjustment of pump packing glands, and routine adjustments.

1.03 SEQUENCING AND SCHEDULING

A. Equipment and System Data:

1. Provide manuals for equipment and systems prepared by equipment manufacturer or system Supplier.
2. Preliminary Data:
   a. Do not submit until Shop Drawing for equipment or system has been reviewed and approved by ENGINEER.
   b. Submit prior to shipment date. Include copies of warranties, bonds, and service agreements if specified.
3. Final Data: Submit Instructional Manual Formatted data not more than 90 days after notice to proceed.

1.04 DATA FORMAT

A. Prepare preliminary data in the form of an instructional manual. Prepare final data in data compilation format on electronic media.

B. Instructional Manual Format:

1. Binder: Commercial quality, permanent, three-ring or three-post binders with durable plastic cover.
2. Size: 8-1/2 inches by 11 inches, minimum.

3. Cover: Identify manual with typed or printed title "OPERATION AND MAINTENANCE DATA, VOLUME NO. ____ OF ____," and list:
   a. Project title.
   b. Designate applicable system, equipment, material, or finish.
   c. Identity of separate structure as applicable.
   d. Identity of general subject matter covered in manual. Identity of equipment number and Specification section.
4. Title Page:
   a. SUPPLIER name, address, and telephone number.
      1) Provide name and telephone number of local source of supply for parts and replacement.
5. Table of Contents:
   a. Neatly typewritten and arranged in systematic order with consecutive page numbers.
   b. Identify each product by product name and other identifying numbers or symbols as set forth in Contract Documents.
6. Paper: 20-pound minimum, white for typed pages.
7. Text: Manufacturer's printed data, or neatly typewritten.
8. Three-hole punch data for binding and composition; arrange printing so that punched holes do not obliterate data.
9. Provide material suitable for reproduction, with quality equal to original. Photocopying of material will be acceptable, except for material containing photographs.

C. Electronic Media Format:

1. Portable Document Format (PDF):
   a. After preliminary data has been found to be acceptable to ENGINEER, submit Operation and Maintenance data in PDF format on CD.
   b. Files to be exact duplicates of ENGINEER-accepted preliminary data. Arrange by specification number and name.
   c. Files to be fully functional and viewable in most recent version of Adobe Acrobat.

1.05 SUBMITTALS

A. Informational:

1. Data Outline: Submit two copies to CONSTRUCTION MANAGER of a detailed outline of proposed organization and contents of Final Data prior to preparation of Preliminary Data.
2. Preliminary Data:
   a. Submit five copies to CONSTRUCTION MANAGER for ENGINEER's review.

b. If data meets conditions of the Contract:
   1) One copy will be retained by UTILITIES.
   2) One copy will be retained by SUPPLIER.
   3) Two copies will be retained by CONSTRUCTION MANAGER.
   4) One copy will be retained in ENGINEER's file.

c. If data does not meet conditions of the Contract, copies will be returned to CONSTRUCTION MANAGER and distributed as follows:
   1) Copies will be returned to SUPPLIER with ENGINEER's comments (on separate document) for revision.
   2) ENGINEER's comments will be retained in ENGINEER's file.
   3) Resubmit five copies revised in accordance with ENGINEER's comments.

3. Final Data: Submit three copies to CONSTRUCTION MANAGER in format specified herein.

1.06 DATA FOR EQUIPMENT AND SYSTEMS

A. Content For Each Unit (or Common Units) and System:

1. Product Data:
   a. Include only those sheets that are pertinent to specific product.
   b. Clearly annotate each sheet to:
      1) Identify specific product or part installed.
      2) Identify data applicable to installation.
      3) Delete references to inapplicable information.
   c. Function, normal operating characteristics, and limiting conditions.
   d. Performance data, engineering data, nameplate data, and tests.
   e. Complete nomenclature and commercial number of replaceable parts.
   f. Original manufacturer's parts list, illustrations, detailed assembly drawings showing each part with part numbers and sequentially numbered parts list, and diagrams required for maintenance.
   g. Spare parts ordering instructions.
2. Drawings: Supplement product data with Drawings as necessary to clearly illustrate:
   a. Format:
      1) Provide reinforced, punched, binder tab; bind in with text.
      2) Reduced to 8-1/2 inches by 11 inches, or 11 inches by 17 inches folded to 8-1/2 inches by 11 inches.

3) Where reduction is impractical, fold and place in 8-1/2-inch by 11-inch envelopes bound in text.
4) Identify Specification section and product on Drawings and envelopes.

b. Relations of component parts of equipment and systems.

3. Instructions and Procedures: Within text, as required to supplement product data.
   a. Format:
      1) Organize in consistent format under separate heading for each different procedure.
      2) Provide logical sequence of instructions for each procedure.
      3) Provide information sheet for UTILITIES' personnel, including:
         a) Proper procedures in event of failure.
         b) Instances that might affect validity of guarantee or Bond.
   b. Installation Instructions: Including alignment, adjusting, calibrating, and checking.
   c. Operating Procedures:
      1) Startup, break-in, routine, and normal operating instructions.
      2) Safety precautions.
      3) Special operating instructions.
   d. Maintenance and Overhaul Procedures:
      1) Routine maintenance.
      2) Guide to troubleshooting.
      3) Disassembly, removal, repair, reinstallation, and re-assembly.
4. Guarantee, Bond, and Service Agreement: Within text, as required to supplement product data.

B. Maintenance Summary:

1. Compile individual Maintenance Summary for each applicable equipment item, respective unit or system, and for components or sub-units.
2. Format:
   a. Use Maintenance Summary Form bound with this section or electronic facsimile of such.
   b. Each Maintenance Summary may take as many pages as required.
   c. Use only 8-1/2-inch by 11-inch size paper.
   d. Complete using typewriter or electronic printing.
3. Include detailed lubrication instructions and diagrams showing points to be greased or oiled; recommend type, grade, and temperature range of lubricants and frequency of lubrication.
4. Recommended Spare Parts:
   a. Data to be consistent with manufacturer's Bill of Materials/Parts List furnished in O&M manuals.

b. “Unit” is the unit of measure for ordering the part.
c. “Quantity” is the number of units recommended.
d. “Unit Cost” is the current purchase price.

1.01 MATERIAL SAFETY DATA SHEETS (MSDS)

A. Provide MSDSs for chemicals that will become part of SDS and chemicals required for future maintenance.

1.02 SUPPLEMENTS

A. The supplements listed below, following “End of Section,” are part of this Specification.

1. Forms: Maintenance Summary Form.

PART 2 PRODUCTS (NOT USED)

PART 3 EXECUTION (NOT USED)

END OF SECTION

MAINTENANCE SUMMARY FORM

PROJECT:_____ CONTRACT NO.:_____

1. EQUIPMENT ITEM_____

2. MANUFACTURER _____

3. EQUIPMENT/TAG NUMBER(S) _____

4. WEIGHT OF INDIVIDUAL COMPONENTS (OVER 100 POUNDS)_____

5. NAMEPLATE DATA (hp, voltage, speed, etc.) _____

6. MANUFACTURER'S LOCAL REPRESENTATIVE _____

   a. Name_____ Telephone No. _____

   b. Address _____

7. MAINTENANCE REQUIREMENTS

Maintenance Operation Comments	**Frequency**	**Lubricant (If Applicable)**
List briefly each maintenance operation required and refer to specific information in manufacturer's standard maintenance manual, if applicable. (Reference to manufacturer's catalog or sales literature is not acceptable.)	List required frequency of each maintenance operation.	Refer by symbol to lubricant required.

8. LUBRICANT LIST

Reference Symbol	Shell	Exxon Mobile	Chevron Texaco	BP Amoco	Or Equal
List symbols used in No. 7 above.	List equivalent lubricants, as distributed by each manufacturer for the specific use recommended.				

9. RECOMMENDED SPARE PARTS FOR OWNER'S INVENTORY.

Part No.	Description	Unit	Quantity	Unit Cost
Note: Identify parts provided by this Contract with two asterisks.				

SECTION 09 90 04
PAINTING

PART 1 GENERAL

1.01 REQUIREMENT

A. The Work of this section includes the materials application, testing, and clean up of painting as described herein.

1.02 REFERENCES

A. The following is a list of standards which may be referenced in this section:

1. NACE International (NACE): RP0188, Discontinuity (Holiday) Testing of New Protective Coatings on Conductive Substrates.
2. The Society for Protective Coatings (SSPC):
   a. PA 1, Shop, Field, and Maintenance Painting.
   b. PA 2, Measurement of Dry Coating Thickness with Magnetic Gages.
   c. PA 3, Guide to Safety in Paint Applications.
   d. SP 1, Solvent Cleaning.
   e. SP 2, Hand Tool Cleaning.
   f. SP 3, Power Tool Cleaning.
   g. SP 5, Joint Surface Preparation Standard White Metal Blast Cleaning.
   h. SP 6, Joint Surface Preparation Standard Commercial Blast Cleaning.
   i. SP 7, Joint Surface Preparation Standard Brush-Off Blast Cleaning.
   j. SP 10, Joint Surface Preparation Standard Near-White Blast Cleaning.
   k. SP 11, Power Tool Cleaning to Bare Metal.
   l. SP 12, Surface Preparation and Cleaning of Steel and Other Hard Materials by High- and Ultrahigh-Pressure Water Jetting Prior to Recoating.
   m. SP 13, Surface Preparation of Concrete.
3. NSF International (NSF): 61 Drinking Water Components—Health Effects.

1.03 DEFINITIONS

A. Terms used in this section:

1. Coverage: Total minimum dry film thickness in mils or square feet per gallon.
2. MDFT: Minimum Dry Film Thickness, mils.
3. MDFTPC: Minimum Dry Film Thickness Per Coat, mils.
4. Mil: Thousandth of an inch.
5. PSDS: Paint System Data Sheet.
6. PVC: Polyvinyl Chloride.
7. SP: Surface Preparation.

1.04 SUBMITTALS

A. Action Submittals:

1. Shop Drawings:
   a. Product Data Sheets:
      1) For each paint system, furnish Paint System Data Sheet (PSDS), manufacturer's technical data sheets, and paint colors available (where applicable). Sample PSDS form is appended to end of this section.
      2) Submit required information on a system-by-system basis.
      3) Furnish copies of paint system submittals to coating applicator.
      4) Indiscriminate submittal of manufacturer's literature is not acceptable.

B. Informational Submittals:

1. Manufacturer's written verification that submitted products are suitable for the intended use.
2. Factory Applied Coatings: Manufacturer's certification stating factory applied coating system meets or exceeds requirements specified herein.
3. If manufacturer of finish coating differs from that of shop primer, provide both manufacturers' written confirmation that materials are compatible.

1.05 QUALITY ASSURANCE

A. Applicator's Experience: Minimum 5 years' practical experience in application of specified products.

B. Regulatory Requirements:

1. Meet federal, state, and local requirements limiting emission of volatile organic compounds.
2. Perform surface preparation and painting in accordance with recommendations of the following:
   a. Paint manufacturer's instructions.
   b. SSPC PA 3, Guide to Safety in Paint Applications.
   c. Federal, state, and local agencies having jurisdiction.

1.06 PROJECT CONDITIONS

A. Environmental Requirements:

1. Do not apply paint in temperatures outside of manufacturer's recommended maximum or minimum allowable, or in dust, smoke-laden atmosphere, damp or humid weather.
2. Do not perform abrasive blast cleaning whenever relative humidity exceeds 85 percent, or whenever surface temperature is less than 5 degrees F above dewpoint of ambient air. Strictly adhere to coating manufacturer's recommendations.

1.07 EXTRA MATERIALS

A. Provide small quantity kits for touchup painting and for painting other small areas.

PART 2 PRODUCTS

2.01 MANUFACTURERS

A. Use a nationally recognized paint manufacturer of paints and protective coatings regularly engaged in production of such materials that have essentially identical service conditions as this Project.

B. Minimum of 5 years of verifiable experience in manufacture of specified products.

2.02 ABRASIVE MATERIALS

A. Select abrasive type and size to produce surface profile that meets coating manufacturer's recommendations for specific primer and coating system to be applied.

2.03 PAINT MATERIALS

A. General:

1. Material Quality: Manufacturer's highest quality products and suitable for the intended service.
2. Materials Including Primer and Finish Coats: Produced by same paint manufacturer.
3. Thinners, Cleaners, Driers, and Other Additives: As recommended by paint manufacturer of particular coating.

B. Products:

Product	Definition
NSF Epoxy	Polyamide epoxy, approved for potable water contact and conforming to NSF 61.

2.04 COLORS

A. Provide as shown for equipment and appurtenances and designated herein selected by UTILITIES.

B. Formulate with colorants free of lead, lead compounds, or other materials that might be affected by presence of hydrogen sulfide or other gas likely to be present at the Site.

C. Proprietary identification of colors is for identification only. Any authorized manufacturer may supply matches.

2.05 SHOP FINISHES

A. Shop Blast Cleaning: Reference paragraph Shop Coating Requirements, this section.

B. Shop Coating Requirements: When required by equipment Specifications, prime and finish coat such equipment in shop by manufacturer.

PART 3 EXECUTION

3.01 GENERAL

A. Surface Preparation Inspection: Inspect and provide substrate surfaces prepared in accordance with these Specifications and printed directions and recommendations of paint manufacturer whose product is to be applied. In event of conflict, more stringent applies.

B. The intention of these Specifications is for new, interior and exterior metal and submerged metal surfaces to be painted, whether specifically mentioned or not, except as modified herein.

C. Perform painting in accordance with recommendations of the following:

1. Paint manufacturer's instructions.
2. Federal, state, and local agencies having jurisdiction.

3.02 PROTECTION OF MATERIALS NOT TO BE PAINTED

A. Remove, mask, or otherwise protect surfaces not being painted.

3.03 PREPARATION OF SURFACES

A. Metal Surface Preparation:

1. General:
   a. Submit samples prior to surface preparation blasting.
   b. Conform to current Society for Protective Coatings specifications as follows:
      1) Solvent Cleaning: SP 1.
      2) Hand Tool Cleaning: SP 2.
      3) Power Tool Cleaning: SP 3.
      4) White Metal Blast Cleaning: SP 5.
      5) Commercial Blast Cleaning: SP 6.
      6) Brush-Off Blast Cleaning: SP 7.
      7) Near-White Blast Cleaning: SP 10.
      8) Power Tool Cleaning to Bare Metal: SP 11.
      9) High Pressure Water Jetting: SP 12.
      10) Surface Preparation of Concrete: SP 13.
   c. Where OSHA or EPA regulations preclude standard abrasive blast cleaning, wet- or vacu-blast methods may be required. Follow coatings manufacturers' recommendations for wet-blast additives and first coat application.
   d. Hand-tool clean areas that cannot be cleaned by power-tool cleaning.

2. Blast Cleaning Requirements:
   a. Comply with applicable federal, state, and local, air pollution and environmental control regulations for blast cleaning and disposition of spent aggregate and debris.
   b. Alternatives to standard abrasive blast cleaning methods subject to ENGINEER review and approval prior to starting work.

3.04 PAINT MIXING

A. Multiple-Component Coatings:

1. Prepare using the contents of container for each component as packaged by paint manufacturer.
2. No partial batches will be permitted.
3. Do not use multiple-component coatings that have been mixed beyond their pot life.
4. Mix only components specified and furnished by paint manufacturer.
5. Do not intermix additional components for reasons of color or otherwise, even within same generic type of coating.

B. Keep paint materials sealed when not in use.

C. Where more than one coat of material is applied within given system, alternate color to provide visual reference that required number of coats has been applied.

3.05 PAINT APPLICATION

A. General:

1. Apply coating in accordance with paint manufacturer's recommendations. Allow sufficient time between coats to assure thorough drying of previously applied paint.
2. Paint units to be bolted together and to structures, prior to assembly or installation.

B. Shop Primed or Factory Finished Surfaces:

1. Hand or power sand areas of chipped, peeled, or abraded coating, feathering the edges. Follow with a spot primer using specified primer.
2. For two-package or converted coatings, consult coatings manufacturer for specific procedures as relates to manufacturer's products.
3. Prior to application of finish coats, clean shop-primed surfaces free of dirt, oil, and grease and apply mist coat of specified primer, 1-mil dry film thickness.

C. Manufacturer Applied Paint Systems:

1. Repair abraded areas on factory finished items in accordance with the equipment manufacturer's directions.
2. Carefully blend repaired areas into original finish.

3.06 FIELD QUALITY CONTROL

A. Testing:

1. Test Gauges to be Provided:
   a. Magnetic type dry film thickness gauge, to test coating thickness specified in mils, as manufactured by Nordson Corp., Anaheim, CA; Mikrotest.
   b. Electrical holiday detector, low voltage, wet sponge type, to test completed coating systems, 20 mils or less MDFT, for holidays and discontinuities as manufactured by Tinker and Rasor, San Gabriel, CA, Model M-1.
2. Number of Coats:
   a. Minimum required, irrespective of coating thickness.
   b. Additional coats may be required to obtain minimum required paint thickness, depending on method of application, differences in manufacturers' products, and atmospheric conditions.
3. Application Thickness:
   a. Do not exceed coating manufacturer's recommendations.
   b. Use wet film thickness gauge to measure proper coating thickness during application.
4. Film Thickness Measurement and Electrical Inspection of Coated Surface:
   a. Perform with properly calibrated instruments.
   b. Recoat and repair as necessary for compliance with Specifications.
5. Visually inspect plastic surfaces to ensure proper and complete coverage has been attained.
6. Give particular attention to edges, angles, flanges, and other similar areas, where insufficient film thickness are likely to be present, and ensure proper millage in these areas.
7. Apply additional coats as required to complete hiding of underlying coats. Complete hiding so that additional coats would not increase hiding.
8. Thickness and Continuity Testing:
   a. Measure coating thickness specified in mils with magnetic type dry film thickness gauge in accordance with SSPC PA2.
   b. Check each coat for correct millage. Do not make measurement within 8 hours, minimum, after application of coating.

c. Test finish coat, 20 mils thick or less, for holidays and discontinuities with electrical holiday detector, low voltage, wet sponge type in accordance with NACE RP0188.
d. After repaired and recoated areas have dried sufficiently, retest each repaired area.

B. Damaged Coatings, Pinholes, and Holidays:

1. Feather edges and repair in accordance with recommendations of paint manufacturer.
2. Hand or power sand visible areas of chipped, peeled, or abraded paint, and feather edges. Follow with primer and finish coat in accordance with Specifications. Depending on extent of repair and appearance, finish sanding and topcoat may be required.
3. Apply finish coats, including touchup and damage-repair coats, in a manner, which will present uniform texture and color-matched appearance.

C. Unsatisfactory Application:

1. Clean and top coat surfaces found to have improper finish color or insufficient film thickness.
2. Evidence of runs, bridges, shiners, laps, or other imperfections will be cause for rejection.
3. Repair defects in coating system per written recommendations of coating manufacturer.

3.07 PROTECTIVE COATINGS SYSTEMS

A. System No. 1 Submerged Metal:

Surface Prep.	**Paint Material**	**Min. Coats, Cover**
SP5, White Metal Blast cleaning	NSF Epoxy	3 coats, 3 MDFT PC

3.08 SURFACES NOT REQUIRING PAINTING

A. Unless otherwise stated herein or shown, the following areas or items will not require painting:

1. Nonferrous and corrosion-resistant ferrous alloys such as copper, bronze, Monel, aluminum, chromium plate, atmospherically exposed weathering steel, and stainless steel.

3.09 PAINT APPLICATION SCHEDULE

A. Unless otherwise shown or specified in these Specifications, paint or coat Work in accordance with the following application schedule. In event of discrepancies or omissions in the following, request clarification from CONSTRUCTION MANAGER before starting work in question.

B. System No. 1 Submerged Metal: Use on the following items or areas:

1. Valve actuators.

3.10 SUPPLEMENT

A. The supplement listed below, following "End of Section," is a part of this Specification:

1. Data Sheet: Paint System Data Sheet (PSDS).

END OF SECTION

PAINT SYSTEM DATA SHEET

Complete and attach manufacturer's Technical Data Sheet to this PSDS for each coating system.

Paint System Number (from Spec.):
Paint System Title (from Spec.):
Coating Supplier:
Representative:
Surface Preparation:

Paint Material (Generic)	Product Name/Number (Proprietary)	Min. Coats, Coverage

Provide manufacturer's recommendations for the following parameters at temperature (F)/relative humidity:

Temperature/RH	50/50	70/30	90/25
Induction Time			
Pot Life			
Shelf Life			
Drying Time			
Curing Time			
Min. Recoat Time			
Max. Recoat Time			

Provide manufacturer's recommendations for the following:

Mixing Ratio: _____

Maximum Permissible Thinning:_____

Ambient Temperature Limitations: min.:_____ max.:_____

Surface Temperature Limitations: min.:_____ max.:_____

Surface Profile Requirements: min.:_____ max.:_____

Attach additional sheets detailing manufacturer's recommended storage requirements and holiday testing procedures.

SECTION 40 27 02
HIGH PRESSURE BUTTERFLY VALVES

PART 1 GENERAL

1.01 SCOPE OF WORK

A. Colorado Springs Utilities Water Line Extension and Service Standards are incorporated by reference.

B. Materials and methods specifically referenced in this section supersede those published by Colorado Springs Utilities.

1.02 DESCRIPTION OF SYSTEM

A. General: The equipment and materials specified are intended to be standard equipment of proven ability for use in controlling the flow of raw water under pressure for transmission pipelines.

B. This section includes materials.

1.03 REFERENCES

A. The following is a list of standards that may be referenced in this section:

1. American National Standards Institute (ANSI): B16.1, Cast Iron Pipe Flanges and Flanged Fittings.
2. American Society of Mechanical Engineers (ASME): Section VIII, Boiler and Pressure Vessel Code—Section VIII—Pressure Vessels.
3. American Water Works Association (AWWA):
   a. C111/A21.11, Rubber-Gasket Joints for Ductile-Iron Pressure Pipe and Fittings.
   b. C207, Steel Pipe Flanges for Waterworks Service.
   c. C500, Metal-Seated Gate Valves for Water Supply Service.
   d. C504, Rubber-Seated Butterfly Valves.
   e. C509, Resilient-Seated Gate Valves for Water Supply Service.
   f. C510, Double Check Valve, Backflow Prevention Assembly.
   g. C540, Power-Actuating Devices for Valves and Sluice Gates.
   h. C550, Protective Epoxy Interior Coatings for Valves and Hydrants.
   i. C800, Underground Service Line Valves and Fittings.
4. ASTM International (ASTM):
   a. A276, Standard Specification for Stainless Steel Bars and Shapes.
   b. A351/A351M, Standard Specification for Castings, Austenitic, Austenitic-Ferric (Duplex), for Pressure-Containing Parts.
   c. A536, Standard Specification for Ductile Iron Castings.

d. A564/A564M, Standard Specification for Hot-Rolled and Cold-Finished Age-Hardening Stainless Steel Bars and Shapes.
e. A565, Standard Specification for Martensitic Stainless Steel Bars for High-Temperature Service.
f. B61, Standard Specification for Steam or Valve Bronze Castings.
g. B62, Standard Specification for Composition Bronze or Ounce Metal Castings.
h. B98/B98M, Standard Specification for Copper-Silicon Alloy Rod, Bar, and Shapes.
i. B127, Standard Specification for Nickel-Copper Alloy (UNS N04400) Plate, Sheet, and Strip.
j. B139, Standard Specification for Phosphor Bronze Rod, Bar and Shapes.
k. B164, Standard Specification for Nickel-Copper Alloy Rod, Bar, and Wire.
l. B194, Standard Specification for Copper-Beryllium Alloy Plate, Sheet, Strip, and Rolled Bar.
m. B584, Standard Specification for Copper Alloy Sand Castings for General Applications.
n. D429, Standard Test Methods for Rubber Property-Adhesion to Rigid Substrates.
o. D1784, Standard Specification for Rigid Poly(Vinyl Chloride) (PVC) Compounds and Chlorinated Poly(Vinyl Chloride) (CPVC) Compounds.

5. NSF International (NSF).

1.04 DESIGN REQUIREMENTS

A. Valves:

1. For the purposes of design calculations, the following is defined:
   a. Working Pressure (psi) equals Pressure Class:

1.05 SUBMITTALS

A. Action Submittals:

1. Shop Drawings:
   a. Product data sheets for each model, including number of turns open to close.
   b. Complete catalog information, descriptive literature, specifications, and identification of materials of construction.
   c. Sizing calculations for open-close/throttle and modulating valves.

B. Informational Submittals:

1. Manufacturer's Valve Certificate of Compliance with applicable standards, in accordance with Section 01 43 33, Manufacturers' Field Services.
2. Tests and inspection data.
3. Operation and Maintenance Data as specified in Section 01 78 23, Operation and Maintenance Data.

PART 2 PRODUCTS

2.01 GENERAL

A. Valves to include operator, actuator, worm and gear operator and operating nut.

B. Valve to be suitable for intended service. Renewable parts not to be of a lower quality than specified.

C. Furnish valves with no leakage (drip-tight) in either direction at the valve rated design pressures unless otherwise allowed for in this section.

D. Size operator and actuators to operate valve for the full range of pressures and velocities.

E. Valve to open by turning LEFT (counterclockwise).

F. Factory mount operator, actuator, and accessories.

2.02 MATERIALS

A. Bronze and brass valve components and accessories that have surfaces in contact with water to be alloys containing less than 16 percent zinc and 2 percent aluminum.

1. Approved alloys are of the following ASTM designations: B61, B62, B98/B98M (Alloy UNS No. C65100, C65500, or C66100), B139 (Alloy UNS No. C51000), B584 (Alloy UNS No. C90300 or C94700), B164, B194, and B127.
2. Stainless steel Alloy 18-8 may be substituted for bronze.

2.03 VALVES

A. Butterfly Valves:

1. Provide high pressure, lugged butterfly valves according to the schedule below. There are no "or equal" or substitutions for the named manufacturer allowed.
2. Flanges for Class 175 shall be raised-face, ASME B16.5 Class 150.

3. Flanges for Class 325 and Class 350 shall be raised face, ASME B16.5 Class 300.
4. Short body type with raised-face, flanged ends.
5. Type 316 stainless steel body (ASTM A351), Type 316 stainless steel disc edge, Type 316 stainless steel shaft, Buna-N rubber seat bonded or molded in body only, self-adjusting V-type multi-ring seals.
6. Operator: Enclosed gear type unit, horizontal stem with flange for multi-turn actuator.
7. Suitable for dead end service, long periods of nonuse, Open/Close or throttling service.

6-inch Class 350 BFV	DeZurik BHP
8-inch Class 175 BFV	DeZurik BHP
8-inch Class 350 BFV	DeZurik BHP
10-inch Class 175 BFV	DeZurik BHP
12-inch Class 175 BFV	DeZurik BHP
12-inch Class 325 BFV	DeZurik BHP
12-inch Class 350 BFV	DeZurik BHP
16-inch Class 175 BFV	DeZurik BHP

2.04 OPERATORS

A. Manual Operator:

1. General:
   a. Unless otherwise indicated, furnish valves with manual actuators. Furnish valves in sizes up to and including 4 inches with direct acting lever actuators of the valve manufacturer's standard design. Furnish valves greater than 4 inches in size with gear assisted manual actuators with a maximum operating pull of 40 pounds standard T-handled operating wrench. Furnish valves with worm-gear actuators.
   b. Manual worm gear actuators shall consist of a single or double reduction gear unit contained in a weather proof cast-iron or steel body with cover. Provide 2-inch square operating nut. Furnish the actuator capable of 90-degree rotation and equip with travel stops capable of limiting the valve opening and closing positions. The actuator shall consist of spur or helical gears and worm-gearing. The spur of helical gears shall be of hardened alloy steel and the worm-gear shall be bronze. The worm-gear shaft and the operating nut shall be 17-4 pH or similar stainless steel. Gearing

shall be designed for a 100 percent overload. Manual worm gear actuators manufactured by AUMA; Series GS, or approved equal.

c. Provide self-locking type valve actuators or equip with self-locking device as recommended by the valve manufacturer.

d. Furnish valve actuators with position indicators for quarter-turn valves.

e. Coat ferrous surfaces of the valve actuator in accordance with Section 09 90 04, Painting.

f. Provide valves with hermetically-sealed and grease-packed actuators capable of withstanding a submersion in water of up to 10 psig. Enclose moving parts of valve and operator in suitable housing to prevent contact with soil.

g. Design actuators for quarter-turn valves to withstand 450 foot-pounds of input torque at the fully open and fully closed positions.

PART 3 EXECUTION

3.01 MANUFACTURER'S SERVICES

A. The Supplier's authorized factory representative shall visit each construction site the first day CONSTRUCTION CONTRACTOR begins installation of valves. Instruct CONSTRUCTION CONTRACTOR on proper installation, adjustment and operation. Submit to CONSTRUCTION MANAGER a certificate that SUPPLIER has provide instruction as specified, including signature of CONSTRUCTION CONTRACTOR acknowledging receipt of instruction. See statement of work for period of performance.

B. The general vicinity of the construction sites are shown on the attached Vicinity Map following "End of Section."

3.02 SUPPLEMENTS

A. The supplements listed below, following "End of Section," are part of this Specification

1. Vicinity Map.

END OF SECTION

FILENAME: PP1_SP201nG30d_171473.dgn PLOT DATE: 4/8/2011

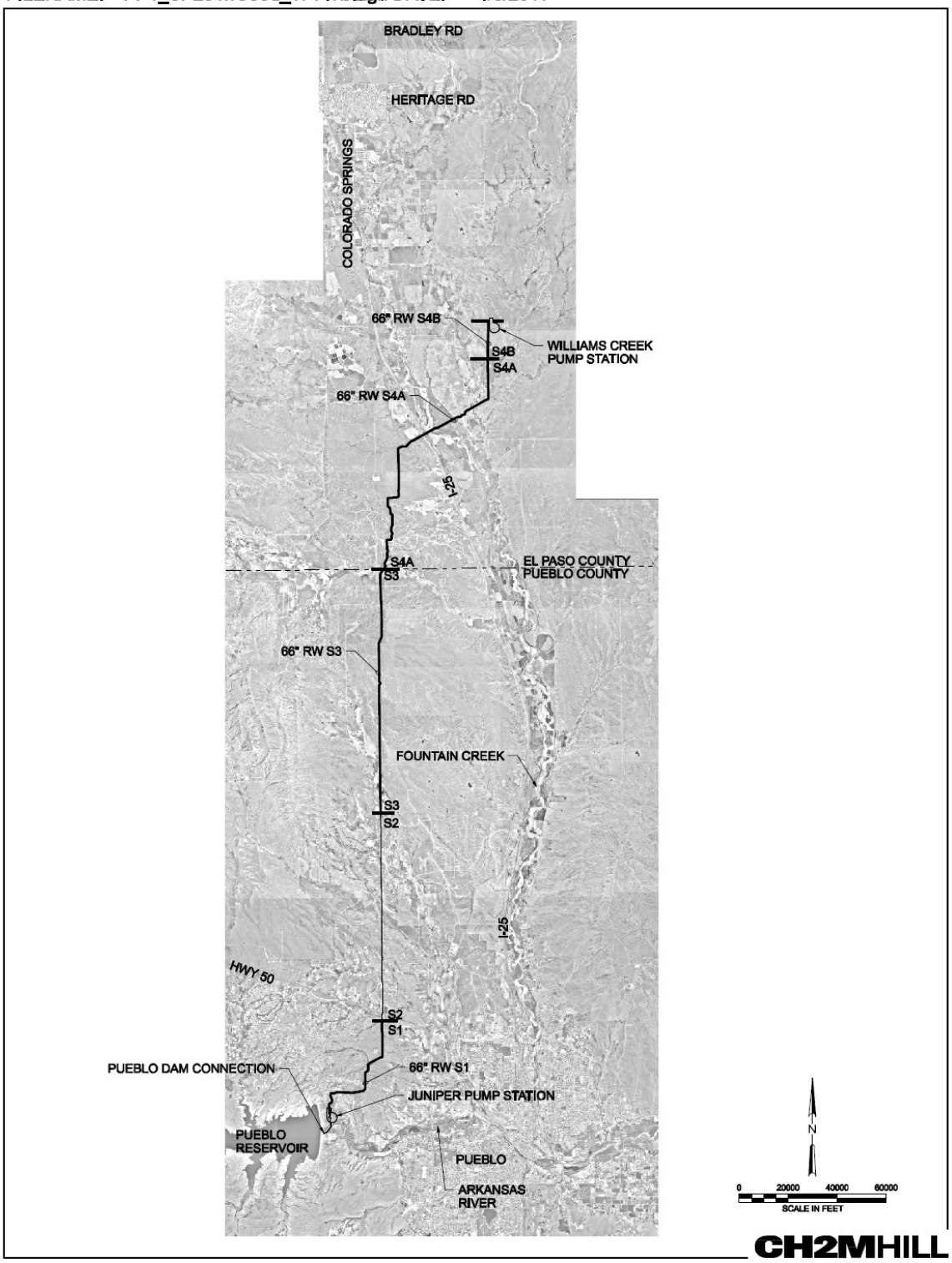

SU Project Number: SDS-002 CSU Work Order Number: 1146977

VICINITY MAP

SUPPLEMENT

Documents for the
Purchase of Vent-O-Mat Valves

SOUTHERN DELIVERY SYSTEM
RAW WATER PIPELINE S1

VOLUME 1 OF 1

SPECIFICATIONS

April 2011

OWNER'S REPRESENTATIVE

DARLENE GARCIA, P.E.
COLORADO SPRINGS UTILITIES
121 SOUTH TEJON, 3RD FLOOR
COLORADO SPRINGS, CO 80947
PHONE: (719) 668-4097
FAX: (719) 668-8734
E-MAIL: dgarcia@csu.org

ENGINEER'S REPRESENTATIVE

BRUCE J. SPILLER, P.E.
CH2M HILL
90 SOUTH CASCADE AVENUE, SUITE 700
COLORADO SPRINGS, CO 80903
PHONE: (719) 477-4914
FAX: (719) 634-9954
E-MAIL: bspiller@ch2m.com

COLORADO SPRINGS UTILITIES

COLORADO SPRINGS, COLORADO

DOCUMENTS

for the Purchase of Vent-O-Mat Valves

SOUTHERN DELIVERY SYSTEM

RAW WATER PIPELINE S1 S3 and S4A

Contract No. xxxxxxxx

****

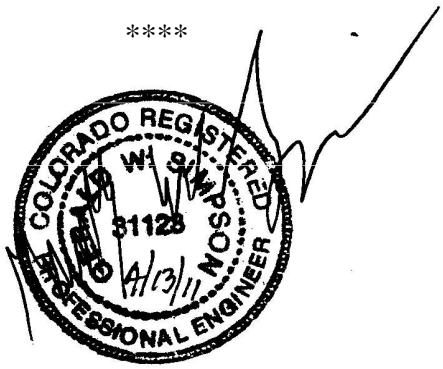

****

The Technical Specifications presented herein were prepared under the direction of the Engineer above for the following purposes only:

- **Colorado Springs Utilities' purchase of the valves as described herein**

It is the responsibility of the Final Design Engineer of Record to prepare and take responsible charge of the final design drawings and specifications that incorporate materials procured by Colorado Springs Utilities under these specifications, including the correct selection of valves.

CH2M HILL

Colorado Springs, CO

April 2011

Project No. 171473.20.S1 Copy No. _____

CONTENTS

Pages

SPECIFICATIONS (VOLUME 1 OF 1)

DIVISION 01—GENERAL REQUIREMENTS

DIVISION 02 THROUGH 39 (NOT USED)

DIVISION 40—PROCESS INTEGRATION

DIVISION 41 THROUGH 49 (NOT USED)

END OF SECTION

SECTION 01 11 00
SUMMARY OF WORK

PART 1 GENERAL

1.01 WORK COVERED BY CONTRACT DOCUMENTS

A. General: The Summary of Work is a brief description of the Work to be provided by the SUPPLIER.

B. The completed Work will provide UTILITIES with Vent-O-Mat Automatic Valves according to the following schedule. Work includes furnishing and delivery of valves to location specified in the Contract Documents, preparation of submittal and operation and maintenance data, and manufacturer's field services and certifications following valve installation as provided in a separate contract between UTILITIES and the CONSTRUCTION CONTRACTOR.

Valve	Contract		
	Segment S1	Segment S3	Segment S4A
6-inch Class 350 CARV	2		
8-inch Class 175 CARV		2	2
8-inch Class 175 Surge CARV		2	
8-inch Class 350 CARV	4		
10-inch Class 175 CARV		3	6
10-inch Class 175 Surge CARV			4
12-inch Class 175 Surge CARV		3	6
12-inch Class 175 CARV		8	11
12-inch Class 325 CARV	4		
12-inch Class 350 CARV	2		

1.02 WORK NOT COVERED BY CONTRACT DOCUMENTS

A. Installation of valves.

PART 2 PRODUCTS (NOT USED)

PART 3 EXECUTION (NOT USED)

END OF SECTION

SECTION 01 22 13
UNIT PRICE MEASUREMENT AND PAYMENT

PART 1 GENERAL

A. Item Descriptions: Item descriptions are provided below for the items listed in Payment Schedule. The price bid for each item shall cover costs in connection with the Work, including furnishing labor, materials, equipment, supplies, and appurtenances; providing construction plant equipment and tools; performing necessary labor and supervision to provide the items as described and specified in the Contract Documents; and overhead and profit. Related work not specifically identified in the item descriptions is considered incidental and a subsidiary obligation of the SUPPLIER and costs in connection therewith shall be included in the price bid for work items. Typical incidental items may include, but are not limited to, administration, communications, and coordination with UTILITIES, CONSTRUCTION MANAGER, CONSTRUCTION CONTRACTORS and ENGINEER for three (3) construction contracts, and quality control.

No.	Item	Description	Payment
S1-1	6-inch Class 350 CARV (EA)	Unit Price bid includes costs for furnishing and delivering 6-inch Class 350 CARV to specified location, including manufacturer's specified field services.	Payment will be based on the number of 6-inch Class 350 CARVs delivered to location specified.
S1-2	8-inch Class 350 CARV (EA)	Unit Price bid includes costs for furnishing and delivering 8-inch Class 350 CARV to specified location, including manufacturer's specified field services.	Payment will be based on the number of 8-inch Class 350 CARVs delivered to location specified.
S1-3	12-inch Class 325 CARV (EA)	Unit Price bid includes costs for furnishing and delivering 12-inch Class 325 CARV to specified location, including manufacturer's specified field services.	Payment will be based on the number of 12-inch Class 325 CARVs delivered to location specified.
S1-4	12-inch Class 350 CARV (EA)	Unit Price bid includes costs for furnishing and delivering 12-inch Class 350 CARV to specified location, including manufacturer's specified field services.	Payment will be based on the number of 12-inch Class 350 CARVs delivered to location specified.

No.	Item	Description	Payment
S3-1	8-inch Class 175 CARV	Unit Price bid includes costs for furnishing and delivering 8-inch Class 175 CARV to specified location, including manufacturer's specified field services.	Payment will be based on the number of 8-inch Class 175 CARVs delivered to location specified.
S3-2	8-inch Class 175 Surge CARV	Unit Price bid includes costs for furnishing and delivering 8-inch Class 175 Surge CARV to specified location, including manufacturer's specified field services.	Payment will be based on the number of 8-inch Class 175 Surge CARVs delivered to location specified.
S3-3	10-inch Class 175 CARV	Unit Price bid includes costs for furnishing and delivering 10-inch Class 175 CARV to specified location, including manufacturer's specified field services.	Payment will be based on the number of 10-inch Class 175 CARVs delivered to location specified.
S3-4	12-inch Class 175 Surge CARV	Unit Price bid includes costs for furnishing and delivering 12-inch Class 175 Surge CARV to specified location, including manufacturer's specified field services.	Payment will be based on the number of 12-inch Class 175 Surge CARVs delivered to location specified.
S3-5	12-inch Class 175 CARV	Unit Price bid includes costs for furnishing and delivering 12-inch Class 175 CARV to specified location, including manufacturer's specified field services.	Payment will be based on the number of 12-inch Class 175 CARVs delivered to location specified.
S4A-1	8-inch Class 175 CARV	Unit Price bid includes costs for furnishing and delivering 8-inch Class 175 CARV to specified location, including manufacturer's specified field services.	Payment will be based on the number of 8-inch Class 175 CARVs delivered to location specified.

No.	Item	Description	Payment
S4A-2	10-inch Class 175 CARV	Unit Price bid includes costs for furnishing and delivering 10-inch Class 175 CARV to specified location, including manufacturer's specified field services.	Payment will be based on the number of 10-inch Class 175 CARVs delivered to location specified.
S4A-3	10-inch Class 175 Surge CARV	Unit Price bid includes costs for furnishing and delivering 10-inch Class 175 Surge CARV to specified location, including manufacturer's specified field services.	Payment will be based on the number of 10-inch Class 175 Surge CARVs delivered to location specified.
S4A-4	12-inch Class 175 Surge CARV	Unit Price bid includes costs for furnishing and delivering 12-inch Class 175 Surge CARV to specified location, including manufacturer's specified field services.	Payment will be based on the number of 12-inch Class 175 Surge CARVs delivered to location specified.
S4A-5	12-inch Class 175 CARV	Unit Price bid includes costs for furnishing and delivering 12-inch Class 175 CARV to specified location, including manufacturer's specified field services.	Payment will be based on the number of 12-inch Class 175 CARVs delivered to location specified.

PART 2 PRODUCTS (NOT USED)

PART 3 EXECUTION (NOT USED)

END OF SECTION

SECTION 01 33 00
SUBMITTAL PROCEDURES

PART 1 GENERAL

1.01 SUMMARY

A. This Section includes administrative and procedural requirements for submitting Shop Drawings, Product Data, Samples, and other submittals.

1.02 DEFINITIONS

A. Action Submittals: Written and graphic information that requires CONSTRUCTION MANAGER's responsive action.

B. Informational Submittals: Written information that does not require CONSTRUCTION MANAGER's responsive action. Submittals may be rejected for not complying with requirements.

1.03 SUBMITTAL PROCEDURES

A. Contract Manager System: To expedite the transmittal and review of Submittal data, the CONSTRUCTION MANAGER has established a web-based "Contract Manager" System as the contract administration and document control software on the Project. Use this system to transmit documents and track the submittals, RFIs and overall Project communication. Use the "Contract Manager" System for submittal data that can be easily transmitted electronically.

B. Forms: The preferred forms for submittals are as developed by the CONSTRUCTION MANAGER or resident in the "Contract Manager". Obtain consent of the CONSTRUCTION MANAGER prior to using other forms. The following list of forms may be used but the list is not necessarily inclusive:

1. CM – 307, Memorandum of Delay.
2. CM – 432, System Outage Request.
3. CM – 503, Request for Shutdown.
4. CM – 1004, Request for Adjustment of Retainage.
5. CM – 1005, Consent of Surety for Reduction of Partial Release of Retainage.
6. CM – 1006, Consent of Surety for Final Payment.
7. CM – 1007, Affidavit of Payment.
8. CM – 1202, CONTRACTOR's Certification of Completion.
9. CM – 1301, Partial Waiver of Lien.
10. CM – 1302, Final Waiver of Lien.
11. CM – 1303, Affidavit of Release of Lien.

C. Coordination: Coordinate preparation and processing of submittals with performance of construction activities.

1. Coordinate each submittal with fabrication, purchasing, testing, delivery, other submittals, and related activities that require sequential activity.
2. Coordinate transmittal of different types of submittals for related parts of the Work so processing will not be delayed because of need to review submittals concurrently for coordination.
   a. CONSTRUCTION MANAGER reserves the right to withhold action on a submittal requiring coordination with other submittals until related submittals are received.

D. Within 7 days after the date of commencement as stated in the Notice to Proceed, submit the following items for review:

1. A preliminary schedule of Shop Drawings, Samples, and proposed Substitutes ("Or-Equal") submittals as required in the Contract Documents.

E. Processing Time: Allow enough time for submittal review, including time for resubmittals, as follows. Time for review commences on CONSTRUCTION MANAGER's receipt of submittal. No extension of the Contract Time will be authorized because of failure to transmit submittals enough in advance of the Work to permit processing, including resubmittals.

1. Initial Review: Allow 15 working days for initial review of each submittal. Allow additional time if coordination with subsequent submittals is required. CONSTRUCTION MANAGER will advise when a submittal being processed must be delayed for coordination. It is considered reasonable that a complete and acceptable submittal is made to the CONSTRUCTION MANAGER by the first resubmittal on an item. UTILITIES reserves the right to withhold monies to cover additional costs of the CONSTRUCTION MANAGER's review beyond the first resubmittal. The CONSTRUCTION MANAGER's maximum review period for each submittal or resubmittal will be 15 working days.
2. Intermediate Review: If intermediate submittal is necessary, process it in same manner as initial submittal.
3. Resubmittal Review: Allow 15 working days for review of each resubmittal.

F. Identification: Place a permanent label or title block on each submittal for identification.

1. Indicate name of firm or entity that prepared each submittal on label or title block.

2. Provide a space approximately 6 by 8 inches on label or beside title block to record review and approval markings and action taken by CONSTRUCTION MANAGER and/or ENGINEER.
3. Include the following information on label for processing and recording action taken:
   a. Project name.
   b. Date.
   c. Name and address of CONSTRUCTION MANAGER and ENGINEER.
   d. Name and address of SUPPLIER.
   e. Name and address of subcontractor.
   f. Name and address of supplier.
   g. Name of manufacturer.
   h. Submittal number or other unique identifier, including revision identifier.
      1) Use the Specification Section number followed by a decimal point and then a sequential number (e.g., 061000.01) for the submittal number. Resubmittals include an alphabetic suffix after another decimal point (e.g., 061000.01.A).
   i. Number and title of appropriate Specification Section.
   j. Drawing number and detail references, as appropriate.
   k. Location(s) where product is to be installed, as appropriate.
   l. Other necessary identification.

G. Deviations: Highlight, encircle, or otherwise specifically identify deviations from the Contract Documents on submittals.

H. Additional Copies: Unless additional copies are required for final submittal, and unless CONSTRUCTION MANAGER and/or ENGINEER observes noncompliance with provisions in the Contract Documents, initial submittal may serve as final submittal.

   1. Additional copies submitted for maintenance manuals will not be marked with action taken and will be returned.

I. Transmittal: Package each submittal individually and appropriately for transmittal and handling. Include the CONSTRUCTION MANAGER's standard submittal transmittal form, a reproducible copy of which is available from the CONSTRUCTION MANAGER, with each transmitted submittal. Submittals without the form or where applicable items on the form are not completed will be returned for resubmittal. CONSTRUCTION MANAGER will discard submittals received from sources other than SUPPLIER.

   1. Organization:
      a. Use a single submittal transmittal form for each technical specification section or item or class of material or equipment for which a submittal is required. A single submittal covering

multiple sections will not be acceptable, unless the primary specification references other sections for components.

b. On the transmittal form, index the components of the submittal and insert tabs in the submittal to match the components. Relate the submittal components to specification paragraph and subparagraph, Drawing number, detail number, schedule title or room number as applicable.

c. Unless indicated otherwise, match terminology and equipment names and numbers used in submittals with those used in the Contract Documents.

d. Disorganized submittals will be returned without review.

J. Resubmittals: Make resubmittals in same form and number of copies as initial submittal.

1. Note date and content of previous submittal.
2. Note date and content of revision in label or title block and clearly indicate extent of revision.
3. Resubmit submittals until they are marked “Reviewed with CONSTRUCTION MANAGER and/or ENGINEER’s action stamp”.

K. Distribution: Furnish copies of final submittals to manufacturers, subcontractors, suppliers, fabricators, installers, authorities having jurisdiction, and others as necessary for performance of construction activities. Show distribution on transmittal forms.

1. Use for Construction: Use only final submittals with mark indicating “Reviewed with CONSTRUCTION MANAGER and/or ENGINEER’S action stamp” taken by CONSTRUCTION MANAGER and/or ENGINEER.

1.04 CONTRACTOR'S USE OF ENGINEER'S CAD FILES

A. General: ENGINEER's CAD files will not be provided for use in connection with Project.

PART 2 PRODUCTS

2.01 ACTION SUBMITTALS

A. General: Prepare and submit Action Submittals required by individual Specification Sections.

B. Product Data: Collect information into a single submittal for each element of construction and type of product or equipment.

1. If information must be specially prepared for submittal because standard printed data are not suitable for use, submit as Shop Drawings, not as Product Data.
2. Mark each copy of each submittal to show which products and options are applicable.
3. Include the following information, as applicable:
   a. Manufacturer's written recommendations.
   b. Manufacturer's product specifications.
   c. Manufacturer's installation instructions.
   d. Manufacturer's catalog cuts.
   e. Printed performance curves.
   f. Operational range diagrams.
   g. Compliance with specified referenced standards.
   h. Testing by recognized testing agency.
4. Number of Copies: Submit five copies of Product Data, unless otherwise indicated. Provide one additional copy for submittals requiring review by a consultant. CONSTRUCTION MANAGER will return two (2) copies. Mark up and retain one returned copy as a Project Record Document.

C. Shop Drawings: Wherever called for in the Contract Documents or where required by the CONSTRUCTION MANAGER, furnish a Shop Drawing submittal. Shop Drawings may include detail design calculations, shop-prepared drawings, fabrication and installation drawings, erection drawings, lists, graphs, catalog sheets, data sheets, and similar items. Include the signature and seal of an engineer registered in the appropriate branch in the State of Colorado, unless otherwise indicated, whenever design calculations are required to be submitted as part of a submittal. Prepare Project-specific information, drawn accurately to scale. Do not base Shop Drawings on reproductions of the Contract Documents or standard printed data.

1. Preparation: Fully illustrate requirements in the Contract Documents. Include the following information, as applicable:
   a. Dimensions.
   b. Identification of products.
   c. Fabrication and installation drawings.
   d. Shop work manufacturing instructions.
   e. Templates and patterns.
   f. Schedules.
   g. Notation of coordination requirements.
   h. Notation of dimensions established by field measurement.
   i. Relationship to adjoining construction clearly indicated.
   j. Seal and signature of professional engineer if specified.
2. Transmittal Form: Include the CONSTRUCTION MANAGER's standard submittal transmittal form, a reproducible copy of which is available from the CONSTRUCTION MANAGER, with Shop Drawing

submittals. A submittal without the form or where applicable items on the form are not completed will be returned for resubmittal.

3. Sheet Size: Except for templates, patterns, and similar full-size drawings, submit Shop Drawings on sheets at least 8-1/2 by 11 inches but no larger than 36 by 48 inches.
4. Number of Copies: Submit one original plus six hard copies and one electronic copy ("PDF" format) of each submittal. CONSTRUCTION MANAGER will return a transcribed copy in non-editable electronic format.
5. Collate and bind: Number every page in a submittal in sequence. Collate and staple or bound, as appropriate each copy of a submittal. The CONSTRUCTION MANAGER will not collate sheets or copies.

D. Product Schedule or List: As required in individual Specification Sections, prepare a written summary indicating types of products required for the Work and their intended location.

1. Number of Copies: Submit four (4) copies of product schedule or list, unless otherwise indicated. CONSTRUCTION MANAGER will return one copy.

2.02 INFORMATIONAL SUBMITTALS

A. General: Prepare and submit Informational Submittals required by other Specification Sections.

1. Number of Copies: Three copies of each submittal, unless otherwise indicated. CONSTRUCTION MANAGER will not return copies.
2. Certificates and Certifications: Provide a notarized statement that includes signature of entity responsible for preparing certification. Include the signature of an officer or other individual authorized to sign documents on behalf of that entity for certificates and certifications.

PART 3 EXECUTION

3.01 SUPPLIER'S REVIEW

A. Review each submittal and check for coordination with other Work of the Contract and for compliance with the Contract Documents. Note corrections and field dimensions. Mark with approval stamp before submitting to CONSTRUCTION MANAGER.

B. Approval Stamp: Stamp each submittal with a uniform, approval stamp. Include Project name and location, submittal number, Specification Section title and number, name of reviewer, date of CONTRACTOR's approval, and statement certifying that submittal has been reviewed, checked, and approved for compliance with the Contract Documents.

3.02 CONSTRUCTION MANAGER'S ACTION

A. General: CONSTRUCTION MANAGER will not receive submittals that do not bear CONTRACTOR's approval stamp and will return them without action.

B. Action Submittals: CONSTRUCTION MANAGER will receive each submittal and forward to appropriate entity to make marks to indicate corrections or modifications required, and return it. CONSTRUCTION MANAGER will stamp each submittal when received. Reviewing entity will stamp each submittal with an action stamp and will mark stamp appropriately to indicate action taken, as follows:

1. NO EXCEPTIONS TAKEN: If a submittal is returned marked "NO EXCEPTIONS TAKEN," formal revision and resubmission will not be required.
2. MAKE CORRECTIONS NOTED: If a submittal is returned marked "MAKE CORRECTIONS NOTED," make the corrections on the submittal, but formal revision and resubmission will not be required.
3. AMEND AND RESUBMIT: If a submittal is returned marked "AMEND AND RESUBMIT," revise it and resubmit the required number of copies. Resubmittal of portions of multi-page or multi-drawing submittals will **not** be allowed. For example, if a Shop Drawing submittal consisting of 10 drawings contains one drawing noted as "AMEND AND RESUBMIT," the submittal as a whole is deemed "AMEND AND RESUBMIT" and all 10 drawings are required to be resubmitted.
4. REJECTED – SEE REMARKS: If a submittal is returned marked "REJECTED – SEE REMARKS," means either that the proposed material or product does not satisfy the specification, the submittal is so incomplete that it cannot be reviewed, or is a substitution request not submitted in accordance with the Contract Documents. Prepare a new submittal that is in conformance with the Contract Documents and submit the required number of copies for review.

C. Fabrication of an item may commence only after the CONSTRUCTION MANAGER has returned the pertinent submittals marked either "NO EXCEPTIONS TAKEN" or "MAKE CORRECTIONS NOTED." Corrections indicated on submittals are considered as changes necessary to meet the requirements of the Contract Documents and not as changes to the contract requirements.

D. Review submittals prior to submission to the CONSTRUCTION MANAGER. Sign and date each submittal as being correct and in strict conformance with the Contract Documents. In the case of Shop Drawings, date and sign each sheet. Note deviations from the Contract Documents on the transmittal sheet. The CONSTRUCTION MANAGER will only receive submittals that have

been so verified. Non-verified submittals will be returned without action taken.

E. Corrections or comments made on the CONTRACTOR's Shop Drawings during review do not relieve the CONTRACTOR from compliance with Contract Drawings and Specifications. Review is for conformance to the program, design concept and general compliance with the Contract Documents only. The CONTRACTOR is responsible for confirming and correlating all dimensions and quantities, fabrication processes and techniques, coordinating the Work of all trades, satisfactory and safe performance of the Work, and the quality, means, and methods of construction.

F. Informational Submittals: CONSTRUCTION MANAGER will review each submittal and will not return it, or will return it if it does not comply with requirements. CONSTRUCTION MANAGER will forward each submittal to appropriate party.

G. Partial submittals are not acceptable, will be considered non-responsive, and will be returned without review.

H. Submittals not required by the Contract Documents may not be reviewed and may be discarded.

END OF SECTION

SECTION 01 43 33
MANUFACTURERS' FIELD SERVICES

PART 1 GENERAL

1.01 DEFINITIONS

A. Person-Day: One person for 8 hours within regular working hours.

1.02 QUALIFICATION OF MANUFACTURER'S REPRESENTATIVE

A. Authorized representative of the manufacturer, factory trained, and experienced in the technical applications, installation, operation, and maintenance with full authority by the manufacturer to issue the certifications required of the manufacturer. Additional qualifications may be specified elsewhere.

B. Representative subject to acceptance by CONSTRUCTION MANAGER. No substitute representatives will be allowed unless prior written approval by such has been given.

PART 2 PRODUCTS (NOT USED)

PART 3 EXECUTION

3.01 FULFILLMENT OF SPECIFIED MINIMUM SERVICES

A. Furnish manufacturers' services when required by an individual specification section, to meet the requirements of this Section.

B. Where time is necessary in excess of that stated in the Specifications for manufacturers' services, or when a minimum time is not specified, the time required to perform the specified services will be considered incidental.

C. Schedule manufacturer' services to avoid conflict with other onsite testing or other manufacturers' onsite services.

D. Determine, before scheduling services, that conditions necessary to allow successful testing have been met.

E. Only those days of service approved by CONSTRUCTION MANAGER will be credited to fulfill the specified minimum services.

F. When specified in individual specification sections, manufacturer's onsite services shall include:

1. Assistance during product (system, subsystem, or component) installation to include observation, guidance, instruction of CONTRACTOR's assembly, erection, installation or application procedures.
2. Inspection, checking, and adjustment as required for product (system, subsystem, or component) to function as warranted by manufacturer.
3. Providing, on a daily basis, copies of manufacturers' representatives field notes and data to CONSTRUCTION MANAGER.
4. Revisiting the Site as required to correct problems and until installation and operation are acceptable to CONSTRUCTION MANAGER.
5. Resolution of assembly or installation problems attributable to, or associated with, respective manufacturer's products and systems.
6. Additional requirements may be specified elsewhere.

3.02 MANUFACTURER'S CERTIFICATE OF COMPLIANCE

A. When specified in individual Specification section, submit prior to shipment of product or material.

3.03 MANUFACTURER'S CERTIFICATE OF PROPER INSTALLATION

A. When so specified, a Manufacturer's Certificate of Proper Installation form, a copy of which is attached to this section, shall be completed and signed by the equipment manufacturer's representative.

B. Such form shall certify that the signing party is a duly authorized representative of the manufacturer, is empowered by the manufacturer to inspect, approve, and operate their equipment and is authorized to make recommendations required to assure that the equipment is complete and operational.

3.04 SUPPLEMENTS

A. The supplements listed below, following "End of Section," are part of this Specification.

1. Forms: Manufacturer's Certificate of Proper Installation.

END OF SECTION

MANUFACTURER'S CERTIFICATE OF COMPLIANCE

OWNER: _____

PROJECT NAME: _____

PROJECT NO: _____

PRODUCT, MATERIAL, OR SERVICE SUBMITTED: _____

Comments: _____

_____

_____

_____

_____

_____

I hereby certify that the above-referenced product, material, or service called for by the Contract for the named Project will be furnished in accordance with all applicable requirements. I further certify that the product, material, or service are of the quality specified and conform in all respects with the Contract requirements, and are in the quantity shown.

Date of Execution: _____, 20___

Manufacturer:

Manufacturer's Authorized Representative *(print)*: _____

_____

(Authorized Signature)

MANUFACTURER'S CERTIFICATE OF PROPER INSTALLATION

OWNER _____ EQPT SERIAL NO: _____

EQPT TAG NO: _____ EQPT/SYSTEM: _____

PROJECT NO: _____ SPEC. SECTION: _____

I hereby certify that the above-referenced equipment/system has been:

(Check Applicable)

- ☐ Installed in accordance with Manufacturer's recommendations.
- ☐ Inspected, checked, and adjusted.
- ☐ Serviced with proper initial lubricants.
- ☐ Electrical and mechanical connections meet quality and safety standards.
- ☐ All applicable safety equipment has been properly installed.
- ☐ Functional tests.
- ☐ System has been performance tested, and meets or exceeds specified performance requirements. (When complete system of one manufacturer)

Note: Attach any performance test documentation from manufacturer.

Comments: _____

_____

_____

_____

I, the undersigned Manufacturer's Representative, hereby certify that I am (i) a duly authorized representative of the manufacturer, (ii) empowered by the manufacturer to inspect, approve, and operate their equipment and (iii) authorized to make recommendations required to ensure equipment furnished by the manufacturer is complete and operational, except as may be otherwise indicated herein. I further certify that all information contained herein is true and accurate.

Date: _____, 20___

Manufacturer:_____

By Manufacturer's Authorized Representative: _____

(Authorized Signature)

SECTION 01 77 00
CLOSEOUT PROCEDURES

PART 1 GENERAL

1.01 SUBMITTALS

A. Informational Submittals:

1. Submit with application for final payment.
   a. Special bonds, Special Guarantees, and Service Agreements.
   b. Consent of Surety to Final Payment: As required in General Conditions.
   c. Releases or Waivers of Liens and Claims: As required in General Conditions.
   d. Final Application for Payment.
   e. Extra Materials: As required by individual Specification sections.

PART 2 PRODUCTS (NOT USED)

PART 3 EXECUTION (NOT USED)

END OF SECTION

SECTION 01 78 23
OPERATION AND MAINTENANCE DATA

PART 1 GENERAL

1.01 SECTION INCLUDES

A. Information for the preparation, submission, and review of Operations and Maintenance (O&M) Data, as required by individual Specification sections.

1.02 DEFINITIONS

A. Preliminary Data: Initial and subsequent submissions to CONSTRUCTION MANAGER for ENGINEER's review.

B. Final Data: ENGINEER-accepted data, submitted as specified herein.

C. Maintenance Operation: As used on Maintenance Summary Form is defined to mean any routine operation required to ensure satisfactory performance and longevity of equipment. Examples of typical maintenance operations are lubrication, belt tensioning, adjustment of pump packing glands, and routine adjustments.

1.03 SEQUENCING AND SCHEDULING

A. Equipment and System Data:

1. Provide manuals for equipment and systems prepared by equipment manufacturer or system Supplier.
2. Preliminary Data:
   a. Do not submit until Shop Drawing for equipment or system has been reviewed and approved by ENGINEER.
   b. Submit prior to shipment date. Include copies of warranties, bonds, and service agreements if specified.
3. Final Data: Submit Instructional Manual Formatted data not more than 90 days after notice to proceed.

1.04 DATA FORMAT

A. Prepare preliminary data in the form of an instructional manual. Prepare final data in data compilation format on electronic media.

B. Instructional Manual Format:

1. Binder: Commercial quality, permanent, three-ring or three-post binders with durable plastic cover.
2. Size: 8-1/2 inches by 11 inches, minimum.

3. Cover: Identify manual with typed or printed title "OPERATION AND MAINTENANCE DATA, VOLUME NO. ____ OF ____," and list:
   a. Project title.
   b. Designate applicable system, equipment, material, or finish.
   c. Identity of separate structure as applicable.
   d. Identity of general subject matter covered in manual. Identity of equipment number and Specification section.
4. Title Page:
   a. SUPPLIER name, address, and telephone number.
      1) Provide name and telephone number of local source of supply for parts and replacement.
5. Table of Contents:
   a. Neatly typewritten and arranged in systematic order with consecutive page numbers.
   b. Identify each product by product name and other identifying numbers or symbols as set forth in Contract Documents.
6. Paper: 20-pound minimum, white for typed pages.
7. Text: Manufacturer's printed data, or neatly typewritten.
8. Three-hole punch data for binding and composition; arrange printing so that punched holes do not obliterate data.
9. Provide material suitable for reproduction, with quality equal to original. Photocopying of material will be acceptable, except for material containing photographs.

C. Electronic Media Format:

1. Portable Document Format (PDF):
   a. After preliminary data has been found to be acceptable to ENGINEER, submit Operation and Maintenance data in PDF format on CD.
   b. Files to be exact duplicates of ENGINEER-accepted preliminary data. Arrange by specification number and name.
   c. Files to be fully functional and viewable in most recent version of Adobe Acrobat.

1.05 SUBMITTALS

A. Informational:

1. Data Outline: Submit two copies to CONSTRUCTION MANAGER of a detailed outline of proposed organization and contents of Final Data prior to preparation of Preliminary Data.
2. Preliminary Data:
   a. Submit five copies to CONSTRUCTION MANAGER for ENGINEER's review.

b. If data meets conditions of the Contract:
   1) One copy will be retained by UTILITIES.
   2) One copy will be retained by SUPPLIER.
   3) Two copies will be retained by CONSTRUCTION MANAGER.
   4) One copy will be retained in ENGINEER's file.
c. If data does not meet conditions of the Contract, copies will be returned to CONSTRUCTION MANAGER and distributed as follows:
   1) Copies will be returned to SUPPLIER with ENGINEER's comments (on separate document) for revision.
   2) ENGINEER's comments will be retained in ENGINEER's file.
   3) Resubmit five copies revised in accordance with ENGINEER's comments.

3. Final Data: Submit three copies to CONSTRUCTION MANAGER in format specified herein.

1.06 DATA FOR EQUIPMENT AND SYSTEMS

A. Content For Each Unit (or Common Units) and System:

1. Product Data:
   a. Include only those sheets that are pertinent to specific product.
   b. Clearly annotate each sheet to:
      1) Identify specific product or part installed.
      2) Identify data applicable to installation.
      3) Delete references to inapplicable information.
   c. Function, normal operating characteristics, and limiting conditions.
   d. Performance data, engineering data, nameplate data, and tests.
   e. Complete nomenclature and commercial number of replaceable parts.
   f. Original manufacturer's parts list, illustrations, detailed assembly drawings showing each part with part numbers and sequentially numbered parts list, and diagrams required for maintenance.
   g. Spare parts ordering instructions.
2. Drawings: Supplement product data with Drawings as necessary to clearly illustrate:
   a. Format:
      1) Provide reinforced, punched, binder tab; bind in with text.
      2) Reduced to 8-1/2 inches by 11 inches, or 11 inches by 17 inches folded to 8-1/2 inches by 11 inches.

3) Where reduction is impractical, fold and place in 8-1/2-inch by 11-inch envelopes bound in text.
4) Identify Specification section and product on Drawings and envelopes.

b. Relations of component parts of equipment and systems.

3. Instructions and Procedures: Within text, as required to supplement product data.
   a. Format:
      1) Organize in consistent format under separate heading for each different procedure.
      2) Provide logical sequence of instructions for each procedure.
      3) Provide information sheet for UTILITIES' personnel, including:
         a) Proper procedures in event of failure.
         b) Instances that might affect validity of guarantee or Bond.
   b. Installation Instructions: Including alignment, adjusting, calibrating, and checking.
   c. Operating Procedures:
      1) Startup, break-in, routine, and normal operating instructions.
      2) Safety precautions.
      3) Special operating instructions.
   d. Maintenance and Overhaul Procedures:
      1) Routine maintenance.
      2) Guide to troubleshooting.
      3) Disassembly, removal, repair, reinstallation, and re-assembly.
4. Guarantee, Bond, and Service Agreement: Within text, as required to supplement product data.

B. Maintenance Summary:

1. Compile individual Maintenance Summary for each applicable equipment item, respective unit or system, and for components or sub-units.
2. Format:
   a. Use Maintenance Summary Form bound with this section or electronic facsimile of such.
   b. Each Maintenance Summary may take as many pages as required.
   c. Use only 8-1/2-inch by 11-inch size paper.
   d. Complete using typewriter or electronic printing.
3. Include detailed lubrication instructions and diagrams showing points to be greased or oiled; recommend type, grade, and temperature range of lubricants and frequency of lubrication.
4. Recommended Spare Parts:
   a. Data to be consistent with manufacturer's Bill of Materials/Parts List furnished in O&M manuals.

b. “Unit” is the unit of measure for ordering the part.
c. “Quantity” is the number of units recommended.
d. “Unit Cost” is the current purchase price.

1.01 MATERIAL SAFETY DATA SHEETS (MSDS)

A. Provide MSDSs for chemicals that will become part of SDS and chemicals required for future maintenance.

1.02 SUPPLEMENTS

A. The supplements listed below, following “End of Section,” are part of this Specification.

1. Forms: Maintenance Summary Form.

PART 2 PRODUCTS (NOT USED)

PART 3 EXECUTION (NOT USED)

END OF SECTION

MAINTENANCE SUMMARY FORM

PROJECT:_____ CONTRACT NO.:_____

1. EQUIPMENT ITEM_____

2. MANUFACTURER _____

3. EQUIPMENT/TAG NUMBER(S) _____

4. WEIGHT OF INDIVIDUAL COMPONENTS (OVER 100 POUNDS)_____

5. NAMEPLATE DATA (hp, voltage, speed, etc.) _____

6. MANUFACTURER'S LOCAL REPRESENTATIVE _____

   a. Name_____ Telephone No. _____

   b. Address _____

7. MAINTENANCE REQUIREMENTS

Maintenance Operation Comments	**Frequency**	**Lubricant (If Applicable)**
List briefly each maintenance operation required and refer to specific information in manufacturer's standard maintenance manual, if applicable. (Reference to manufacturer's catalog or sales literature is not acceptable.)	List required frequency of each maintenance operation.	Refer by symbol to lubricant required.

8. LUBRICANT LIST

Reference Symbol	Shell	Exxon Mobile	Chevron Texaco	BP Amoco	Or Equal
List symbols used in No. 7 above.	List equivalent lubricants, as distributed by each manufacturer for the specific use recommended.				

9. RECOMMENDED SPARE PARTS FOR OWNER'S INVENTORY.

Part No.	Description	Unit	Quantity	Unit Cost
Note: Identify parts provided by this Contract with two asterisks.				

SECTION 40 27 02
AUTOMATIC VALVES

PART 1 GENERAL

1.01 SCOPE OF WORK

A. Colorado Springs Utilities Water Line Extension and Service Standards are incorporated by reference.

B. Materials and methods specifically referenced in this section supersede those published by Colorado Springs Utilities.

1.02 DESCRIPTION OF SYSTEM

A. General: The equipment and materials specified are intended to be standard equipment of proven ability for use in controlling the flow of raw water under pressure for transmission pipelines.

B. This section includes materials and testing of valves.

1.03 REFERENCES

A. The following is a list of standards that may be referenced in this section:

1. American National Standards Institute (ANSI): B16.1, Cast Iron Pipe Flanges and Flanged Fittings.
2. American Society of Mechanical Engineers (ASME): Section VIII, Boiler and Pressure Vessel Code—Section VIII—Pressure Vessels.
3. American Water Works Association (AWWA):
   a. C111/A21.11, Rubber-Gasket Joints for Ductile-Iron Pressure Pipe and Fittings.
   b. C207, Steel Pipe Flanges for Waterworks Service.
   c. C500, Metal-Seated Gate Valves for Water Supply Service.
   d. C504, Rubber-Seated Butterfly Valves.
   e. C509, Resilient-Seated Gate Valves for Water Supply Service.
   f. C510, Double Check Valve, Backflow Prevention Assembly.
   g. C540, Power-Actuating Devices for Valves and Sluice Gates.
   h. C550, Protective Epoxy Interior Coatings for Valves and Hydrants.
   i. C800, Underground Service Line Valves and Fittings.
4. ASTM International (ASTM):
   a. A276, Standard Specification for Stainless Steel Bars and Shapes.
   b. A351/A351M, Standard Specification for Castings, Austenitic, Austenitic-Ferric (Duplex), for Pressure-Containing Parts.
   c. A536, Standard Specification for Ductile Iron Castings.

d. A564/A564M, Standard Specification for Hot-Rolled and Cold-Finished Age-Hardening Stainless Steel Bars and Shapes.
e. A565, Standard Specification for Martensitic Stainless Steel Bars for High-Temperature Service.
f. B61, Standard Specification for Steam or Valve Bronze Castings.
g. B62, Standard Specification for Composition Bronze or Ounce Metal Castings.
h. B98/B98M, Standard Specification for Copper-Silicon Alloy Rod, Bar, and Shapes.
i. B127, Standard Specification for Nickel-Copper Alloy (UNS N04400) Plate, Sheet, and Strip.
j. B139, Standard Specification for Phosphor Bronze Rod, Bar and Shapes.
k. B164, Standard Specification for Nickel-Copper Alloy Rod, Bar, and Wire.
l. B194, Standard Specification for Copper-Beryllium Alloy Plate, Sheet, Strip, and Rolled Bar.
m. B584, Standard Specification for Copper Alloy Sand Castings for General Applications.
n. D429, Standard Test Methods for Rubber Property-Adhesion to Rigid Substrates.
o. D1784, Standard Specification for Rigid Poly(Vinyl Chloride) (PVC) Compounds and Chlorinated Poly(Vinyl Chloride) (CPVC) Compounds.

5. NSF International (NSF).

1.04 DESIGN REQUIREMENTS

A. Valves:

1. For the purposes of design calculations, the following are defined:
   a. Working Pressure (psi) equals Pressure Class.

1.05 SUBMITTALS

A. Action Submittals:

1. Shop Drawings:
   a. Product data sheets for each model.
   b. Complete catalog information, descriptive literature, specifications, and identification of materials of construction.
   c. Sizing calculations for open-close/throttle and modulating valves.

B. Informational Submittals:

1. Manufacturer's Valve Certificate of Compliance with applicable standards, in accordance with Section 01 43 33, Manufacturers' Field Services.

2. Tests and inspection data.
3. Operation and Maintenance Data as specified in Section 01 78 23, Operation and Maintenance Data.
4. Manufacturer's Certificate of Proper Installation, in accordance with Section 01 43 33, Manufacturers' Field Services.

PART 2 PRODUCTS

2.01 MATERIALS

A. Bronze and brass valve components and accessories that have surfaces in contact with water to be alloys containing less than 16 percent zinc and 2 percent aluminum.

1. Approved alloys are of the following ASTM designations: B61, B62, B98/B98M (Alloy UNS No. C65100, C65500, or C66100), B139 (Alloy UNS No. C51000), B584 (Alloy UNS No. C90300 or C94700), B164, B194, and B127.
2. Stainless steel Alloy 18-8 may be substituted for bronze.

2.02 FACTORY FINISHING

A. Fusion Bonded Epoxy Lining and Coating:

1. Use where specified for individual valves described herein.
2. In accordance with AWWA C550 unless otherwise specified.
3. Minimum 12-mil dry film thickness except where limited by valve operating tolerances.

2.03 VALVES

A. Self-Contained Automatic Valves:

1. Provide Combination Air Release and Vacuum Valves according to the schedule below. There are no "or equal" or substitutions for the named manufacturer allowed:
2. Include optional ¼-inch NPT bleed port for all valves.
3. Flanges for Class 175 shall be raised-face, ASME B16.5 Class 150
4. Flanges for Class 325 and Class 350 shall be raised face, ASME B16.5 Class 300.
5. Provide factory applied fusion bonded epoxy lining and coating to valve top flanges (all models), bottom flanges (Series RBXb) and valve body (RBXc and RBXcb).

6-inch Class 350 CARV	Vent-O-Mat; Model RBX 2531 with stainless steel lower flange assembly
8-inch Class 175 CARV	Vent-O-Mat; Model RBX 1631 with stainless steel lower flange assembly

8-inch Class 175 Surge CARV	Vent-O-Mat; Model RBXb 1631
8-inch Class 350 CARV	Vent-O-Mat; Model RBX 2531 with stainless steel lower flange assembly
10-inch Class 175 CARV	Vent-O-Mat; Model RBXc 1631 with stainless steel top flange to valve body bolts, nuts and washers
10-inch Class 175 Surge CARV	Vent-O-Mat; Model RBXcb 1631 with stainless steel top flange to valve body bolts, nuts and washers and double orifice with bias mechanism
12-inch Class 175 Surge CARV	Vent-O-Mat; Model RBXcb 1631 with stainless steel top flange to valve body bolts, nuts and washers and double orifice with bias mechanism
12-inch Class 175 CARV	Vent-O-Mat; Model RBXc 1631 with stainless steel top flange to valve body bolts, nuts and washers
12-inch Class 325 CARV	Vent-O-Mat; Model RBXc 2531 with stainless steel top flange to valve body bolts, nuts and washers
12-inch Class 350 CARV	Vent-O-Mat; Model RBXc 2531 with stainless steel top flange to valve body bolts, nuts and washers

PART 3 EXECUTION

3.01 MANUFACTURER'S SERVICES

A. Installation and Start-up Assistance

1. The Supplier's authorized factory representative shall visit each CARV site to witness each installation and start-up activity required below.
   a. Inspection of completed installation of each valve: Inspection shall include the verification of proper field alignment and actuator assembly.
      One working day required per CARV site.
   b. Witness start-up and field testing of each valve.
      One working day required per CARV site.
   c. Recommend final field adjustments to ensure that the equipment installation and operation comply with the specified requirements.
      One working day required per CARV site.

2. UTILITIES' anticipates the following CARV sites for each Construction Contract:
   a. Segment S1: Six (6) sites.
   b. Segment S3: eight (8) sites.
   c. Segment S4A: Fourteen (14) sites.
3. The general vicinity of the CARV sites are shown on the attached Vicinity Map following "End of Section." See also statement of work for period of performance.
4. Following successful installation and start-up, the Supplier's authorized factory representative shall provide written certification to the CONSTRUCTION MANAGER stating the requirements and controls have been properly installed, aligned, lubricated, adjusted, and suitable for operation.

3.02 SUPPLEMENTS

A. The supplements listed below, following "End of Section," are part of this Specification.

1. Vicinity Map.

END OF SECTION

FILENAME: PP1_SP201nG30d_171473.dgn PLOT DATE: 4/8/2011

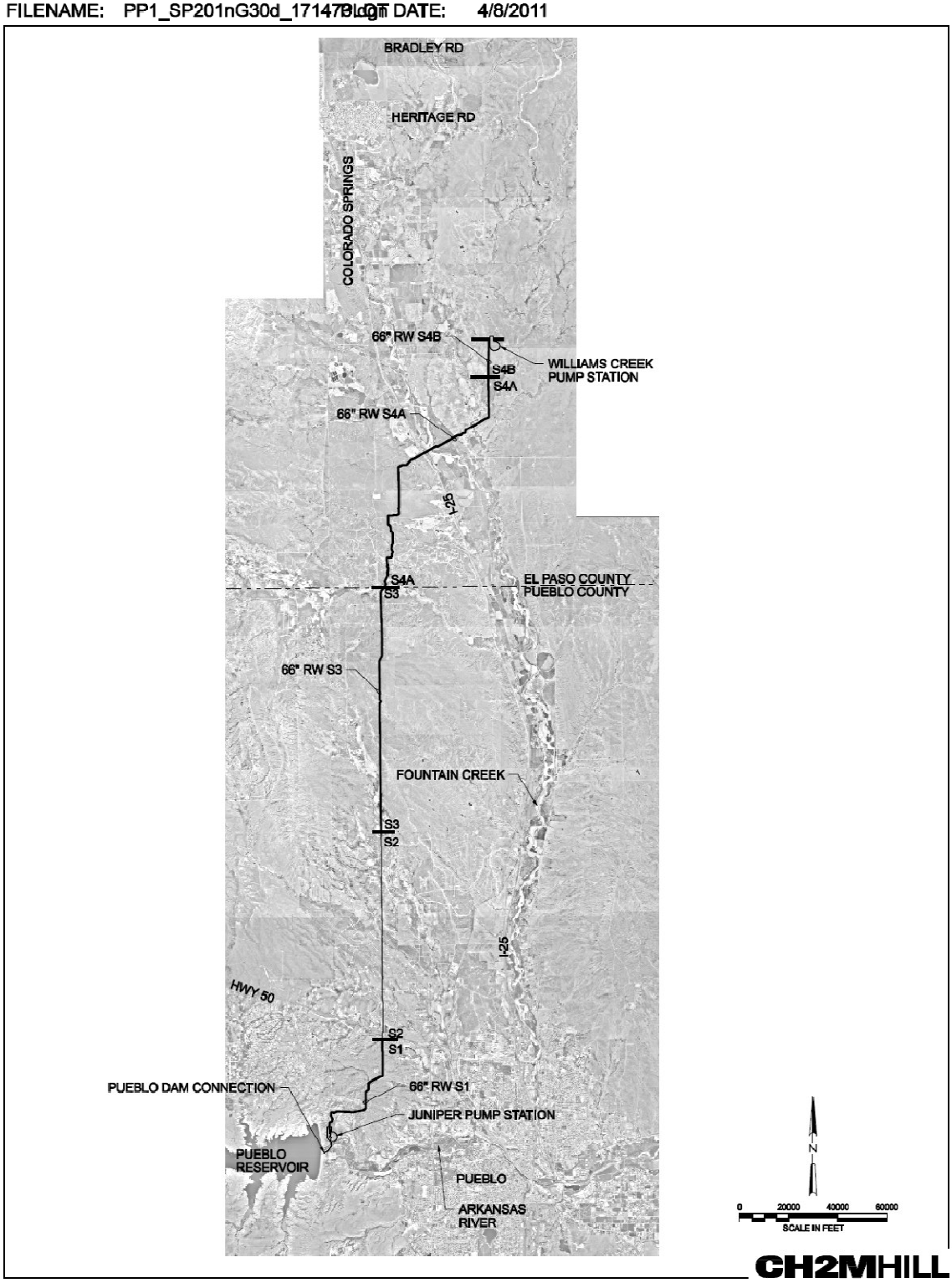

SU Project Number: SDS-002 CSU Work Order Number: 1146977

VICINITY MAP

SUPPLEMENT

Documents for the
Purchase of Vanessa Triple Offset Valves

SOUTHERN DELIVERY SYSTEM
RAW WATER PIPELINE S1, S3 and S4A

VOLUME 1 OF 1

SPECIFICATIONS

April 2011

OWNER'S REPRESENTATIVE

DARLENE GARCIA, P.E.
COLORADO SPRINGS UTILITIES
121 SOUTH TEJON, 3RD FLOOR
COLORADO SPRINGS, CO 80947
PHONE: (719) 668-4097
FAX: (719) 668-8734
E-MAIL: dgarcia@csu.org

ENGINEER'S REPRESENTATIVE

BRUCE J. SPILLER, P.E.
CH2M HILL
90 SOUTH CASCADE AVENUE, SUITE 700
COLORADO SPRINGS, CO 80903
PHONE: (719) 477-4914
FAX: (719) 634-9954
E-MAIL: bspiller@ch2m.com

COLORADO SPRINGS UTILITIES

COLORADO SPRINGS, COLORADO

DOCUMENTS

for the Purchase of Vanessa Triple Offset Valves

SOUTHERN DELIVERY SYSTEM

RAW WATER PIPELINE S1, S3 and S4A

Contract No. xxxxxxxx

****

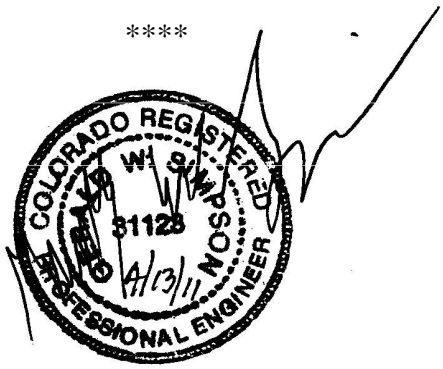

****

The Technical Specifications presented herein were prepared under the direction of the Engineer above for the following purposes only:

- **Colorado Springs Utilities' purchase of the valves as described herein**

It is the responsibility of the Final Design Engineer of Record to prepare and take responsible charge of the final design drawings and specifications that incorporate materials procured by Colorado Springs Utilities under these specifications, including the correct selection of valves.

CH2M HILL

Colorado Springs, CO

April 2011

Project No. 171473.20.S1 Copy No. _____

CONTENTS

END OF SECTION

SECTION 01 11 00
SUMMARY OF WORK

PART 1 GENERAL

1.01 WORK COVERED BY CONTRACT DOCUMENTS

A. General: The Summary of Work is a brief description of the Work to be provided by the SUPPLIER.

B. The completed Work will provide UTILITIES with Vanessa Triple-Offset Butterfly Valves according to the following schedule. Work includes furnishing and delivery of valves to location specified in the Contract Documents, preparation of submittal and operation and maintenance data, and manufacturer's field services and certifications following valve installation as provided in a separate contract between UTILITIES and the CONSTRUCTION CONTRACTOR.

Valve	Contract		
	Segment S1	**Segment S3**	**Segment S4A**
6-inch Class 175 BFV		3	8
6-inch Class 325 BFV	1		
6-inch Class 350 BFV	3		
8-inch Class 175 BFV		3	1
8-inch Class 375 BFV	1		
10-inch Class 175 BFV			1
16-inch Class 175 BFV			2

1.02 WORK NOT COVERED BY CONTRACT DOCUMENTS

A. Installation of valves.

B. Bolt and gasket sets.

PART 2 PRODUCTS (NOT USED)

PART 3 EXECUTION (NOT USED)

END OF SECTION

SECTION 01 22 13
UNIT PRICE MEASUREMENT AND PAYMENT

PART 1 GENERAL

A. Item Descriptions: Item descriptions are provided below for the items listed in Payment Schedule. The price bid for each item shall cover costs in connection with the Work, including furnishing labor, materials, equipment, supplies, and appurtenances; providing construction plant equipment and tools; performing necessary labor and supervision to provide the items as described and specified in the Contract Documents; and overhead and profit. Related work not specifically identified in the item descriptions is considered incidental and a subsidiary obligation of the SUPPLIER and costs in connection therewith shall be included in the price bid for work items. Typical incidental items may include, but are not limited to, administration, communications, and coordination with UTILITIES, CONSTRUCTION MANAGER, CONSTRUCTION CONTRACTORS and ENGINEER for three (3) construction contracts, and quality control.

No.	Item	Description	Payment
S1-1	6-inch Class 325 BFV	Unit Price bid includes costs for furnishing and delivering 6-inch Class 325 BFV to specified location, including manufacturer's specified field services.	Payment will be based on the number of 6-inch Class 325 BFVs delivered to location specified.
S1-2	6-inch Class 350 BFV	Unit Price bid includes costs for furnishing and delivering 6-inch Class 350 BFV to specified location, including manufacturer's specified field services.	Payment will be based on the number of 6-inch Class 350 BFVs delivered to location specified.
S1-3	8-inch Class 375 BFV	Unit Price bid includes costs for furnishing and delivering 8-inch Class 375 BFV to specified location, including manufacturer's specified field services.	Payment will be based on the number of 8-inch Class 375 BFVs delivered to location specified.
S3-1	6-inch Class 175 BFV	Unit Price bid includes costs for furnishing and delivering 6-inch Class 175 BFV to specified location, including manufacturer's specified field services.	Payment will be based on the number of 6-inch Class 175 BFVs delivered to location specified.

No.	Item	Description	Payment
S3-2	8-inch Class 175 BFV	Unit Price bid includes costs for furnishing and delivering 8-inch Class 175 BFV to specified location, including manufacturer's specified field services.	Payment will be based on the number of 8-inch Class 175 BFVs delivered to location specified.
S4A-1	6-inch Class 175 BFV	Unit Price bid includes costs for furnishing and delivering 6-inch Class 175 BFV to specified location, including manufacturer's specified field services.	Payment will be based on the number of 6-inch Class 175 BFVs delivered to location specified.
S4A-2	8-inch Class 175 BFV	Unit Price bid includes costs for furnishing and delivering 8-inch Class 175 BFV to specified location, including manufacturer's specified field services.	Payment will be based on the number of 8-inch Class 175 BFVs delivered to location specified.
S4A-3	10-inch Class 175 BFV	Unit Price bid includes costs for furnishing and delivering 10-inch Class 175 BFV to specified location, including manufacturer's specified field services.	Payment will be based on the number of 10-inch Class 175 BFVs delivered to location specified.
S4A-4	16-inch Class 175 BFV	Unit Price bid includes costs for furnishing and delivering 16-inch Class 175 BFV to specified location, including manufacturer's specified field services.	Payment will be based on the number of 16-inch Class 175 BFVs delivered to location specified.

PART 2 PRODUCTS (NOT USED)

PART 3 EXECUTION (NOT USED)

END OF SECTION

SECTION 01 33 00
SUBMITTAL PROCEDURES

PART 1 GENERAL

1.01 SUMMARY

A. This Section includes administrative and procedural requirements for submitting Shop Drawings, Product Data, Samples, and other submittals.

1.02 DEFINITIONS

A. Action Submittals: Written and graphic information that requires CONSTRUCTION MANAGER's responsive action.

B. Informational Submittals: Written information that does not require CONSTRUCTION MANAGER's responsive action. Submittals may be rejected for not complying with requirements.

1.03 SUBMITTAL PROCEDURES

A. Contract Manager System: To expedite the transmittal and review of Submittal data, the CONSTRUCTION MANAGER has established a web-based "Contract Manager" System as the contract administration and document control software on the Project. Use this system to transmit documents and track the submittals, RFIs and overall Project communication. Use the "Contract Manager" System for submittal data that can be easily transmitted electronically.

B. Forms: The preferred forms for submittals are as developed by the CONSTRUCTION MANAGER or resident in the "Contract Manager". Obtain consent of the CONSTRUCTION MANAGER prior to using other forms. The following list of forms may be used but the list is not necessarily inclusive:

1. CM – 307, Memorandum of Delay.
2. CM – 432, System Outage Request.
3. CM – 503, Request for Shutdown.
4. CM – 1004, Request for Adjustment of Retainage.
5. CM – 1005, Consent of Surety for Reduction of Partial Release of Retainage.
6. CM – 1006, Consent of Surety for Final Payment.
7. CM – 1007, Affidavit of Payment.
8. CM – 1202, CONTRACTOR's Certification of Completion.
9. CM – 1301, Partial Waiver of Lien.
10. CM – 1302, Final Waiver of Lien.
11. CM – 1303, Affidavit of Release of Lien.

C. Coordination: Coordinate preparation and processing of submittals with performance of construction activities.

1. Coordinate each submittal with fabrication, purchasing, testing, delivery, other submittals, and related activities that require sequential activity.
2. Coordinate transmittal of different types of submittals for related parts of the Work so processing will not be delayed because of need to review submittals concurrently for coordination.
   a. CONSTRUCTION MANAGER reserves the right to withhold action on a submittal requiring coordination with other submittals until related submittals are received.

D. Within 7 days after the date of commencement as stated in the Notice to Proceed, submit the following items for review:

1. A preliminary schedule of Shop Drawings, Samples, and proposed Substitutes ("Or-Equal") submittals as required in the Contract Documents.

E. Processing Time: Allow enough time for submittal review, including time for resubmittals, as follows. Time for review commences on CONSTRUCTION MANAGER's receipt of submittal. No extension of the Contract Time will be authorized because of failure to transmit submittals enough in advance of the Work to permit processing, including resubmittals.

1. Initial Review: Allow 15 working days for initial review of each submittal. Allow additional time if coordination with subsequent submittals is required. CONSTRUCTION MANAGER will advise when a submittal being processed must be delayed for coordination. It is considered reasonable that a complete and acceptable submittal is made to the CONSTRUCTION MANAGER by the first resubmittal on an item. UTILITIES reserves the right to withhold monies to cover additional costs of the CONSTRUCTION MANAGER's review beyond the first resubmittal. The CONSTRUCTION MANAGER's maximum review period for each submittal or resubmittal will be 15 working days.
2. Intermediate Review: If intermediate submittal is necessary, process it in same manner as initial submittal.
3. Resubmittal Review: Allow 15 working days for review of each resubmittal.

F. Identification: Place a permanent label or title block on each submittal for identification.

1. Indicate name of firm or entity that prepared each submittal on label or title block.

2. Provide a space approximately 6 by 8 inches on label or beside title block to record review and approval markings and action taken by CONSTRUCTION MANAGER and/or ENGINEER.
3. Include the following information on label for processing and recording action taken:
   a. Project name.
   b. Date.
   c. Name and address of CONSTRUCTION MANAGER and ENGINEER.
   d. Name and address of SUPPLIER.
   e. Name and address of subcontractor.
   f. Name and address of supplier.
   g. Name of manufacturer.
   h. Submittal number or other unique identifier, including revision identifier.
      1) Use the Specification Section number followed by a decimal point and then a sequential number (e.g., 061000.01) for the submittal number. Resubmittals include an alphabetic suffix after another decimal point (e.g., 061000.01.A).
   i. Number and title of appropriate Specification Section.
   j. Drawing number and detail references, as appropriate.
   k. Location(s) where product is to be installed, as appropriate.
   l. Other necessary identification.

G. Deviations: Highlight, encircle, or otherwise specifically identify deviations from the Contract Documents on submittals.

H. Additional Copies: Unless additional copies are required for final submittal, and unless CONSTRUCTION MANAGER and/or ENGINEER observes noncompliance with provisions in the Contract Documents, initial submittal may serve as final submittal.

   1. Additional copies submitted for maintenance manuals will not be marked with action taken and will be returned.

I. Transmittal: Package each submittal individually and appropriately for transmittal and handling. Include the CONSTRUCTION MANAGER's standard submittal transmittal form, a reproducible copy of which is available from the CONSTRUCTION MANAGER, with each transmitted submittal. Submittals without the form or where applicable items on the form are not completed will be returned for resubmittal. CONSTRUCTION MANAGER will discard submittals received from sources other than SUPPLIER.

   1. Organization:
      a. Use a single submittal transmittal form for each technical specification section or item or class of material or equipment for which a submittal is required. A single submittal covering

multiple sections will not be acceptable, unless the primary specification references other sections for components.

b. On the transmittal form, index the components of the submittal and insert tabs in the submittal to match the components. Relate the submittal components to specification paragraph and subparagraph, Drawing number, detail number, schedule title or room number as applicable.

c. Unless indicated otherwise, match terminology and equipment names and numbers used in submittals with those used in the Contract Documents.

d. Disorganized submittals will be returned without review.

J. Resubmittals: Make resubmittals in same form and number of copies as initial submittal.

1. Note date and content of previous submittal.
2. Note date and content of revision in label or title block and clearly indicate extent of revision.
3. Resubmit submittals until they are marked “Reviewed with CONSTRUCTION MANAGER and/or ENGINEER’s action stamp”.

K. Distribution: Furnish copies of final submittals to manufacturers, subcontractors, suppliers, fabricators, installers, authorities having jurisdiction, and others as necessary for performance of construction activities. Show distribution on transmittal forms.

1. Use for Construction: Use only final submittals with mark indicating “Reviewed with CONSTRUCTION MANAGER and/or ENGINEER’S action stamp” taken by CONSTRUCTION MANAGER and/or ENGINEER.

1.04 CONTRACTOR'S USE OF ENGINEER'S CAD FILES

A. General: ENGINEER's CAD files will not be provided for use in connection with Project.

PART 2 PRODUCTS

2.01 ACTION SUBMITTALS

A. General: Prepare and submit Action Submittals required by individual Specification Sections.

B. Product Data: Collect information into a single submittal for each element of construction and type of product or equipment.

1. If information must be specially prepared for submittal because standard printed data are not suitable for use, submit as Shop Drawings, not as Product Data.
2. Mark each copy of each submittal to show which products and options are applicable.
3. Include the following information, as applicable:
    a. Manufacturer's written recommendations.
    b. Manufacturer's product specifications.
    c. Manufacturer's installation instructions.
    d. Manufacturer's catalog cuts.
    e. Printed performance curves.
    f. Operational range diagrams.
    g. Compliance with specified referenced standards.
    h. Testing by recognized testing agency.
4. Number of Copies: Submit five copies of Product Data, unless otherwise indicated. Provide one additional copy for submittals requiring review by a consultant. CONSTRUCTION MANAGER will return two (2) copies. Mark up and retain one returned copy as a Project Record Document.

C. Shop Drawings: Wherever called for in the Contract Documents or where required by the CONSTRUCTION MANAGER, furnish a Shop Drawing submittal. Shop Drawings may include detail design calculations, shop-prepared drawings, fabrication and installation drawings, erection drawings, lists, graphs, catalog sheets, data sheets, and similar items. Include the signature and seal of an engineer registered in the appropriate branch in the State of Colorado, unless otherwise indicated, whenever design calculations are required to be submitted as part of a submittal. Prepare Project-specific information, drawn accurately to scale. Do not base Shop Drawings on reproductions of the Contract Documents or standard printed data.

1. Preparation: Fully illustrate requirements in the Contract Documents. Include the following information, as applicable:
    a. Dimensions.
    b. Identification of products.
    c. Fabrication and installation drawings.
    d. Shop work manufacturing instructions.
    e. Templates and patterns.
    f. Schedules.
    g. Notation of coordination requirements.
    h. Notation of dimensions established by field measurement.
    i. Relationship to adjoining construction clearly indicated.
    j. Seal and signature of professional engineer if specified.
2. Transmittal Form: Include the CONSTRUCTION MANAGER's standard submittal transmittal form, a reproducible copy of which is available from the CONSTRUCTION MANAGER, with Shop Drawing

submittals. A submittal without the form or where applicable items on the form are not completed will be returned for resubmittal.

3. Sheet Size: Except for templates, patterns, and similar full-size drawings, submit Shop Drawings on sheets at least 8-1/2 by 11 inches but no larger than 36 by 48 inches.
4. Number of Copies: Submit one original plus six hard copies and one electronic copy ("PDF" format) of each submittal. CONSTRUCTION MANAGER will return a transcribed copy in non-editable electronic format.
5. Collate and bind: Number every page in a submittal in sequence. Collate and staple or bound, as appropriate each copy of a submittal. The CONSTRUCTION MANAGER will not collate sheets or copies.

D. Product Schedule or List: As required in individual Specification Sections, prepare a written summary indicating types of products required for the Work and their intended location.

1. Number of Copies: Submit four (4) copies of product schedule or list, unless otherwise indicated. CONSTRUCTION MANAGER will return one copy.

2.02 INFORMATIONAL SUBMITTALS

A. General: Prepare and submit Informational Submittals required by other Specification Sections.

1. Number of Copies: Three copies of each submittal, unless otherwise indicated. CONSTRUCTION MANAGER will not return copies.
2. Certificates and Certifications: Provide a notarized statement that includes signature of entity responsible for preparing certification. Include the signature of an officer or other individual authorized to sign documents on behalf of that entity for certificates and certifications.

PART 3 EXECUTION

3.01 SUPPLIER'S REVIEW

A. Review each submittal and check for coordination with other Work of the Contract and for compliance with the Contract Documents. Note corrections and field dimensions. Mark with approval stamp before submitting to CONSTRUCTION MANAGER.

B. Approval Stamp: Stamp each submittal with a uniform, approval stamp. Include Project name and location, submittal number, Specification Section title and number, name of reviewer, date of CONTRACTOR's approval, and statement certifying that submittal has been reviewed, checked, and approved for compliance with the Contract Documents.

3.02 CONSTRUCTION MANAGER'S ACTION

A. General: CONSTRUCTION MANAGER will not receive submittals that do not bear CONTRACTOR's approval stamp and will return them without action.

B. Action Submittals: CONSTRUCTION MANAGER will receive each submittal and forward to appropriate entity to make marks to indicate corrections or modifications required, and return it. CONSTRUCTION MANAGER will stamp each submittal when received. Reviewing entity will stamp each submittal with an action stamp and will mark stamp appropriately to indicate action taken, as follows:

1. NO EXCEPTIONS TAKEN: If a submittal is returned marked "NO EXCEPTIONS TAKEN," formal revision and resubmission will not be required.
2. MAKE CORRECTIONS NOTED: If a submittal is returned marked "MAKE CORRECTIONS NOTED," make the corrections on the submittal, but formal revision and resubmission will not be required.
3. AMEND AND RESUBMIT: If a submittal is returned marked "AMEND AND RESUBMIT," revise it and resubmit the required number of copies. Resubmittal of portions of multi-page or multi-drawing submittals will **not** be allowed. For example, if a Shop Drawing submittal consisting of 10 drawings contains one drawing noted as "AMEND AND RESUBMIT," the submittal as a whole is deemed "AMEND AND RESUBMIT" and all 10 drawings are required to be resubmitted.
4. REJECTED – SEE REMARKS: If a submittal is returned marked "REJECTED – SEE REMARKS," means either that the proposed material or product does not satisfy the specification, the submittal is so incomplete that it cannot be reviewed, or is a substitution request not submitted in accordance with the Contract Documents. Prepare a new submittal that is in conformance with the Contract Documents and submit the required number of copies for review.

C. Fabrication of an item may commence only after the CONSTRUCTION MANAGER has returned the pertinent submittals marked either "NO EXCEPTIONS TAKEN" or "MAKE CORRECTIONS NOTED." Corrections indicated on submittals are considered as changes necessary to meet the requirements of the Contract Documents and not as changes to the contract requirements.

D. Review submittals prior to submission to the CONSTRUCTION MANAGER. Sign and date each submittal as being correct and in strict conformance with the Contract Documents. In the case of Shop Drawings, date and sign each sheet. Note deviations from the Contract Documents on the transmittal sheet. The CONSTRUCTION MANAGER will only receive submittals that have

been so verified. Non-verified submittals will be returned without action taken.

E. Corrections or comments made on the SUPPLIER's Shop Drawings during review do not relieve the SUPPLIER from compliance with Contract Drawings and Specifications. Review is for conformance to the program, design concept and general compliance with the Contract Documents only. The SUPPLIER is responsible for confirming and correlating all dimensions and quantities, fabrication processes and techniques, coordinating the Work of all trades, satisfactory and safe performance of the Work, and the quality, means, and methods of construction.

F. Informational Submittals: CONSTRUCTION MANAGER will review each submittal and will not return it, or will return it if it does not comply with requirements. CONSTRUCTION MANAGER will forward each submittal to appropriate party.

G. Partial submittals are not acceptable, will be considered non-responsive, and will be returned without review.

H. Submittals not required by the Contract Documents may not be reviewed and may be discarded.

END OF SECTION

SECTION 01 43 33
MANUFACTURERS' FIELD SERVICES

PART 1 GENERAL

1.01 DEFINITIONS

A. Person-Day: One person for 8 hours within regular working hours.

1.02 QUALIFICATION OF MANUFACTURER'S REPRESENTATIVE

A. Authorized representative of the manufacturer, factory trained, and experienced in the technical applications, installation, operation, and maintenance with full authority by the manufacturer to issue the certifications required of the manufacturer. Additional qualifications may be specified elsewhere.

B. Representative subject to acceptance by CONSTRUCTION MANAGER. No substitute representatives will be allowed unless prior written approval by such has been given.

PART 2 PRODUCTS (NOT USED)

PART 3 EXECUTION

3.01 FULFILLMENT OF SPECIFIED MINIMUM SERVICES

A. Furnish manufacturers' services when required by an individual specification section, to meet the requirements of this Section.

B. Where time is necessary in excess of that stated in the Specifications for manufacturers' services, or when a minimum time is not specified, the time required to perform the specified services will be considered incidental.

C. Schedule manufacturer' services to avoid conflict with other onsite testing or other manufacturers' onsite services.

D. Determine, before scheduling services, that conditions necessary to allow successful testing have been met.

E. Only those days of service approved by CONSTRUCTION MANAGER will be credited to fulfill the specified minimum services.

F. When specified in individual specification sections, manufacturer's onsite services shall include:

1. Assistance during product (system, subsystem, or component) installation to include observation, guidance, instruction of CONTRACTOR's assembly, erection, installation or application procedures.
2. Inspection, checking, and adjustment as required for product (system, subsystem, or component) to function as warranted by manufacturer.
3. Providing, on a daily basis, copies of manufacturers' representatives field notes and data to CONSTRUCTION MANAGER.
4. Revisiting the Site as required to correct problems and until installation and operation are acceptable to CONSTRUCTION MANAGER.
5. Resolution of assembly or installation problems attributable to, or associated with, respective manufacturer's products and systems.
6. Additional requirements may be specified elsewhere.

3.02 MANUFACTURER'S CERTIFICATE OF COMPLIANCE

A. When specified in individual Specification section, submit prior to shipment of product or material.

END OF SECTION

SECTION 01 77 00
CLOSEOUT PROCEDURES

PART 1 GENERAL

1.01 SUBMITTALS

A. Informational Submittals:

1. Submit with application for final payment.
   a. Special bonds, Special Guarantees, and Service Agreements.
   b. Consent of Surety to Final Payment: As required in General Conditions.
   c. Releases or Waivers of Liens and Claims: As required in General Conditions.
   d. Final Application for Payment.
   e. Extra Materials: As required by individual Specification sections.

PART 2 PRODUCTS (NOT USED)

PART 3 EXECUTION (NOT USED)

END OF SECTION

SECTION 01 78 23
OPERATION AND MAINTENANCE DATA

PART 1 GENERAL

1.01 SECTION INCLUDES

A. Information for the preparation, submission, and review of Operations and Maintenance (O&M) Data, as required by individual Specification sections.

1.02 DEFINITIONS

A. Preliminary Data: Initial and subsequent submissions to CONSTRUCTION MANAGER for ENGINEER's review.

B. Final Data: ENGINEER-accepted data, submitted as specified herein.

C. Maintenance Operation: As used on Maintenance Summary Form is defined to mean any routine operation required to ensure satisfactory performance and longevity of equipment. Examples of typical maintenance operations are lubrication, belt tensioning, adjustment of pump packing glands, and routine adjustments.

1.03 SEQUENCING AND SCHEDULING

A. Equipment and System Data:

1. Provide manuals for equipment and systems prepared by equipment manufacturer or system Supplier.
2. Preliminary Data:
   a. Do not submit until Shop Drawing for equipment or system has been reviewed and approved by ENGINEER.
   b. Submit prior to shipment date. Include copies of warranties, bonds, and service agreements if specified.
3. Final Data: Submit Instructional Manual Formatted data not more than 90 days after notice to proceed.

1.04 DATA FORMAT

A. Prepare preliminary data in the form of an instructional manual. Prepare final data in data compilation format on electronic media.

B. Instructional Manual Format:

1. Binder: Commercial quality, permanent, three-ring or three-post binders with durable plastic cover.
2. Size: 8-1/2 inches by 11 inches, minimum.

3. Cover: Identify manual with typed or printed title "OPERATION AND MAINTENANCE DATA, VOLUME NO. ____ OF ____," and list:
   a. Project title.
   b. Designate applicable system, equipment, material, or finish.
   c. Identity of separate structure as applicable.
   d. Identity of general subject matter covered in manual. Identity of equipment number and Specification section.
4. Title Page:
   a. SUPPLIER name, address, and telephone number.
      1) Provide name and telephone number of local source of supply for parts and replacement.
5. Table of Contents:
   a. Neatly typewritten and arranged in systematic order with consecutive page numbers.
   b. Identify each product by product name and other identifying numbers or symbols as set forth in Contract Documents.
6. Paper: 20-pound minimum, white for typed pages.
7. Text: Manufacturer's printed data, or neatly typewritten.
8. Three-hole punch data for binding and composition; arrange printing so that punched holes do not obliterate data.
9. Provide material suitable for reproduction, with quality equal to original. Photocopying of material will be acceptable, except for material containing photographs.

C. Electronic Media Format:

1. Portable Document Format (PDF):
   a. After preliminary data has been found to be acceptable to ENGINEER, submit Operation and Maintenance data in PDF format on CD.
   b. Files to be exact duplicates of ENGINEER-accepted preliminary data. Arrange by specification number and name.
   c. Files to be fully functional and viewable in most recent version of Adobe Acrobat.

1.05 SUBMITTALS

A. Informational:

1. Data Outline: Submit two copies to CONSTRUCTION MANAGER of a detailed outline of proposed organization and contents of Final Data prior to preparation of Preliminary Data.
2. Preliminary Data:
   a. Submit five copies to CONSTRUCTION MANAGER for ENGINEER's review.

b. If data meets conditions of the Contract:
   1) One copy will be retained by UTILITIES.
   2) One copy will be retained by SUPPLIER.
   3) Two copies will be retained by CONSTRUCTION MANAGER.
   4) One copy will be retained in ENGINEER's file.

c. If data does not meet conditions of the Contract, copies will be returned to CONSTRUCTION MANAGER and distributed as follows:
   1) Copies will be returned to SUPPLIER with ENGINEER's comments (on separate document) for revision.
   2) ENGINEER's comments will be retained in ENGINEER's file.
   3) Resubmit five copies revised in accordance with ENGINEER's comments.

3. Final Data: Submit three copies to CONSTRUCTION MANAGER in format specified herein.

1.06 DATA FOR EQUIPMENT AND SYSTEMS

A. Content For Each Unit (or Common Units) and System:

1. Product Data:
   a. Include only those sheets that are pertinent to specific product.
   b. Clearly annotate each sheet to:
      1) Identify specific product or part installed.
      2) Identify data applicable to installation.
      3) Delete references to inapplicable information.
   c. Function, normal operating characteristics, and limiting conditions.
   d. Performance data, engineering data, nameplate data, and tests.
   e. Complete nomenclature and commercial number of replaceable parts.
   f. Original manufacturer's parts list, illustrations, detailed assembly drawings showing each part with part numbers and sequentially numbered parts list, and diagrams required for maintenance.
   g. Spare parts ordering instructions.
2. Drawings: Supplement product data with Drawings as necessary to clearly illustrate:
   a. Format:
      1) Provide reinforced, punched, binder tab; bind in with text.
      2) Reduced to 8-1/2 inches by 11 inches, or 11 inches by 17 inches folded to 8-1/2 inches by 11 inches.

3) Where reduction is impractical, fold and place in 8-1/2-inch by 11-inch envelopes bound in text.
4) Identify Specification section and product on Drawings and envelopes.

b. Relations of component parts of equipment and systems.

3. Instructions and Procedures: Within text, as required to supplement product data.
   a. Format:
      1) Organize in consistent format under separate heading for each different procedure.
      2) Provide logical sequence of instructions for each procedure.
      3) Provide information sheet for UTILITIES' personnel, including:
         a) Proper procedures in event of failure.
         b) Instances that might affect validity of guarantee or Bond.
   b. Installation Instructions: Including alignment, adjusting, calibrating, and checking.
   c. Operating Procedures:
      1) Startup, break-in, routine, and normal operating instructions.
      2) Safety precautions.
      3) Special operating instructions.
   d. Maintenance and Overhaul Procedures:
      1) Routine maintenance.
      2) Guide to troubleshooting.
      3) Disassembly, removal, repair, reinstallation, and re-assembly.
4. Guarantee, Bond, and Service Agreement: Within text, as required to supplement product data.

B. Maintenance Summary:

1. Compile individual Maintenance Summary for each applicable equipment item, respective unit or system, and for components or sub-units.
2. Format:
   a. Use Maintenance Summary Form bound with this section or electronic facsimile of such.
   b. Each Maintenance Summary may take as many pages as required.
   c. Use only 8-1/2-inch by 11-inch size paper.
   d. Complete using typewriter or electronic printing.
3. Include detailed lubrication instructions and diagrams showing points to be greased or oiled; recommend type, grade, and temperature range of lubricants and frequency of lubrication.
4. Recommended Spare Parts:
   a. Data to be consistent with manufacturer's Bill of Materials/Parts List furnished in O&M manuals.

b. “Unit” is the unit of measure for ordering the part.
c. “Quantity” is the number of units recommended.
d. “Unit Cost” is the current purchase price.

1.01 MATERIAL SAFETY DATA SHEETS (MSDS)

A. Provide MSDSs for chemicals that will become part of SDS and chemicals required for future maintenance.

1.02 SUPPLEMENTS

A. The supplements listed below, following “End of Section,” are part of this Specification.

1. Forms: Maintenance Summary Form.

PART 2 PRODUCTS (NOT USED)

PART 3 EXECUTION (NOT USED)

END OF SECTION

MAINTENANCE SUMMARY FORM

PROJECT:_____ CONTRACT NO.:_____

1. EQUIPMENT ITEM_____

2. MANUFACTURER _____

3. EQUIPMENT/TAG NUMBER(S) _____

4. WEIGHT OF INDIVIDUAL COMPONENTS (OVER 100 POUNDS)_____

5. NAMEPLATE DATA (hp, voltage, speed, etc.) _____

6. MANUFACTURER'S LOCAL REPRESENTATIVE _____

   a. Name_____ Telephone No. _____

   b. Address _____

7. MAINTENANCE REQUIREMENTS

Maintenance Operation Comments	**Frequency**	**Lubricant (If Applicable)**
List briefly each maintenance operation required and refer to specific information in manufacturer's standard maintenance manual, if applicable. (Reference to manufacturer's catalog or sales literature is not acceptable.)	List required frequency of each maintenance operation.	Refer by symbol to lubricant required.

8. LUBRICANT LIST

Reference Symbol	Shell	Exxon Mobile	Chevron Texaco	BP Amoco	Or Equal
List symbols used in No. 7 above.	List equivalent lubricants, as distributed by each manufacturer for the specific use recommended.				

9. RECOMMENDED SPARE PARTS FOR OWNER'S INVENTORY.

Part No.	Description	Unit	Quantity	Unit Cost
Note: Identify parts provided by this Contract with two asterisks.				

SECTION 09 90 04
PAINTING

PART 1 GENERAL

1.01 REQUIREMENT

A. The Work of this section includes the materials application, testing, and clean up of painting as described herein.

1.02 REFERENCES

A. The following is a list of standards which may be referenced in this section:

1. NACE International (NACE): RP0188, Discontinuity (Holiday) Testing of New Protective Coatings on Conductive Substrates.
2. The Society for Protective Coatings (SSPC):
   a. PA 1, Shop, Field, and Maintenance Painting.
   b. PA 2, Measurement of Dry Coating Thickness with Magnetic Gages.
   c. PA 3, Guide to Safety in Paint Applications.
   d. SP 1, Solvent Cleaning.
   e. SP 2, Hand Tool Cleaning.
   f. SP 3, Power Tool Cleaning.
   g. SP 5, Joint Surface Preparation Standard White Metal Blast Cleaning.
   h. SP 6, Joint Surface Preparation Standard Commercial Blast Cleaning.
   i. SP 7, Joint Surface Preparation Standard Brush-Off Blast Cleaning.
   j. SP 10, Joint Surface Preparation Standard Near-White Blast Cleaning.
   k. SP 11, Power Tool Cleaning to Bare Metal.
   l. SP 12, Surface Preparation and Cleaning of Steel and Other Hard Materials by High- and Ultrahigh-Pressure Water Jetting Prior to Recoating.
   m. SP 13, Surface Preparation of Concrete.
3. NSF International (NSF): 61 Drinking Water Components—Health Effects.

1.03 DEFINITIONS

A. Terms used in this section:

1. Coverage: Total minimum dry film thickness in mils or square feet per gallon.
2. MDFT: Minimum Dry Film Thickness, mils.
3. MDFTPC: Minimum Dry Film Thickness Per Coat, mils.
4. Mil: Thousandth of an inch.
5. PSDS: Paint System Data Sheet.
6. PVC: Polyvinyl Chloride.
7. SP: Surface Preparation.

1.04 SUBMITTALS

A. Action Submittals:

1. Shop Drawings:
   a. Product Data Sheets:
      1) For each paint system, furnish Paint System Data Sheet (PSDS), manufacturer's technical data sheets, and paint colors available (where applicable). Sample PSDS form is appended to end of this section.
      2) Submit required information on a system-by-system basis.
      3) Furnish copies of paint system submittals to coating applicator.
      4) Indiscriminate submittal of manufacturer's literature is not acceptable.

B. Informational Submittals:

1. Manufacturer's written verification that submitted products are suitable for the intended use.
2. Factory Applied Coatings: Manufacturer's certification stating factory applied coating system meets or exceeds requirements specified herein.
3. If manufacturer of finish coating differs from that of shop primer, provide both manufacturers' written confirmation that materials are compatible.

1.05 QUALITY ASSURANCE

A. Applicator's Experience: Minimum 5 years' practical experience in application of specified products.

B. Regulatory Requirements:

1. Meet federal, state, and local requirements limiting emission of volatile organic compounds.
2. Perform surface preparation and painting in accordance with recommendations of the following:
   a. Paint manufacturer's instructions.
   b. SSPC PA 3, Guide to Safety in Paint Applications.
   c. Federal, state, and local agencies having jurisdiction.

1.06 PROJECT CONDITIONS

A. Environmental Requirements:

1. Do not apply paint in temperatures outside of manufacturer's recommended maximum or minimum allowable, or in dust, smoke-laden atmosphere, damp or humid weather.
2. Do not perform abrasive blast cleaning whenever relative humidity exceeds 85 percent, or whenever surface temperature is less than 5 degrees F above dewpoint of ambient air. Strictly adhere to coating manufacturer's recommendations.

1.07 EXTRA MATERIALS

A. Provide small quantity kits for touchup painting and for painting other small areas.

PART 2 PRODUCTS

2.01 MANUFACTURERS

A. Use a nationally recognized paint manufacturer of paints and protective coatings regularly engaged in production of such materials that have essentially identical service conditions as this Project.

B. Minimum of 5 years of verifiable experience in manufacture of specified products.

2.02 ABRASIVE MATERIALS

A. Select abrasive type and size to produce surface profile that meets coating manufacturer's recommendations for specific primer and coating system to be applied.

2.03 PAINT MATERIALS

A. General:

1. Material Quality: Manufacturer's highest quality products and suitable for the intended service.
2. Materials Including Primer and Finish Coats: Produced by same paint manufacturer.
3. Thinners, Cleaners, Driers, and Other Additives: As recommended by paint manufacturer of particular coating.

B. Products:

Product	Definition
NSF Epoxy	Polyamide epoxy, approved for potable water contact and conforming to NSF 61.

2.04 COLORS

A. Provide as shown for equipment and appurtenances and designated herein selected by UTILITIES.

B. Formulate with colorants free of lead, lead compounds, or other materials that might be affected by presence of hydrogen sulfide or other gas likely to be present at the Site.

C. Proprietary identification of colors is for identification only. Any authorized manufacturer may supply matches.

2.05 SHOP FINISHES

A. Shop Blast Cleaning: Reference paragraph Shop Coating Requirements, this section.

B. Shop Coating Requirements: When required by equipment Specifications, prime and finish coat such equipment in shop by manufacturer.

PART 3 EXECUTION

3.01 GENERAL

A. Surface Preparation Inspection: Inspect and provide substrate surfaces prepared in accordance with these Specifications and printed directions and recommendations of paint manufacturer whose product is to be applied. In event of conflict, more stringent applies.

B. The intention of these Specifications is for new, interior and exterior metal and submerged metal surfaces to be painted, whether specifically mentioned or not, except as modified herein.

C. Perform painting in accordance with recommendations of the following:

1. Paint manufacturer's instructions.
2. Federal, state, and local agencies having jurisdiction.

3.02 PROTECTION OF MATERIALS NOT TO BE PAINTED

A. Remove, mask, or otherwise protect surfaces not being painted.

3.03 PREPARATION OF SURFACES

A. Metal Surface Preparation:

1. General:
   a. Submit samples prior to surface preparation blasting.
   b. Conform to current Society for Protective Coatings specifications as follows:
      1) Solvent Cleaning: SP 1.
      2) Hand Tool Cleaning: SP 2.
      3) Power Tool Cleaning: SP 3.
      4) White Metal Blast Cleaning: SP 5.
      5) Commercial Blast Cleaning: SP 6.
      6) Brush-Off Blast Cleaning: SP 7.
      7) Near-White Blast Cleaning: SP 10.
      8) Power Tool Cleaning to Bare Metal: SP 11.
      9) High Pressure Water Jetting: SP 12.
      10) Surface Preparation of Concrete: SP 13.
   c. Where OSHA or EPA regulations preclude standard abrasive blast cleaning, wet- or vacu-blast methods may be required. Follow coatings manufacturers' recommendations for wet-blast additives and first coat application.
   d. Hand-tool clean areas that cannot be cleaned by power-tool cleaning.

2. Blast Cleaning Requirements:
   a. Comply with applicable federal, state, and local, air pollution and environmental control regulations for blast cleaning and disposition of spent aggregate and debris.
   b. Alternatives to standard abrasive blast cleaning methods subject to ENGINEER review and approval prior to starting work.

3.04 PAINT MIXING

A. Multiple-Component Coatings:

1. Prepare using the contents of container for each component as packaged by paint manufacturer.
2. No partial batches will be permitted.
3. Do not use multiple-component coatings that have been mixed beyond their pot life.
4. Mix only components specified and furnished by paint manufacturer.
5. Do not intermix additional components for reasons of color or otherwise, even within same generic type of coating.

B. Keep paint materials sealed when not in use.

C. Where more than one coat of material is applied within given system, alternate color to provide visual reference that required number of coats has been applied.

3.05 PAINT APPLICATION

A. General:

1. Apply coating in accordance with paint manufacturer's recommendations. Allow sufficient time between coats to assure thorough drying of previously applied paint.
2. Paint units to be bolted together and to structures, prior to assembly or installation.

B. Shop Primed or Factory Finished Surfaces:

1. Hand or power sand areas of chipped, peeled, or abraded coating, feathering the edges. Follow with a spot primer using specified primer.
2. For two-package or converted coatings, consult coatings manufacturer for specific procedures as relates to manufacturer's products.
3. Prior to application of finish coats, clean shop-primed surfaces free of dirt, oil, and grease and apply mist coat of specified primer, 1-mil dry film thickness.

C. Manufacturer Applied Paint Systems:

1. Repair abraded areas on factory finished items in accordance with the equipment manufacturer's directions.
2. Carefully blend repaired areas into original finish.

3.06 FIELD QUALITY CONTROL

A. Testing:

1. Test Gauges to be Provided:
   a. Magnetic type dry film thickness gauge, to test coating thickness specified in mils, as manufactured by Nordson Corp., Anaheim, CA; Mikrotest.
   b. Electrical holiday detector, low voltage, wet sponge type, to test completed coating systems, 20 mils or less MDFT, for holidays and discontinuities as manufactured by Tinker and Rasor, San Gabriel, CA, Model M-1.
2. Number of Coats:
   a. Minimum required, irrespective of coating thickness.
   b. Additional coats may be required to obtain minimum required paint thickness, depending on method of application, differences in manufacturers' products, and atmospheric conditions.
3. Application Thickness:
   a. Do not exceed coating manufacturer's recommendations.
   b. Use wet film thickness gauge to measure proper coating thickness during application.
4. Film Thickness Measurement and Electrical Inspection of Coated Surface:
   a. Perform with properly calibrated instruments.
   b. Recoat and repair as necessary for compliance with Specifications.
5. Visually inspect plastic surfaces to ensure proper and complete coverage has been attained.
6. Give particular attention to edges, angles, flanges, and other similar areas, where insufficient film thickness are likely to be present, and ensure proper millage in these areas.
7. Apply additional coats as required to complete hiding of underlying coats. Complete hiding so that additional coats would not increase hiding.
8. Thickness and Continuity Testing:
   a. Measure coating thickness specified in mils with magnetic type dry film thickness gauge in accordance with SSPC PA2.
   b. Check each coat for correct millage. Do not make measurement within 8 hours, minimum, after application of coating.

c. Test finish coat, 20 mils thick or less, for holidays and discontinuities with electrical holiday detector, low voltage, wet sponge type in accordance with NACE RP0188.
d. After repaired and recoated areas have dried sufficiently, retest each repaired area.

B. Damaged Coatings, Pinholes, and Holidays:

1. Feather edges and repair in accordance with recommendations of paint manufacturer.
2. Hand or power sand visible areas of chipped, peeled, or abraded paint, and feather edges. Follow with primer and finish coat in accordance with Specifications. Depending on extent of repair and appearance, finish sanding and topcoat may be required.
3. Apply finish coats, including touchup and damage-repair coats, in a manner, which will present uniform texture and color-matched appearance.

C. Unsatisfactory Application:

1. Clean and top coat surfaces found to have improper finish color or insufficient film thickness.
2. Evidence of runs, bridges, shiners, laps, or other imperfections will be cause for rejection.
3. Repair defects in coating system per written recommendations of coating manufacturer.

3.07 PROTECTIVE COATINGS SYSTEMS

A. System No. 1 Submerged Metal:

Surface Prep.	**Paint Material**	**Min. Coats, Cover**
SP5, White Metal Blast cleaning	NSF Epoxy	3 coats, 3 MDFT PC

3.08 SURFACES NOT REQUIRING PAINTING

A. Unless otherwise stated herein or shown, the following areas or items will not require painting:

1. Nonferrous and corrosion-resistant ferrous alloys such as copper, bronze, Monel, aluminum, chromium plate, atmospherically exposed weathering steel, and stainless steel.

3.09 PAINT APPLICATION SCHEDULE

A. Unless otherwise shown or specified in these Specifications, paint or coat Work in accordance with the following application schedule. In event of discrepancies or omissions in the following, request clarification from CONSTRUCTION MANAGER before starting work in question.

B. System No. 1 Submerged Metal: Use on the following items or areas:

1. Valve actuators.

3.10 SUPPLEMENT

A. The supplement listed below, following "End of Section," is a part of this Specification:

1. Data Sheet: Paint System Data Sheet (PSDS).

END OF SECTION

PAINT SYSTEM DATA SHEET

Complete and attach manufacturer's Technical Data Sheet to this PSDS for each coating system.

Paint System Number (from Spec.):
Paint System Title (from Spec.):
Coating Supplier:
Representative:
Surface Preparation:

Paint Material (Generic)	Product Name/Number (Proprietary)	Min. Coats, Coverage

Provide manufacturer's recommendations for the following parameters at temperature (F)/relative humidity:

Temperature/RH	50/50	70/30	90/25
Induction Time			
Pot Life			
Shelf Life			
Drying Time			
Curing Time			
Min. Recoat Time			
Max. Recoat Time			

Provide manufacturer's recommendations for the following:

Mixing Ratio: _____

Maximum Permissible Thinning:_____

Ambient Temperature Limitations: min.:_____ max.:_____

Surface Temperature Limitations: min.:_____ max.:_____

Surface Profile Requirements: min.:_____ max.:_____

Attach additional sheets detailing manufacturer's recommended storage requirements and holiday testing procedures.

SECTION 40 27 02
TRIPLE OFFSET BUTTERFLY VALVES

PART 1 GENERAL

1.01 SCOPE OF WORK

A. Colorado Springs Utilities Water Line Extension and Service Standards are incorporated by reference.

B. Materials and methods specifically referenced in this section supersede those published by Colorado Springs Utilities.

1.02 DESCRIPTION OF SYSTEM

A. General: The equipment and materials specified are intended to be standard equipment of proven ability for use in controlling the flow of raw water under pressure for transmission pipelines.

1.03 REFERENCES

A. The following is a list of standards that may be referenced in this section:

1. American National Standards Institute (ANSI): B16.1, Cast Iron Pipe Flanges and Flanged Fittings.
2. American Society of Mechanical Engineers (ASME): Section VIII, Boiler and Pressure Vessel Code—Section VIII—Pressure Vessels.
3. American Water Works Association (AWWA):
   a. C111/A21.11, Rubber-Gasket Joints for Ductile-Iron Pressure Pipe and Fittings.
   b. C207, Steel Pipe Flanges for Waterworks Service.
   c. C500, Metal-Seated Gate Valves for Water Supply Service.
   d. C504, Rubber-Seated Butterfly Valves.
   e. C509, Resilient-Seated Gate Valves for Water Supply Service.
   f. C510, Double Check Valve, Backflow Prevention Assembly.
   g. C540, Power-Actuating Devices for Valves and Sluice Gates.
   h. C550, Protective Epoxy Interior Coatings for Valves and Hydrants.
   i. C800, Underground Service Line Valves and Fittings.
4. ASTM International (ASTM):
   a. A276, Standard Specification for Stainless Steel Bars and Shapes.
   b. A351/A351M, Standard Specification for Castings, Austenitic, Austenitic-Ferric (Duplex), for Pressure-Containing Parts.
   c. A536, Standard Specification for Ductile Iron Castings.
   d. A564/A564M, Standard Specification for Hot-Rolled and Cold-Finished Age-Hardening Stainless Steel Bars and Shapes.

e. A565, Standard Specification for Martensitic Stainless Steel Bars for High-Temperature Service.
f. B61, Standard Specification for Steam or Valve Bronze Castings.
g. B62, Standard Specification for Composition Bronze or Ounce Metal Castings.
h. B98/B98M, Standard Specification for Copper-Silicon Alloy Rod, Bar, and Shapes.
i. B127, Standard Specification for Nickel-Copper Alloy (UNS N04400) Plate, Sheet, and Strip.
j. B139, Standard Specification for Phosphor Bronze Rod, Bar and Shapes.
k. B164, Standard Specification for Nickel-Copper Alloy Rod, Bar, and Wire.
l. B194, Standard Specification for Copper-Beryllium Alloy Plate, Sheet, Strip, and Rolled Bar.
m. B584, Standard Specification for Copper Alloy Sand Castings for General Applications.
n. D429, Standard Test Methods for Rubber Property-Adhesion to Rigid Substrates.
o. D1784, Standard Specification for Rigid Poly(Vinyl Chloride) (PVC) Compounds and Chlorinated Poly(Vinyl Chloride) (CPVC) Compounds.

5. NSF International (NSF).

1.04 DESIGN REQUIREMENTS

A. Valves:

1. For the purposes of design calculations, the following are defined:
   a. Working Pressure (psi) equals Pressure Class.

1.05 SUBMITTALS

A. Action Submittals:

1. Shop Drawings:
   a. Product data sheets for each model, including number of turns open to close. Indicate valve Type Number, applicable Tag Number, and facility name/number or service where used.
   b. Complete catalog information, descriptive literature, specifications, and identification of materials of construction.
   c. Sizing calculations for open-close/throttle and modulating valves.

B. Informational Submittals:

1. Manufacturer's Valve Certificate of Compliance with applicable standards, in accordance with Section 01 43 33, Manufacturers' Field Services.

2. Tests and inspection data.
3. Operation and Maintenance Data as specified in Section 01 78 23, Operation and Maintenance Data.
4. Manufacturer's Certificate of Proper Installation, in accordance with Section 01 43 33, Manufacturers' Field Services.

PART 2 PRODUCTS

2.01 GENERAL

A. Valves to include operator, actuator, worm and gear operator and operating nut.

B. Valve to be suitable for intended service. Renewable parts not to be of a lower quality than specified.

C. Furnish valves with no leakage (drip-tight) in either direction at the valve rated design pressures unless otherwise allowed for in this section.

D. Size operator and actuators to operate valve for the full range of pressures and velocities.

E. Valve to open by turning LEFT (counterclockwise).

F. Factory mount operator, actuator, and accessories.

2.02 MATERIALS

A. Bronze and brass valve components and accessories that have surfaces in contact with water to be alloys containing less than 16 percent zinc and 2 percent aluminum.

1. Approved alloys are of the following ASTM designations: B61, B62, B98/B98M (Alloy UNS No. C65100, C65500, or C66100), B139 (Alloy UNS No. C51000), B584 (Alloy UNS No. C90300 or C94700), B164, B194, and B127.
2. Stainless steel Alloy 18-8 may be substituted for bronze.

2.03 VALVES

A. Butterfly Valves:

1. Provide Triple Offset, Double Flanged Butterfly Valves according to the schedule below. There are no "or equal" or substitutions for the named manufacturer allowed.
2. Flanges for Class 175 shall be raised-face, ASME B16.5 Class 150
3. Flanges for Class 325, Class 350 and Class 375 shall be raised face, ASME B16.5 Class 300.

4. Quarter turn rotary shutoff valve with triple offset horizontal shaft from disc centerline.
5. Torque-seated, bi-directional shutoff. Zero-leakage at shutoff in accordance with API 598, Resilient Seat Test.
6. Suitable for dead end service, long periods of nonuse, Open/Close service.
7. Resilient Sealing Surface: Body or disc mounted, laminated seal of Type 316 stainless steel/graphite. Field-replaceable.
8. Mating Sealing Surface: Stellite overlay.
9. One-piece shaft keyed or splined to disc, floating disc design, sealed shaft bearings of hardened stainless steel, bi-directional thrust bearing.
10. Type 316 stainless steel body, shaft, disc, and trim.

6-inch Class 175 BFV	Vanessa Series 30,000 QTF
6-inch Class 325 BFV	Vanessa Series 30,000 QTF
6-inch Class 350 BFV	Vanessa Series 30,000 QTF
8-inch Class 175 BFV	Vanessa Series 30,000 QTF
8-inch Class 375 BFV	Vanessa Series 30,000 QTF
10-inch Class 175 BFV	Vanessa Series 30,000 QTF
16-inch Class 175 BFV	Vanessa Series 30,000 QTF

2.04 OPERATORS

A. Manual Operator:

1. General:
   a. Unless otherwise indicated, furnish valves with manual actuators. Furnish valves in sizes up to and including 4 inches with direct acting lever actuators of the valve manufacturer's standard design. Furnish valves greater than 4 inches in size with gear assisted manual actuators with a maximum operating pull of 40 pounds standard T-handled operating wrench. Furnish valves with worm-gear actuators.
   b. Manual worm gear actuators shall consist of a single or double reduction gear unit contained in a weather proof cast-iron or steel body with cover. Provide 2-inch square operating nut. Furnish the actuator capable of 90-degree rotation and equip with travel stops capable of limiting the valve opening and closing positions. The actuator shall consist of spur or helical gears and worm-gearing. The spur of helical gears shall be of hardened alloy steel and the worm-gear shall be bronze. The worm-gear shaft and the operating nut shall be 17-4 pH or similar stainless steel. Gearing

shall be designed for a 100 percent overload. Manual worm gear actuators manufactured by AUMA; Series GS, or approved equal.

c. Provide self-locking type valve actuators or equip with self-locking device as recommended by the valve manufacturer.

d. Furnish valve actuators with position indicators for quarter-turn valves.

e. Coat ferrous surfaces of the valve actuator in accordance with Section 09 90 04, Painting.

f. Provide valves with hermetically-sealed and grease-packed actuators capable of withstanding a submersion in water of up to 10 psig. Enclose moving parts of valve and operator in suitable housing to prevent contact with soil.

g. Design actuators for quarter-turn valves to withstand 450 foot-pounds of input torque at the fully open and fully closed positions.

PART 3 EXECUTION

3.01 MANUFACTURER'S SERVICES

A. The Supplier's authorized factory representative shall visit each construction site the first day CONSTRUCTION CONTRACTOR begins installation of valves. Instruct CONSTRUCTION CONTRACTOR on proper installation, adjustment and operation. Submit to CONSTRUCTION MANAGER a certificate that SUPPLIER has provide instruction as specified, including signature of CONSTRUCTION CONTRACTOR acknowledging receipt of instruction. See statement of work for period of performance.

B. The general vicinity of the construction sites are shown on the attached Vicinity Map following "End of Section."

3.02 SUPPLEMENTS

A. The supplements listed below, following "End of Section," are part of this Specification

1. Vicinity Map.

END OF SECTION

FILENAME: PP1_SP201nG30d_171473.dgn PLOT DATE: 4/8/2011

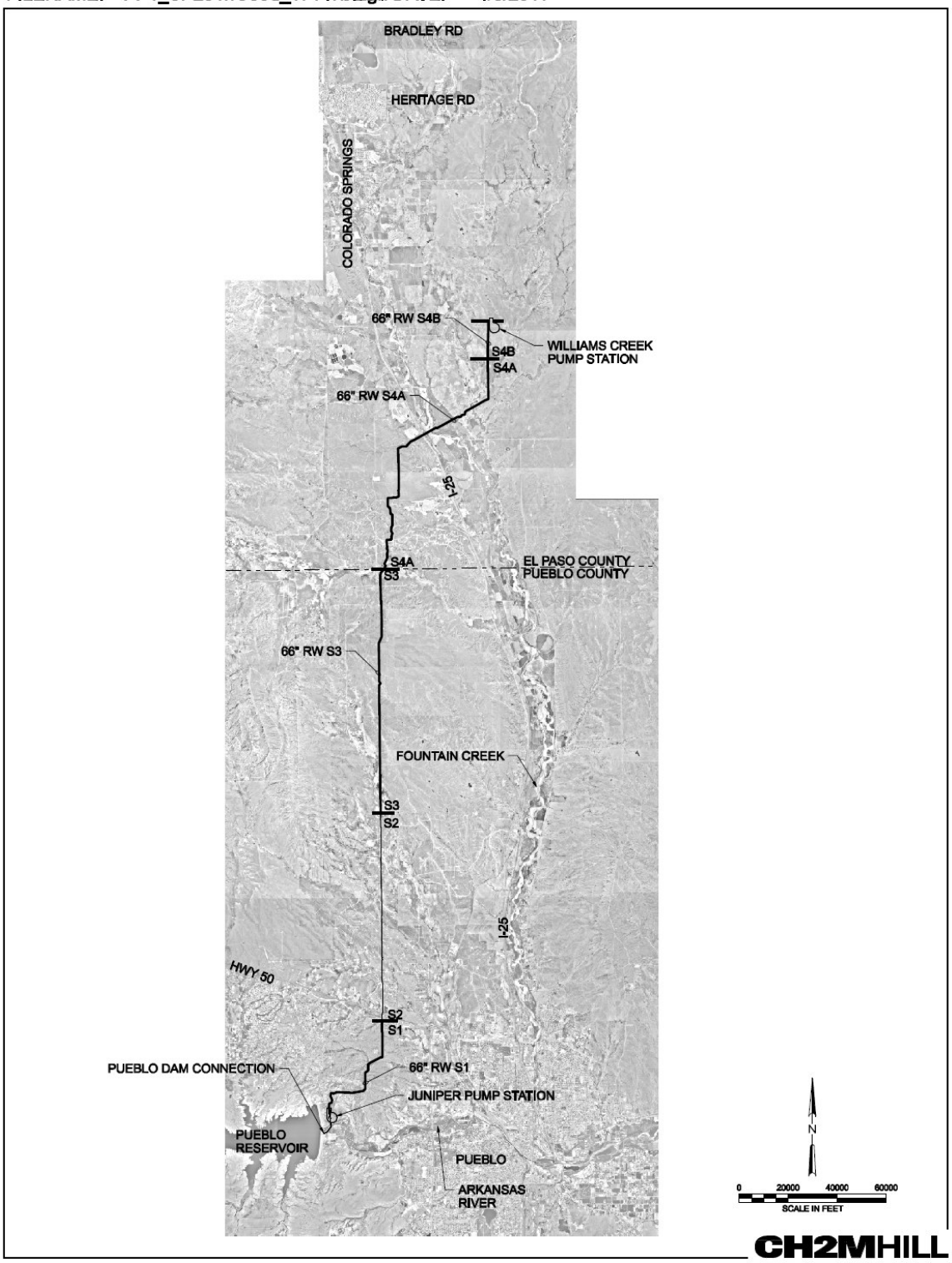

SU Project Number: SDS-002 CSU Work Order Number: 1146977

VICINITY MAP

SECTION 01 66 13
PRODUCT STORAGE AND HANDLING REQUIREMENTS FOR HAZARDOUS MATERIALS

PART 1 GENERAL

1.01 ACTION SUBMITTALS

A. Hazardous Materials Management Plan.

PART 2 PRODUCTS

PART 3 EXECUTION

3.01 HAZARDOUS MATERIALS MANAGEMENT

A. Comply with regulations relating to the handling, storage, transportation and spill/ release response and reporting of hazardous materials as set forth by OSHA (Emergency and Spill Response Planning), DOT (Transportation of Hazardous Materials), EPA (Management of Hazardous Materials and Waste) and NRC (Notification of Unplanned Spills and/or Releases) regulations; as applicable. Compliance includes, but is not limited to adhering to proper storage containers, secondary containment, access control, security, signage, release response and reporting, labeling, placarding, manifesting, transporting, and disposal.

B. Store materials and equipment in secure areas and arrange partitions to provide security of contents and ready access for inspection and inventory. Combustible materials (paint, solvents, fuels) shall be stored in a well-ventilated building meeting safety standards. Hazardous materials shall be stored according to product specification, codes, and manufacturer's instructions.

C. Prepare and implement Health, Safety and Environmental Plans, including hazardous material management and spill response, in compliance with Federal, State and Local regulations prior to mobilizing onsite for Project construction. Prepare and implement a Hazardous Materials Management Plan that meets the requirements of General Conditions, Section 4.06 Hazardous Environmental Condition at Site, include procedures for the following in this Plan:

1. Hazardous materials inventory that identifies potentially hazardous substances to be used on the job site. Include copies of Material Safety Data Sheets in the Plan and make available at the job site.

2. Procedures for monitoring, identifying, and recognizing unanticipated suspect hazardous substances that may be encountered during the course of construction.
3. Procedures to address worker protection and public safety requirements as specified in Section 01 35 29, Health and Safety.
4. General process for communication with the CONSTRUCTION Manager (CM) and UTILITIES' Environmental Manager (UEM) that shall be followed when unknown hazardous substances are encountered during construction activities. The Southern Delivery System workflow for a Hazardous Substance Spill or Encounter is the minimum chain of notification. This workflow is attached in Section 01 57 19, Temporary Environmental Controls.
5. Onsite management of hazardous waste and petroleum contaminated soils; if encountered.

D. The CONTRACTOR's Safety Representative shall perform regular audits on the control and management of hazardous materials to:

1. Identify any deficiencies and establish and implement necessary corrective actions. Activities related to hazardous materials management shall be included in the daily reports.
2. Inspect the ground surface for any evidence of incidental spills or releases of petroleum and/or hazardous substances. Evidence includes, but not limited to, soil staining, unusual odors or colors. Immediately notify the CONSTRUCTION MANAGER of any spill or release of hazardous materials and/or petroleum products identified.

END OF SECTION

SECTION 01 71 13
MOBILIZATION

PART 1 GENERAL

1.01 MOBILIZATION INCLUDES, BUT IS NOT LIMITED TO

A. Obtaining, transferring, and complying with required permits, as specified in Section 01 41 26, Permits.

B. Moving equipment required for operations onto Site.

1. Including equipment, personnel, supplies, and incidentals required for first month's operation.

C. Installing temporary construction power, wiring, and lighting facilities.

D. Providing onsite communication facilities.

E. Providing onsite sanitary facilities and potable water facilities as specified and as required by Laws and Regulations, and governing agencies.

F. Posting OSHA required notices and establishing safety programs and procedures.

G. Having CONTRACTOR's superintendent at Site full time.

H. Initial general condition items.

1. Bonds, insurance.
2. Moving in equipment.
3. Project sign(s).
4. Preparing approved preconstruction documentation, including, but not limited to, Site Specific Safety Plan, Baseline Schedule, and CONTRACTOR's Quality Control Plan.
5. Other required preconstruction tasks as the onsite construction operations begin.

PART 2 PRODUCTS (NOT USED)

PART 3 EXECUTION (NOT USED)

END OF SECTION

SECTION 01 74 13
PROGRESS CLEANING

PART 1 GENERAL

1.01 GENERAL

A. In accordance with General Conditions, as may be specified in other Specification sections, and as required herein.

PART 2 PRODUCTS (NOT USED)

PART 3 EXECUTION

3.01 GENERAL

A. Wet down exterior surfaces prior to sweeping to prevent blowing of dust and debris. At least weekly, sweep floors (basins, tunnels, platforms, walkways, roof surfaces), and pick up debris and dispose.

B. Provide approved containers for collection and disposal of waste materials, debris, and rubbish. At least weekly, dispose of such waste materials, debris, and rubbish offsite.

C. Sweep roadways, streets, and walkways affected by the work and adjacent to the work when necessary.

END OF SECTION

SECTION 01 77 00
CLOSEOUT PROCEDURES

PART 1 GENERAL

1.01 SUBMITTALS

A. Quality Control Submittals: Written procedures for maintaining and markup of record documents.

B. Informational Submittals:

1. Submit hydrostatic testing drain plan to the CONSTRUCTION MANAGER 60 days prior to hydrostatic testing. CONSTRUCTION MANAGER to submit to the Bureau of Reclamation for review and approval.
2. Submit with application for final payment.
   a. Record Documents: As required in General Conditions and this Section.
   b. Special bonds, Special Guarantees, and Service Agreements.
   c. Consent of Surety to Final Payment: As required in General Conditions.
   d. Releases or Waivers of Liens and Claims: As required in General Conditions.
   e. Releases from Agreements.
   f. Final Application for Payment.
   g. Extra Materials: As required by individual Specification sections.

1.02 RECORD DOCUMENTS

A. Quality Assurance:

1. Furnish qualified and experienced person, whose duty and responsibility shall be to maintain record documents.
2. Accuracy of Records:
   a. Coordinate changes within record documents, making legible and accurate entries on each sheet of Drawings and other documents where such entry is required to show changes.
   b. Purpose of Project record documents is to document factual information regarding aspects of the Work, both concealed and visible, to enable future modification of the Work to proceed without lengthy and expensive Site measurement, investigation, and examination.
3. Make entries within 24 hours after receipt of information that a change in the Work has occurred.

4. Prior to submitting each request for progress payment, request CONSTRUCTION MANAGER's review and approval of current status of record documents. Failure to properly maintain, update, and submit record documents may result in a deferral by CONSTRUCTION MANAGER to recommend whole or any part of CONTRACTOR's Application for Payment, either partial or final.

1.03 RELEASES FROM AGREEMENTS

A. Furnish CONSTRUCTION MANAGER written releases from property owners or public agencies where side agreements or special easements have been made, or where CONTRACTOR's operations have not been kept within the UTILITIES construction right-of-way or easement.

B. In the event CONTRACTOR is unable to secure written releases:

1. Inform CONSTRUCTION MANAGER of the reasons.
2. UTILITIES and CONSTRUCTION MANAGER will examine the Site, and direct CONTRACTOR to complete the Work that may be necessary to satisfy terms of the side agreement or special easement.
3. If CONTRACTOR refuses to perform this Work, UTILITIES reserves right to have it done by separate contract and deduct cost of same from Contract Price, or require CONTRACTOR to furnish a satisfactory bond in a sum to cover legal Claims for damages.
4. When UTILITIES and CONSTRUCTION MANAGER are satisfied that the Work has been completed in agreement with Contract Documents and terms of side agreement or special easement, right is reserved to waive requirement for written release if:
(i) CONTRACTOR's failure to obtain such statement is due to grantor's refusal to sign, and this refusal is not based upon any legitimate Claims that CONTRACTOR has failed to fulfill terms of side agreement or special easement, or (ii) CONTRACTOR is unable to contact or has had undue hardship in contacting grantor.

PART 2 PRODUCTS (NOT USED)

PART 3 EXECUTION

3.01 MAINTENANCE OF RECORD DOCUMENTS

A. General:

1. Promptly following commencement of Contract Times, secure from CONSTRUCTION MANAGER, one complete set of Contract Documents. Drawings will be full size.

2. In addition to Contract Documents, maintain a record set of pipe lay drawings. Indicate sequence, location, and changes to each pipe section, fitting, or special.
3. Label or stamp each record document with title, "RECORD DOCUMENTS," in neat large printed letters.
4. Record information concurrently with construction progress and within 24 hours after receipt of information that change has occurred. Do not cover or conceal Work until required information is recorded.

B. Preservation:

1. Maintain documents in a clean, dry, legible condition and in good order. Do not use record documents for construction purposes.
2. Make documents and Samples available for observation by CONSTRUCTION MANAGER.

C. Making Entries on Drawings:

1. Using erasable colored pencils (not ink or indelible pencil), clearly describe changes by graphic lines and notes as required.
   a. Color Coding:
      1) Green when showing information deleted from Drawings.
      2) Red when showing information added to Drawings.
      3) Blue and circled in blue to show notes.
2. Date entries.
3. Call attention to entry by "cloud" drawn around area or areas affected.
4. Legibly mark to record actual changes made during construction, including, but not limited to:
   a. Depths of various elements in relation to finished grade where depth differs from that shown.
   b. Horizontal and vertical locations of existing and new underground facilities and appurtenances, and other underground structures, equipment, or Work. Provide reference measurements to at least two permanent surface improvements.
   c. Location of internal utilities and appurtenances concealed in the construction referenced to visible and accessible features of the structure.
   d. Locate existing facilities, piping, equipment, and items critical to the interface between existing physical conditions or construction and new construction.
   e. Changes made by Addenda and Field Orders, Work Change Directive, Change Order, and ENGINEER's written interpretation and clarification using consistent symbols for each and showing appropriate document tracking number.
5. Dimensions on Schematic Layouts: Show on record drawings, by dimension, the centerline of each run of items such as are described in previous subparagraph above.

a. Clearly identify the item by accurate note such as “cast iron drain,” “galv. water,” and the like.
b. Show, by symbol or note, vertical location of item (“under slab,” “in ceiling plenum,” “exposed,” and the like).
c. Make identification so descriptive that it may be related reliably to Specifications.

3.02 FINAL CLEANING

A. At completion of the Work or of a part thereof and immediately prior to request for certificate of Substantial Completion; or if no certificate is issued, immediately prior to notice of completion, clean entire Site or parts thereof, as applicable.

1. Leave the Work and adjacent areas affected in a cleaned condition satisfactory to CONSTRUCTION MANAGER.

B. Use only cleaning materials recommended by manufacturer of surfaces to be cleaned.

3.03 PIPELINE DRAINING

A. Pipeline Draining Requirements:

1. Drain S1 after passing hydrostatic testing. Submit hydrostatic testing drain plan. Include drain sequence plan and proposed temporary BMPs to the CONSTRUCTION MANAGER.
2. Remain onsite during draining operations.
3. Obtain required permits and permissions for draining operations.
4. Install temporary BMPs as required to protect areas downstream of discharge locations from erosion and damage.
5. Pipeline Draining Sequence:
   a. Open Temporary Blowoff isolation valve and drain the section of pipeline until the flow ends. Close isolation valve and do not remove temporary blowoff until after draining the pipeline at the S1 point of beginning (POB).
   b. Drain the pipeline at the S1 POB through the lower outlet on the test bulkhead until flow ends. Discharging of drain water is only allowed in the unnamed drainage near the temporary blowoff location or to a water truck.
   c. Remove temporary blowoff piping and install blind flange. Restore area around the temporary blowoff and at the S1 POB.
   d. Drain the pipeline at the S1 point of end (POE) through the lower outlet on the test bulkhead into the lower outlet on the test bulkhead at the S2 POB. Coordinate draining the section of S1 pipeline through Blowoff S2-1 with UTILITIES. Blowoff S2-1 will not be available for use for draining activities until April 7, 2012.

e. With pump well blind flange installed, exercise isolation valves on Blowoffs S1-2, S1-3, S1-4, and S1-5 to 100 percent open and then 100 percent closed. Next, remove the pump well blind flange and pump out remaining water from the pump well. Replace the blind flange. Restore area around the blowoffs.

6. Remove temporary BMPs, restore drainage, riprap, or other areas damaged as a result of draining operations.

END OF SECTION

SECTION 01 78 23
OPERATION AND MAINTENANCE DATA

PART 1 GENERAL

1.01 SECTION INCLUDES

A. Information for the preparation, submission, and review of Operations and Maintenance (O&M) Data, as required by individual Specification sections.

1.02 DEFINITIONS

A. Preliminary Data: Initial and subsequent submissions to CONSTRUCTION MANAGER for ENGINEER's review.

B. Final Data: ENGINEER-accepted data, submitted as specified herein.

C. Maintenance Operation: As used on Maintenance Summary Form is defined to mean any routine operation required to ensure satisfactory performance and longevity of equipment. Examples of typical maintenance operations are lubrication, belt tensioning, adjustment of pump packing glands, and routine adjustments.

1.03 SEQUENCING AND SCHEDULING

A. Equipment and System Data:

1. Provide manuals for equipment and systems prepared by equipment manufacturer or system Supplier.
2. Preliminary Data:
   a. Do not submit until Shop Drawing for equipment or system has been reviewed and approved by ENGINEER.
   b. Submit prior to shipment date. Include copies of warranties, bonds, and service agreements if specified.
3. Final Data: Submit Instructional Manual Formatted data not less than 30 days prior to installation of equipment or system.

B. Materials and Finishes Data:

1. Preliminary Data: Submit at least 15 business days prior to request for final inspection.
2. Final Data: Submit within 10 business days after final inspection.

1.04 DATA FORMAT

A. Prepare preliminary data in the form of an instructional manual. Prepare final data in data compilation format on electronic media.

B. Instructional Manual Format:

1. Binder: Commercial quality, permanent, three-ring or three-post binders with durable plastic cover.
2. Size: 8-1/2 inches by 11 inches, minimum.
3. Cover: Identify manual with typed or printed title "OPERATION AND MAINTENANCE DATA, VOLUME NO. ____ OF ____," and list:
   a. Project title.
   b. Designate applicable system, equipment, material, or finish.
   c. Identity of separate structure as applicable.
   d. Identity of general subject matter covered in manual. Identity of equipment number and Specification section.
4. Title Page:
   a. CONTRACTOR name, address, and telephone number.
   b. Subcontractor, Supplier, installer, or maintenance contractor's name, address, and telephone number, as appropriate.
      1) Identify area of responsibility of each.
      2) Provide name and telephone number of local source of supply for parts and replacement.
5. Table of Contents:
   a. Neatly typewritten and arranged in systematic order with consecutive page numbers.
   b. Identify each product by product name and other identifying numbers or symbols as set forth in Contract Documents.
6. Paper: 20-pound minimum, white for typed pages.
7. Text: Manufacturer's printed data, or neatly typewritten.
8. Three-hole punch data for binding and composition; arrange printing so that punched holes do not obliterate data.
9. Provide material suitable for reproduction, with quality equal to original. Photocopying of material will be acceptable, except for material containing photographs.

C. Electronic Media Format:

1. Portable Document Format (PDF):
   a. After preliminary data has been found to be acceptable to ENGINEER, submit Operation and Maintenance data in PDF format on CD.
   b. Files to be exact duplicates of ENGINEER-accepted preliminary data. Arrange by specification number and name.
   c. Files to be fully functional and viewable in most recent version of Adobe Acrobat.

1.05 SUBMITTALS

A. Informational:

1. Data Outline: Submit two copies to CONSTRUCTION MANAGER of a detailed outline of proposed organization and contents of Final Data prior to preparation of Preliminary Data.
2. Preliminary Data:
   a. Submit five copies to CONSTRUCTION MANAGER for ENGINEER's review.
   b. If data meets conditions of the Contract:
      1) One copy will be retained by UTILITIES.
      2) One copy will be retained by CONTRACTOR.
      3) Two copies will be retained by CONSTRUCTION MANAGER.
      4) One copy will be retained in ENGINEER's file.
   c. If data does not meet conditions of the Contract, copies will be returned to CONSTRUCTION MANAGER and distributed as follows:
      1) Copies will be returned to CONTRACTOR with ENGINEER's comments (on separate document) for revision.
      2) ENGINEER's comments will be retained in ENGINEER's file.
      3) Resubmit five copies revised in accordance with ENGINEER's comments.
3. Final Data: Submit three copies to CONSTRUCTION MANAGER in format specified herein.

1.06 DATA FOR EQUIPMENT AND SYSTEMS

A. Content For Each Unit (or Common Units) and System:

1. Product Data:
   a. Include only those sheets that are pertinent to specific product.
   b. Clearly annotate each sheet to:
      1) Identify specific product or part installed.
      2) Identify data applicable to installation.
      3) Delete references to inapplicable information.
   c. Function, normal operating characteristics, and limiting conditions.
   d. Performance data, engineering data, nameplate data, and tests.
   e. Complete nomenclature and commercial number of replaceable parts.

f. Original manufacturer's parts list, illustrations, detailed assembly drawings showing each part with part numbers and sequentially numbered parts list, and diagrams required for maintenance.
g. Spare parts ordering instructions.

2. Charts of valve tag numbers, with the location and function of each valve.
3. Drawings: Supplement product data with Drawings as necessary to clearly illustrate:
   a. Format:
      1) Provide reinforced, punched, binder tab; bind in with text.
      2) Reduced to 8-1/2 inches by 11 inches, or 11 inches by 17 inches folded to 8-1/2 inches by 11 inches.
      3) Where reduction is impractical, fold and place in 8-1/2-inch by 11-inch envelopes bound in text.
      4) Identify Specification section and product on Drawings and envelopes.
   b. Relations of component parts of equipment and systems.
4. Instructions and Procedures: Within text, as required to supplement product data.
   a. Format:
      1) Organize in consistent format under separate heading for each different procedure.
      2) Provide logical sequence of instructions for each procedure.
      3) Provide information sheet for UTILITIES' personnel, including:
         a) Proper procedures in event of failure.
         b) Instances that might affect validity of guarantee or Bond.
   b. Installation Instructions: Including alignment, adjusting, calibrating, and checking.
   c. Operating Procedures:
      1) Startup, break-in, routine, and normal operating instructions.
      2) Safety precautions.
      3) Special operating instructions.
   d. Maintenance and Overhaul Procedures:
      1) Routine maintenance.
      2) Guide to troubleshooting.
      3) Disassembly, removal, repair, reinstallation, and re-assembly.
5. Guarantee, Bond, and Service Agreement: Within text, as required to supplement product data.

B. Maintenance Summary:

1. Compile individual Maintenance Summary for each applicable equipment item, respective unit or system, and for components or sub-units.

2. Format:
   a. Use Maintenance Summary Form bound with this section or electronic facsimile of such.
   b. Each Maintenance Summary may take as many pages as required.
   c. Use only 8-1/2-inch by 11-inch size paper.
   d. Complete using typewriter or electronic printing.
3. Include detailed lubrication instructions and diagrams showing points to be greased or oiled; recommend type, grade, and temperature range of lubricants and frequency of lubrication.
4. Recommended Spare Parts:
   a. Data to be consistent with manufacturer's Bill of Materials/Parts List furnished in O&M manuals.
   b. "Unit" is the unit of measure for ordering the part.
   c. "Quantity" is the number of units recommended.
   d. "Unit Cost" is the current purchase price.

1.01 MATERIAL SAFETY DATA SHEETS (MSDS)

A. Provide MSDSs for chemicals that will become part of SDS and chemicals required for future maintenance.

1.02 SUPPLEMENTS

A. The supplements listed below, following "End of Section," are part of this Specification.

1. Forms: Maintenance Summary Form.

PART 2 PRODUCTS (NOT USED)

PART 3 EXECUTION (NOT USED)

END OF SECTION

SUPPLEMENT

MAINTENANCE SUMMARY FORM

PROJECT:_____ CONTRACT NO.:_____

1. EQUIPMENT ITEM_____

2. MANUFACTURER _____

3. EQUIPMENT/TAG NUMBER(S) _____

4. WEIGHT OF INDIVIDUAL COMPONENTS (OVER 100 POUNDS)_____

5. NAMEPLATE DATA (hp, voltage, speed, etc.) _____

6. MANUFACTURER'S LOCAL REPRESENTATIVE _____

   a. Name_____ Telephone No. _____

   b. Address _____

7. MAINTENANCE REQUIREMENTS

Maintenance Operation Comments	**Frequency**	**Lubricant (If Applicable)**
List briefly each maintenance operation required and refer to specific information in manufacturer's standard maintenance manual, if applicable. (Reference to manufacturer's catalog or sales literature is not acceptable.)	List required frequency of each maintenance operation.	Refer by symbol to lubricant required.

8. LUBRICANT LIST

Reference Symbol	Shell	Exxon Mobile	Chevron Texaco	BP Amoco	Or Equal
List symbols used in No. 7 above.	List equivalent lubricants, as distributed by each manufacturer for the specific use recommended.				

9. RECOMMENDED SPARE PARTS FOR OWNER'S INVENTORY.

Part No.	Description	Unit	Quantity	Unit Cost
Note: Identify parts provided by this Contract with two asterisks.				

SECTION 01 91 14
EQUIPMENT TESTING

PART 1 GENERAL

1.01 DEFINITIONS

A. Functional Test: Test or tests in presence of CONSTRUCTION MANAGER and UTILITIES to demonstrate that installed equipment meets manufacturer's installation, calibration, and adjustment requirements and other requirements as specified.

B. Performance Test: Test or tests performed after any required functional test in presence of CONSTRUCTION MANAGER and UTILITIES to demonstrate and confirm individual equipment meets performance requirements specified in individual sections.

C. Unit Process:

1. As used in this section, a unit process is a portion of the facility that performs a specific process function, such as:
   a. Pipeline and appurtenance hydrostatic testing.
   b. Observe operation of valves during pipeline hydrostatic testing and draining of pipeline, including:
      1) Butterfly valves.
      2) Combination air release and vacuum valves.
      3) Ball valves.

1.02 SUBMITTALS

A. Informational Submittals: Functional and performance test results.

PART 2 PRODUCTS (NOT USED)

PART 3 EXECUTION

3.01 GENERAL

A. Testing Meetings: Schedule, in accordance with requirements of Section 01 31 19, Project Meetings, to discuss test schedule, test methods, materials, chemicals and liquids required, facilities operations interface, and UTILITIES involvement.

B. CONTRACTOR's Testing Representative:

1. Designate and furnish one or more personnel to coordinate and expedite testing.
2. Provide Testing Representative(s) during startup meetings and during testing and startup.

C. Provide temporary valves, gauges, piping, test equipment and other materials and equipment required for testing.

D. Provide Subcontractor and equipment manufacturers' staff adequate to prevent delays. Schedule ongoing work so as not to interfere with or delay testing.

3.02 EQUIPMENT TESTING

A. Preparation:

1. Complete installation before testing.
2. Furnish qualified manufacturers' representatives, when required by individual Specification sections.
3. Obtain and submit from equipment manufacturer's representative Manufacturer's Certificate of Proper Installation Form, in accordance with Section 01 43 33, Manufacturers' Field Services, when required by individual Specification sections.
4. Equipment Test Report Form: Provide written test report for each item of equipment to be tested, to include the minimum information:
   a. UTILITIES/Project Name.
   b. Equipment or item tested.
   c. Date and time of test.
   d. Type of test performed (Functional or Performance).
   e. Test method.
   f. Test conditions.
   g. Test results.
   h. Signature spaces for CONTRACTOR and CONSTRUCTION MANAGER as witness.
5. Cleaning and Checking: Prior to beginning functional testing:
   a. Calibrate testing equipment in accordance with manufacturer's instructions.
   b. Inspect and clean equipment, devices, connected piping, and structures to ensure they are free of foreign material.
   c. Lubricate equipment in accordance with manufacturer's instructions.
   d. Turn rotating equipment by hand when possible to confirm that equipment is not bound.

e. Open and close valves by hand and operate other devices to check for binding, interference, or improper functioning.
f. Adjust clearances and torque.
g. Test piping for leaks.

6. Ready-to-test determination will be by CONSTRUCTION MANAGER based at least on the following:
   a. Acceptable Operation and Maintenance Data.
   b. Notification by CONTRACTOR to CONSTRUCTION MANAGER of equipment readiness for testing.
   c. Receipt of Manufacturer's Certificate of Proper Installation, if so specified.
   d. Adequate completion of work adjacent to, or interfacing with, equipment to be tested.
   e. Availability and acceptability of manufacturer's representative, when specified, to assist in testing of respective equipment.
   f. Satisfactory fulfillment of other specified manufacturer's responsibilities.
   g. Equipment tagging complete.
   h. Delivery of spare parts and special tools.

B. Functional Testing:

1. Hydrostatic testing of pipeline in accordance with Section 33 05 01.02, Welded Steel Pipe and Fittings—Weld Before Backfill.
2. During hydrostatic testing, ensure proper operation of combination air release and vacuum valves and associated appurtenances.
3. During draining of pipeline, ensure proper operation of blowoffs, combination air release and vacuum valves, and associated appurtenances.

END OF SECTION

SECTION 02 24 32
BACKFILL GROUTING

PART 1 GENERAL

1.01 WORK INCLUDED

A. The work specified in this section includes requirements for filling the annular space between the outside of the carrier pipe installed in excavation support and the inside of the excavation support with Low-Density Cellular Concrete (LDCC) and filling the annular space between the outside of the riser pipe and the riser excavation with LDCC.

1.02 REFERENCE SPECIFICATIONS, CODES AND STANDARDS

A. American Concrete Institute (ACI):

1. ACI 523.1R, Guide for Cast-in-Place Low-Density Concrete.
2. ACI 523.3R, guide for Cellular Concretes Above 50 pcf, and for Aggregate Concretes above 50 pcf with Compressive Strengths Less-than 2500 psi.

B. ASTM International (ASTM):

1. C94, Specification for Ready-Mixed Concrete.
2. C138, Standard Test Method for Unit Weight, Yield, and Air Content (Gravimetric) of Concrete.
3. C150, Specifications for Portland Cement.
4. C495, Standard Test Method for Compressive Strength of Lightweight Insulating Concrete.
5. C567, Standard Test Method for Unit Weight of Structural Lightweight Concrete.
6. C618, Specifications for Fly Ash and Raw or Calcined Natural Pozzolan for Use as a Mineral Admixture in Portland Cement Concrete.
7. C796, Standard Method of Testing Foaming Agents for Use in Producing Cellular Concrete Using Preformed Foam.
8. C869, Standard Specification for Foaming Agents Used in Making Preformed Foam for Cellular Concrete.

1.03 SUBMITTALS

A. Informational Submittals:

1. Qualifications: Qualifications of contractor or subcontractor personnel and manufacturer supplying and placing the LDCC.
2. Submit Backfill Grouting Plan in conjunction with the Tunneling Work Plan as specified in Section 31 71 31, Tunnel Excavation. Submit work

plans for placing LDCC for both the pipe installed in the excavation support and the vertical riser pipe (separate work plans) including sequence of work, type(s) of equipment, location of equipment, placing procedures, (i.e., batching, mixing, and pumping location and procedures), pump line arrangement (including moving and breaking, arrangement of valves for collection of test specimens), maximum pipe length to be backfilled and end bulkhead details, method of determining LDCC levels placed or completion of void filling, communications provisions, methods for monitoring mix, testing procedures, and cleanup procedures. Include pumping pressures, pumping rates, volumes to be placed per day, theoretical annulus volume for actual excavation support ID and carrier pipe OD with adjustments for bells and spacers, injection locations, method of surveying or monitoring carrier pipe for movement during LDCC placement, maximum LDCC age before set initiation, maximum injection pressures, methods and approaches to prevent deformation of carrier pipe during LDCC placement, sequence of placement and staging of backfill lifts and pumping method in the work plan.

3. Pre-Placement Test Reports and Certifications:
   a. Proposed LDCC mix designs with mix data for the components, mix properties including air content and wet unit weight, and testing results including cured unit weight and compressive strength tests reports from a certified testing laboratory.
4. Daily reports and records of backfill grout placement, including but not limited to:
   a. Furnish to the CONSTRUCTION MANAGER a delivery ticket with the information stated in Section 16 of ASTM C94 with each batch of concrete before unloading at the site; except actual scale weights of materials.
   b. Submit to the CONSTRUCTION MANAGER a printout of the actual scale weights for the loads batched at the end of each working day.
   c. Volumes placed and lift (stage) heights achieved.
   d. Stationing of LDCC placement.
   e. Injection locations and pressures.
   f. Unit weight and air content testing results.
   g. Time of placement.
   h. Designation of cylinder samples prepared that day.
   i. Compressive strength tests reports from a certified testing laboratory.

B. Action Submittals:

1. Product Data:
   a. Submit mix designs for each LDCC mix proposed for use in conjunction with the Tunneling Work Plan as specified in Section

31 71 31, Tunnel Excavation. Show the ingredients of the mix design and include:

1) Type, brand, source, and amounts of cement, pozzolans, admixtures, and other additives.
2) Source and amount of water.
3) Combined grading of each mix design.
4) Specific gravity of the materials.
5) Results of required tests.

b. Submit material specifications and instructions for use of proposed concrete admixtures, including evidence from foam manufacturer that proposed admixtures are compatible with the foaming agent.

c. Air content, unit weight, and compressive strength test results for proposed mix design.

2. Equipment: Submit the following for each type of LDCC proposed:

a. Manufacturer's specifications and operation instructions for conveyance equipment.

1) Pump specifications.
2) Grout and air-release hose, valve, and port sizes and specifications.
3) Foam generators and ancillary equipment.

1.04 DEFINITIONS

A. Low-Density Cellular Concrete (Foam Grout) (LDCC): A lightweight cementitious material that contains stable air or gas cells uniformly distributed throughout the mixture and with a minimum air percentage of 20 percent.

PART 2 PRODUCTS

2.01 MATERIALS

A. Cement: Portland cement, ASTM C150, Type I or II.

B. Flyash: Not permitted.

C. Water: Use potable water free from deleterious amounts of alkali, acid, and organic materials which would adversely affect the setting time or strength of the backfill grout.

D. Admixtures: Admixtures may only be used when specifically approved by foaming agent supplier in writing.

E. Foaming Agent: Comply with ASTM C869 when tested in accordance with ASTM C796.

1. Manufacturers and Products:

a. Mearl Geofoam Liquid Concentrate; The Mearl Corporation, Roselle Park, NJ.
b. Foam Liquid Concentrate; Cellufoam Concrete Systems.
c. Or approved equivalent.

2.02 MIX DESIGN

A. General: Design LDCC mix in accordance with the requirements of Section 03 30 10, Structural Reinforced Concrete, ACI 523.1R, ACI 523.3R, and the additional requirements herein. Adjust mixes in the field as necessary to meet the requirements of these specifications. The foaming agent material manufacturer's field services representative shall approve changes to the mix designs.

B. Minimum 28-day Compressive Strength per ASTM C495: 200 psi.

C. Limiting Requirements: Unless otherwise specified, design and control each LDCC mix within the following limits:

1. Wet Density (unit weight): Wet density of the foam grout shall be not less than 50 pcf, at the point of placement.
2. Preformed Foam: Generate preformed foam by combining controlled quantities of air, water, and foaming agent under pressure. Retain preformed foam stability until the cement sets to form a self-supporting matrix. The resulting LDCC shall have essentially closed cell and low water absorptive characteristics. The concentration of foam agent shall be in accordance with the foaming agent material manufacturer's recommendations.
3. Admixtures: The admixture content, batching method, and time of introduction to the mix shall be in accordance with the manufacturer's recommendations for minimum shrinkage and for compliance with these specifications. Admixtures may be used when specifically approved by foaming agent material manufacturer and in accordance with their recommendations. No calcium chloride or admixture containing chloride from other than impurities from admixture ingredients will be acceptable.
4. Design and test a tentative mix in accordance with ASTM C796 for each consistency intended for use. These results will be compared with field test results to confirm consistent properties are obtained in the field. Test each mix as follows:
   a. Two sets of compression test cylinders (3 inches by 6 inches), three cylinders per set, shall be made from each proposed backfill grout mix. One set of three cylinders shall be tested at an age of 7 days and the other set shall be tested at an age of 28 days. Foam grout specimens shall be made, cured, stored, and tested in conformity with ASTM C495.

b. Determine total air content of each proposed foam grout mix in accordance with ASTM C796.
c. Determine unit weight of each proposed foam grout mix in accordance with ASTM C567.

2.03 EQUIPMENT

A. General:

1. Use equipment for mixing and injecting foam grout, which is designed for underground backfill grouting service. Maintain equipment in good operating condition, capable of satisfactorily mixing, agitating, and forcing LDCC into injection ports at a uniform flow rate under the required constant pressure.
2. Configure backfill grouting equipment so flushing can be accomplished with grout intake valves closed, with water supply valve open, and with grout pump running at full speed.
3. Provide an adequate inventory of spare parts or backup equipment to ensure that operable backfill grouting equipment is available during the work. Maintain sufficient quantities of spare pressure gauges, stop valves, and other wear parts on site.

B. Use a foam generator to produce a predetermined quantity of foam, which shall be injected into the mixer and blended with the cement slurry. The foam generator shall be timer-controlled to repetitively discharge a pre-selected quantity or to discharge continuously at a fixed rate. Test and calibrate foam generating equipment for dilution percentage, density, and volume output. Two types of foam generating systems, batch and continuous generating, are acceptable.

1. A batch system consisting of a tank in which the foam liquid concentrate and water are first premixed. This dilute solution is then discharged from either a pressurized tank or by means of a mechanical pump through a foam-making nozzle in which this solution is blended with compressed air in fixed proportions.
2. A continuous generating system container, which continuously draws the concentrate directly from its shipping container, automatically blends it with water and compressed air in fixed proportions, and forms the stable micro-bubbled foam.
3. Both types utilize foam refining columns or nozzles calibrated for foam quality and discharge rate. The foam nozzles may be timer-controlled to repetitively discharge preselected quantities or to discharge continuously at a fixed rate.
4. Propose distances and volumes and provide batching, mixing and pumping equipment compatible and of sufficient size and capacity to place LDCC.

5. Provide graphical or digital printout records of batch scale readings, accurate to 1 pound, of the dry mix ingredients before delivery to mixer.

C. Specially designed batch mixers may also be used in conjunction with surge hopper equipped pumps. Properly adjust the rates of mixing and pumping and obtain a continuous flow of foam grout at the point of placement.

D. Injection Hoses and Connections:

1. Use hose of proper type and diameter to withstand maximum injection pressures used.
2. At the point of injection, provide suitable valves and calibrated pressure gauges so that the pressure and grout flow at the grout hole may be regulated and monitored. Provide a meter to measure the total volume of LDCC pumped into each port. Provide at or very near the point of injection, a system of valves in the line transporting the grout that will allow easy access for collection of test specimens. Provide an automatic bypass valve set to the maximum pressure specified.
3. Provide injecting hoses and connections with a minimum of 1-1/2 inches and a maximum of 2-1/2 inches in diameter.
4. Provide suitable stop valves at collar of hole for use in maintaining pressure, as required, until LDCC has set.

2.04 QUALITY CONTROL

A. Qualifications:

1. Develop a mix design(s), and batching, mixing, handling and placing LDCC under tunnel and riser pipe conditions; have furnished and placed LDCC on at least three tunnels and at least 1 riser pipe of the general type and the size specified herein which have been in successful operation; and have a record of experience and quality of work using foam grout that is satisfactory to the CONSTRUCTION MANAGER.
2. May alternatively employ a manufacturer's representative to supervise supplying and placing of LDCC. The manufacturer's representative shall be capable of complying with the qualifications specified and shall be acceptable to the CONSTRUCTION MANAGER. The manufacturer's representative shall supervise LDCC operations including training the CONTRACTOR's personnel, mixing designs, and placement of LDCC in the tunnel.
3. Personnel Qualifications: Be fully qualified to perform the Work. Provide a superintendent with previous experience under similar ground and tunnel conditions, or the foam grout supplying and placing shall be under the supervision of the foaming agent supplier's representative.
4. Field Services: The foaming agent material manufacturer shall provide engineering field services to review the project and the material application prior to preparation; to approve the applicator, the material

used, the equipment, and the procedure to be used; to approve setup before production of LDCC; and to observe during initial application. The field representative of the material manufacturer shall submit, in writing, approvals of proposed material, equipment, application procedures, applicator, and setup before production.

PART 3 EXECUTION

3.01 GENERAL

A. Properly place LDCC as specified herein. Make the LDCC using preformed foam process equipment approved by the foaming agent material manufacturer.

B. Utilize methods for completely filling the annular space between carrier pipe and the excavation support and between the riser pipe and the vertical riser excavation in accordance with approved submittals. No standing water, soil, and debris will be allowed where LDCC is to be placed.

C. Construct bulkheads at the end of each reach of tunneled pipe to be backfilled. Construct a bulkhead at the base of the riser pipe, as required.

1. Construct bulkheads so the annular space will be completely backfilled.
2. Provide bulkheads that incorporate a minimum l-inch diameter drainpipe in the invert of the tunnel to facilitate drainage of water during LDCC backfilling. Securely cap and plug this pipe once LDCC begins to flow from the drain line.
3. Provide an opening in the tunnel crown through the high side bulkhead or via air release piping to allow entrapped air to escape. Provide vent outlets as required.

D. Inform the CONSTRUCTION MANAGER at least 24 hours in advance of the times and place where placement of LDCC is anticipated.

3.02 BATCHING AND MIXING

A. General: Conform to the requirements of accepted submittals and the foaming agent manufacturer's recommendations.

B. Mixing:

1. Mechanically mix LDCC to produce a uniform distribution of the materials with a suitable consistency and the specified limiting requirements. Avoid excessive mixing in order to reduce the possibility of changes in unit weight and consistency.
2. In batch mixing operations, follow the manufacturer's recommendations concerning the order of charging the mixer with the various ingredients. Monitor the as-cast unit weight at the point of placement. Allowance

should be made for additional mixing that may result from the method of placement, such as mechanical or pneumatic pumping, and for unit weight changes that may result from these methods.

3. Make provisions for continuous mixing operations for reasonably uniform and continuous rate of addition of mix components at appropriate positions in the mixing machine, and in the correct ratio, to assure uniformity and the specified limiting requirements at the point of placement.
4. Alternative methods for batching and mixing LDCC will be considered by and must be acceptable to the ENGINEER.

3.03 PLACING LOW-DENSITY CELLULAR CONCRETE

A. General Requirements: Completely fill void space outside of the carrier pipe and riser pipe with LDCC. Provide air release piping in the crown of the excavation support to allow displaced air and air lost from LDCC to escape and be replaced with LDCC. Place LDCC in accordance with approved submittals.

B. Accomplish backfilling of the annular space between the pipe and the excavation support and between the riser pipe and riser excavation by placing LDCC in one or more stages (lifts). Monolithic placements (one stage) may be acceptable, demonstrate that placement techniques will not induce movement of the pipe, pipe overstressing, pipe overheating, or excessive deformation. Place the LDCC through grout pipes installed within the annular space between the carrier pipe and excavation support or between the riser pipe and the riser excavation. Install multiple grout pipes to provide redundancy.

C. Locate pressure gauges of appropriate range for monitoring the backfill grout injection pressures in the line transporting the LDCC at the point of injection. Maintain injection pressure low enough to prevent pipe movement and do not exceed 15 psi at the point of injection for stages below the crown of the pipe. Do not exceed 60 psi injection pressure or a lower limit as submitted and approved by the ENGINEER at the point of injection for stages above the crown of the pipe.

D. Measure and record volume of LDCC injected and compare with the anticipated volume per foot of pipe backfilled.

E. Provide a means of direct communication between the injection point and the pump operator.

3.04 FIELD QUALITY CONTROL

A. General: Perform field control tests, including unit weight (wet density), air content tests, and compression tests, and submit the results submitted to the CONSTRUCTION MANAGER.

1. The frequency specified herein for each field control test is approximate. A greater or lesser number of tests may be made, as required by the CONSTRUCTION MANAGER.
2. Collect test specimens near the connection where the LDCC is being injected.
3. Assist the CONSTRUCTION MANAGER in obtaining additional test cylinders. Supply materials necessary for fabricating the test cylinders.
4. Provide at or very near the point of injection, a system of valves in the line transporting the LDCC, which will allow easy access for collection of test specimens without disconnecting the line from the outlet. Submit the valve arrangement to the CONSTRUCTION MANAGER.

B. Unit Weight: Make unit weight (wet density) tests from the first batch mixed each day, after a change in mix design, every 30 minutes during pumping, and from each batch of LDCC from which compression test cylinders are made. Determine unit weight in accordance with ASTM C567. Unit weight at the point of placement shall be within plus or minus 5 percent of the unit weight established for the mix design being placed. Adjust mix as required to obtain the specified wet density.

C. Air Content: Make an air content test from the first batch mixed each day, and from each batch of LDCC from which concrete compression test cylinders are made. Air content at the point of placement will be the difference between the wet density at the point of placement less the wet density at the point immediately before the addition of preformed foam. Determine air content in accordance with ASTM C138 except that vibration or rodding of the sample is not allowed.

D. Compression Tests: Make one set of four test cylinders (3 inches by 6 inches) for each shift when LDCC is placed. Make one additional set from each additional 200 cubic yards, or major fraction thereof, placed in one shift. Test two cylinders from each set at an age of 28 days.

1. Compressive strength of LDCC will be considered satisfactory if both of the following requirements are met:
   a. Average of three consecutive compressive strength tests equal or exceed the specified unconfined compressive strength.
   b. No individual compressive strength test (average of two cylinders) is below the specified unconfined compressive strength by more than 20 percent.

2. A strength test shall be the average of two compressive strengths of two cylinders made from the same concrete sample and tested at 28 days.
3. Make test cylinders in the field, cure and store in the laboratory, and test in accordance with ASTM C495.
4. Mark or tag each set of compression test cylinders with the date and time of day the cylinders were made, the location in the work where the LDCC represented by the cylinder was placed, batch number, unit weight (wet density), and the air content.

3.05 PROTECTION AND CLEAN UP

A. Take necessary precautions to protect and preserve the carrier pipe and the riser from damage. Repair damage to the pipes caused by or occurring during the backfilling operations.

B. Minimize spills and clean up spills that occur.

END OF SECTION

SECTION 02 40 00
TUNNELED CROSSINGS

PART 1 GENERAL

1.01 WORK INCLUDED

A. This section includes requirements for the tunneled installation of excavation support and construction of the associated shafts/pits and riser shafts. Base bids and select equipment based on the rock and groundwater conditions defined in this section. In no case will geotechnical reports take precedence over rock and groundwater conditions defined for the tunneled crossings and associated shafts/pits and riser shafts in this section.

1.02 SUBMITTALS

A. Informational Submittals:

1. Abandonment-Recovery Contingency Plan: Prepare an Abandonment Contingency Plan to handle the possibility that a tunneled crossing cannot be completed. Submit the Abandonment Contingency Plan concurrent with the Tunneling Work Plan in Section 31 71 31, Tunnel Excavation.

1.03 DEFINITIONS

A. Riser Pipe: Vertical segment of the pipeline that transitions from the tunneled crossing to the more shallow open cut portion of the pipeline.

B. Excavation support: As defined in Section 31 71 31, Tunnel Excavation.

1.04 DESIGN CRITERIA

A. Employ methods and equipment that will control surface settlement and heave above the tunnel to prevent damage to existing utilities, facilities, and improvements. Limit ground movements (settlement/heave) to values that do not cause damage or distress to surface features, utilities, or improvements. Repair damage to existing features, improvements, or utilities to the satisfaction of the CONSTRUCTION MANAGER.

B. Perform work in accordance with the license agreement between UPRR and UTILITIES. The allowable tunneling methods and excavation support shown in these Contract Documents have been reviewed and accepted by UPRR. Alternative tunneling method, tunnel diameter, or excavation support will require review and acceptance by UPRR and ENGINEER.

C. The allowable tunneling methods for each crossing are:

1. 66-inch cased crossing of UPRR: Mechanical tunnel excavation methods in accordance with Section 31 71 31, Tunneled Excavation.

D. Do not propose or utilize other tunneling method or excavation support without written permission from the ENGINEER. Alternative tunneling methods shall install excavation support that meets UPRR requirements and meets the intent of the allowable tunneling method. Demonstrate that the proposed alternate tunneling method is technically feasible, and will not result in additional settlement. Submit three examples of crossings of similar lengths and in similar soil or rock conditions where the proposed alternate was successfully completed. The alternative tunneling method description must be signed and sealed by a Professional Engineer registered in the State of Colorado, who attests to the suitability of the method and the degree to which it meets the above-described intent of the allowable tunneling method.

E. The allowable construction methods for the north riser shaft:

1. Bored installation of a shaft with a diameter not to exceed 84 inches and with no man-entry into the unsupported bore permitted in accordance with Section 31 75 28, Shaft Riser.
2. Conventional shaft excavation and support in accordance with Section 31 41 00, Shoring. Riser pipe installation and backfill in accordance with Section 31 75 28, Shaft Riser.

F. The allowable construction method for the south portal shaft:

1. Conventional shaft and pit excavation in accordance with Section 31 41 00, Shoring.

1.05 PERMITS

A. UTILITIES has obtained a conditional encroachment permit from UPRR.

B. Submit Tunneling Work Plan for UPRR review in accordance with 31 71 31, Tunnel Excavation. UTILITIES will obtain final license agreement after UPRR acceptance of Tunneling Work Plan.

C. Comply with permit requirements.

PART 2 PRODUCTS (NOT USED)

PART 3 EXECUTION

3.01 GENERAL REQUIREMENTS

A. The excavation support shall function as a casing through which the raw water pipeline shall be installed.

B. Subsurface conditions anticipated to be encountered during construction of the shafts, tunnels, and associated riser pipes are presented in Table 1. Base bids and develop schedules from this table.

C. Boring logs and laboratory test data associated with samples obtained from these borings are attached to this specification in Supplement 1. The data contained in the supplement is the only subsurface boring log and laboratory data the CONTACTOR may rely upon for the crossing and associated shafts and riser. In no case shall these data take precedence over the subsurface conditions defined in Table 1.

D. Blow counts obtained in the field were corrected for hammer type and sampler size, by multiplying field blow counts with the correction factors presented in Table 2. The soils are classified according to the Unified Soil Classification System (USCS) in accordance with ASTM D2487, including fines content and particle size, and the relative density or consistency is based on the correlations presented in Table 3. In addition, for fine-grained soils (clays and silts) the unconfined compressive strength is defined according to the consistency presented in Table 3.

E. Groundwater: The defined groundwater levels for the shafts and tunnel are presented in the applicable tables.

3.02 GEOTECHNICAL CONDITIONS

A. The primary purpose of the defined subsurface conditions presented herein is to establish a contractual understanding of the geotechnical conditions anticipated to be encountered during construction of the tunneled portions of the Project in order to provide a basis for bidding and to assist in resolution of disputes that may arise over subsurface conditions during tunneling. Secondarily, the definitions:

1. Present the geotechnical and construction conditions that formed the basis of tunnel design.
2. Provide information to assist the CONTRACTOR in evaluating requirements for excavating and supporting the ground.
3. Provide guidance to the CONSTRUCTION MANAGER in administering the Contract.

B. The defined subsurface conditions contained herein provide the basis for identifying geotechnical and geologic conditions that qualify as "Differing Subsurface or Physical Conditions," as defined in Article 4.03 of the General Conditions. The defined subsurface conditions contained within this Specification are not necessarily geotechnical fact. The defined conditions were developed using judgment to interpolate between borings and extrapolate beyond the boring logs and laboratory test data. The judgment applied in the interpolations and extrapolations reflects the view of UTILITIES and ENGINEER. Use the defined conditions for the subsurface

conditions and the surface conditions that can be observed during a Site visit as the basis for bids. It should be noted that the Project design was based on assumed construction methods and levels of workmanship. The behavior of the geologic materials present in the surface and subsurface excavations will be influenced by the CONTRACTOR's selected equipment, means, and methods.

C. The results of the Project geotechnical investigation applicable to the crossing are available in the Bidder's Library. If there are disagreements or ambiguities between the defined conditions presented in this Specification and the geotechnical data, this Specification takes precedence.

D. It is suggested that bidders have a geotechnical engineer or engineering geologist licensed in the State of Colorado review and explain the information to assure a complete understanding of the reported information as a basis for submitting a bid.

3.03 RISK ALLOCATION

A. Risks associated with subsurface conditions consistent with, or less adverse than, the conditions defined herein are allocated to the CONTRACTOR. The risk of higher construction costs associated with subsurface conditions more adverse than the conditions presented herein are accepted by UTILITIES. The definition of the subsurface conditions in the contract is not a warranty that the defined conditions will be encountered. The defined conditions are the contractual standard that UTILITIES and the CONTRACTOR will agree to use when interpreting the differing subsurface conditions or physical conditions clause, contained in the General Conditions.

B. In the event that CONTRACTOR believes more adverse conditions have been encountered, UTILITIES will negotiate with the CONTRACTOR for additional compensation to the CONTRACTOR if UTILITIES determines the following four conditions exist:

1. Notify UTILITIES of the differing conditions in writing in accordance with Article 10 of the General Conditions.
2. The actual subsurface conditions encountered are materially more adverse than the defined conditions.
3. Documentation that the subsurface conditions are more adverse than those defined and that the conditions materially and significantly increased the cost and/or time required to complete the Work.
4. Diligent efforts were made to complete the Work described in the Contract Documents, including changes to methods, equipment, labor, and materials made necessary by the more adverse conditions.

C. If the foregoing conditions are satisfactorily met, additional compensation will be negotiated in accordance with the requirements of Article 10 of the General Conditions.

3.04 DEFINED SUBSURFACE CONDITIONS

A. Unconfined Compressive Strength (UCS): A baseline histogram of UCS for Shale material is presented in Figure 1. For Limestone materials the baseline UCS is between a minimum value of 20,000 and a maximum value of 32,000 pounds per square inch (psi). For Clay (CL) materials the baseline UCS is between 40 and 80 psi. For Calcarenite materials the baseline UCS histogram is considered to be as shown in Figure 1 for the Shale material, although no specific UCS testing of Calcarenite-only materials were performed.

B. Cerchar Abrasivity Index (CAI): No CAI testing was performed during the subsurface exploration and laboratory testing program. Baseline values were determined from published literature. CAI will be less than 3.0 for subsurface materials encountered.

C. Bentonite: Soft bentonite lenses up to 4 inches in thickness will be encountered in the materials above El. 4833.0 feet.

D. Rock Quality Designation (RQD) values provided in Table 1 were determined in accordance with ASTM D6032, Test Method for Determining Rock Quality Designation (RQD) of Rock Core.

E. Recovery of the samples is not specifically defined in this section. Consult the boring logs in the Supplement for information regarding measured sample recovery.

F. A series of indicative durability tests were performed on five samples of shale and one sample of limestone from boring UPRR-1. The observations made during the testing are contained in Supplement 2.The shale materials will not deteriorate in the presence of air.

Table 1
Defined Subsurface Conditions –
Cased Crossing of 66-inch Pipeline

Depth (ft)	Elevation (ft)	Rock Type USCS Soil Type	RQD (%)
North Riser Shaft			
0.0 to 5.5	4963 to 4957.5	Limestone, thinly bedded	15-70
5.5 to 31.0	4957.5 to 4932.0	Interbedded Limestone and Shale, laminated	70-100 (0 from 4952.5 to 4951.0)
31.0 to 36.0	4932.0 to 4927.0	Shale, laminated	95

Table 1 Defined Subsurface Conditions – Cased Crossing of 66-inch Pipeline			
Depth (ft)	**Elevation (ft)**	**Rock Type USCS Soil Type**	**RQD (%)**
36.0 to 56.0	4927.0 to 4907.0	Shale, calcareous, interbedded with Calcarenite (cemented calcareous shell fragments and quartz sand), laminated	75-100
56.0 to 80.0	4907.0 to 4883.0	Shale, laminated	85-100
80.0 to 94.0	4883.0 to 4869.0	Shale, calcareous, interbedded with Calcarenite (cemented calcareous shell fragments and quartz sand), laminated	85-100
94.0 to 104.0	4869.0 to 4859.0	Shale, laminated	95-100
104.0 to 106.0	4859.0 to 4857.0	Shale, calcareous, interbedded with Calcarenite (cemented calcareous shell fragments and quartz sand), laminated	0
106.0 to 125.0	4857.0 to 4838.0	Shale, laminated	80-90
Groundwater will be at or below Elevation 4850 in the shaft			
South Portal Shaft			
0.0 to 13.0	4882 to 4869	Clay (CL) calcareous	
13.0 to 28.0	4869 to 4818	Shale, calcareous, laminated	30—80
		Groundwater will be at or below Elevation 4850 in the shaft/pit	
Tunnel			
The tunnel will start in laminated calcareous Shale. A layer of laminated calcareous Shale interbedded with Calcarenite is located above El. 4869.0 and will trend into the tunnel horizon starting at the crown and progressing to form the full tunnel face in the vicinity of Sta. 127+00. The laminated materials have beds that range from 1/8-inch to 18 inches in thickness. The RQD will range from 85 to 100, with an average value of 95 for the reach north of Sta. 125+00. The RQD will range from 30 to 80, with an average value of 60 for the reach south of Sta. 125+00 that has been subject to stress relief. The groundwater table will not be encountered during tunneling. Perched water zones and isolated seeps will be encountered. Steady state flow from these seeps of up to 0.2 gpm will occur along specific joints or bedding planes. Bedding is relatively flat, with a dip of up to 5 degrees to the south.			

Table 2 Summary of Correction Factors to Blow Counts – Shown on Boring Logs		
	Sampler	
Drive Method	Split Spoon 2 inch OD	Modified Colorado 3 inch OD
Automatic Trip Hammer	1.3	0.8

Table 3 Summary of Consistency or Relative Density			
Soil Type	**Description**	**Corrected SPT Blow Count (blows/ft)**	**Unconfined Compressive Strength (tons/ft2)**
Cohesive (silts, clays, limestone, and shale)	Very Soft	0-2	<0.25
	Soft	3-4	0.25-0.50
	Firm	5-8	0.50-1.00
	Stiff	9-15	1.00-2.00
	Very Stiff	16-30	2.00-4.00
	Hard	>30	4.00-12.00 (up to 250 for shale and limestone)
Noncohesive (sands and gravels)	Very Loose	0-4	Not Applicable
	Loose	5-10	
	Medium Dense	11-30	
	Dense	31-50	
	Very Dense	>50	

Figure 1
Histogram of Shale UCS

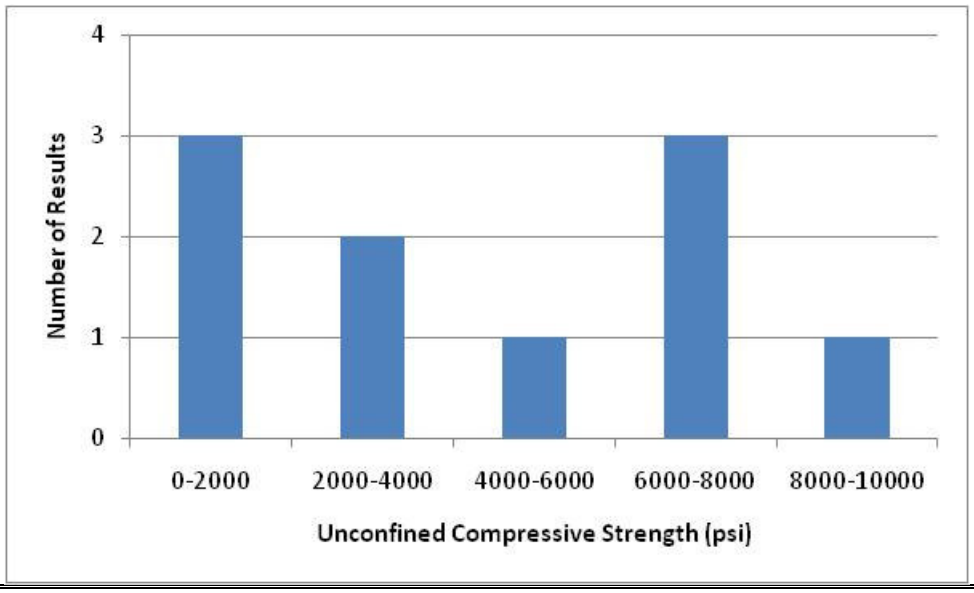

3.05 SUPPLEMENTS

A. The supplements listed below, following "End of Section," are part of this Specification.

1. Boring Logs and Laboratory Test Data.
2. Observations of UPRR-1 Core Samples Exposed to Water and Air.

END OF SECTION

SUPPLEMENT

Geotechnical
Environmental &
Water Resources
Engineering

GEI Consultants

LOG OF DRILL HOLE

PL-264

PAGE: 1 OF 1

DATE: 12/7/05 / 12/7/05

PROJECT NAME : Southern Delivery System

PROJECT NUMBER : 022950

BORING LOCATION : N 1164795.5, E 3224003.2

GROUND SURFACE ELEVATION (LOCAL - FT) : 4982.1

GROUNDWATER ELEVATION : DRY DATE 12/7/05

DRILLED BY HIGH PLAINS

LOGGED BY : NDM TOTAL DEPTH (FT) : 137.0

LEGEND

1) BLOWS PER 6 IN.-140 LB. HAMMER FALLING 30 IN. TO DRIVE SAMPLER
2) PEN - PENETRATION LENGTH OF SAMPLER OR CORE BARREL
3) REC - RECOVERY LENGTH OF SAMPLE

S - SPLIT SPOON SAMPLER 2.0 in. dia UF - FIXED PISTON
CA - CALIFORNIA SAMPLER 2.5 in. dia. ST - SHELBY TUBE

GROUNDWATER ▼ ESTIMATED GROUNDWATER ▽

NOTES: RIG: Track-mounted CME 75

6-inch diameter hollow stem auger

SAMPLE METHOD. Auto safety hammer

BACKFILL: Drill cuttings

DEPTH FT.	SAMPLE TYPE and NO.	- 1 - BLOWS PER 6 IN	- 2 - PEN IN.	- 3 - REC IN.	REMARKS	GRAPHIC LOG	SOIL AND ROCK DESCRIPTIONS
0							
	CA-1	30,20/3"	9	9			0.0 - 1.0 ft: CLAY WITH GRAVEL. Mostly fines, low plastic; about 30% - 40% gravel, up to 1 1/2-inch, predominately limestone; angular; very stiff; slightly moist; light brown to gray. (CL) [Qcr]
							1.0 - 8.0 ft: CALCAREOUS SHALE. Mostly fines, medium to highly plastic; less than 10% sand, fine grained, narrowly graded; laminated to very thinly bedded; moderately weathered; calcarous; soft; slightly moist; light gray to gray. [Kc]
	CA-2	21,19	12	12			
5							
							Convert to NX core with air rotary at 8.0 feet.
							See Geological Log of Drill Hole on following pages for descriptions between 8.0 and 137.0 feet.
10							

Geotechnical Environmental & Water Resources Engineering

GEI Consultants

GEOLOGICAL LOG OF DRILL HOLE

HOLE NO. **PL-264**

PROJECT NAME Southern Delivery System | PROJECT NO. 022950 | SHEET 1 OF 4

LOCATION N 1164795.5 E 3224003.2 | GROUND SURFACE ELEV. (FT) 4982.1 | TREND - | PLUNGE 90

DATE STARTED/FINISHED 12/7/05 / 12/9/05 | DRILLED BY HIGH PLAINS | LOGGED BY NDM

GROUNDWATER EL. DRY | DATE 12/8/05 | OVERBURDEN DEPTH (FT) 1.0 | TOTAL DEPTH (FT) 137.0

ELEVATION DEPTH (FT)	NOTES: GROUNDWATER CONDITIONS, DRILLING CONDITIONS	CORING (SEE LEGEND): INTERVAL	PENETRATION (FT)	RECOVERY (FT)	RQD (FT)	CORING TIME (MIN)	NO. OF PIECES	LONGEST (FT)	SHORTEST (FT)	HARDNESS	INSITU TESTING	JOINT DESCRIPTION (SEE LEGEND)	JOINT SYMBOL	GRAPHIC LOG	PERCENT RECOVERY	PERCENT RQD	ENGINEERING AND GEOLOGICAL DESCRIPTION AND CLASSIFICATION
10		NX 1	4.0	2.7	0	6	13	.25	<.1	H6					68	0	8.0 - 62.0 ft. CALCAREOUS SHALE. Mostly fines, medium to highly plastic; less than 10% sand, fine grained, narrowly graded; laminated to thinly bedded; moderately weathered; intensely fractured; calcarous; soft; slightly moist; light gray to gray. [Kc]
15		NX 2	5.0	3.8	2.8	15	8	1.2	<.1	H6					76	56	---- Moderately weathered; light gray
20		NX 3	5.0	4.8	1.9	15	10	.6	<.1	H6		10 deg			96	38	---- Intensely weathered; gray to dark gray.
																	---- Sand lense, fine to medium grained, narrowly graded, subangular; mostly quartz.
25		NX 4	5.0	4.8	2.8	15	14	.6	.1	H6					96	56	---- Moderately fractured; light gray to gray.
30	Loud core rattling.	NX 5	3.5	3.1	1.1	15	14	.4	<.1	H6					89	31	---- Intensely fractured; light gray with slight orange iron staining.
	Rattling; hard coring.	NX 6	1.5	1.5	1.5	22	3	.7	.1	H6					100	100	
35	Problems coring.	NX 7	3.0	3.0	1.0	30	11	.6	<.1	H6					100	33	---- Intensely to moderately fractured; gray.
		NX 8	2.0	1.5	0.8	14	5	.4	.1	H6					75	40	
		NX 9	3.0	3.0	0.8	17	14	.4	<.1	H6					100	27	
40		NX 10	2.0	1.3	0.4	14	4	.4	<.1	H6					65	20	
		NX 11	1.7	1.2	0.9	11	3	.5	.3	H6					71	53	
																	---- Moderately fractured, light gray to gray.

Geotechnical Environmental & Water Resources Engineering

GEI Consultants

GEOLOGICAL LOG OF DRILL HOLE

HOLE NO. **PL-264**

PROJECT NAME Southern Delivery System | PROJECT NO. 022950 | SHEET 2 OF 4

LOCATION N 1164795.5 E 3224003.2 | GROUND SURFACE ELEV (FT) 4982 1 | TREND - | PLUNGE 90

DATE STARTED/FINISHED 12/7/05 / 12/9/05 | DRILLED BY HIGH PLAINS | LOGGED BY NDM

GROUNDWATER EL. DRY | DATE 12/8/05 | OVERBURDEN DEPTH (FT) 1.0 | TOTAL DEPTH (FT) 137 0

ELEVATION / DEPTH (FT)	NOTES: GROUNDWATER CONDITIONS / DRILLING CONDITIONS	CORING (SEE LEGEND): INTERVAL	PENETRATION (FT)	RECOVERY (FT)	RQD (FT)	CORING TIME (MIN)	NO. OF PIECES	LONGEST (FT)	SHORTEST (FT)	HARDNESS	INSITU TESTING	JOINT DESCRIPTION (SEE LEGEND)	JOINT SYMBOL	GRAPHIC LOG	PERCENT RECOVERY	PERCENT RQD	ENGINEERING AND GEOLOGICAL DESCRIPTION AND CLASSIFICATION
45		NX 12	3.3	3.3	2.4	28	7	1.0	.2	H6					100	73	
50		NX 13	5.0	4.2	2.4	18	10	.8	<.1	H6					84	48	
55		NX 14	5.0	4.9	3.1	15	12	.8	.2	H6					98	62	
60		NX 15	5.0	4.8	3.9	18	12	.8	< 1	H6					96	78	---- Moderately fractured; light gray to gray with white very thinly bedded lenses.
65		NX 16	5.0	4.7	3.2	21	13	.8	.1	H6					94	64	62.0 - 112.0 CALCAREOUS SHALE. Mostly fines, medium to highly plastic; less than 10% sand, fine grained, narrowly graded; laminated to thinly bedded; moderately weathered; intensely fractured, calcarous; soft; slightly moist; gray to dark gray. [Kgh]
70		NX 17	5.0	4.6	2.7	23	13	.8	.1	H6					92	54	---- Laminated; dark gray. ---- Bottom 1.5 feet, gray to dark gray.
75		NX 18	5.0	5.0	4.2	21	8	1.1	.3	H6					100	84	---- From 72.7 to 73.8 feet, moist; gray to dark gray.
80		NX 19	5.0	5.0	4.8	15	8	1.0	.2	H6					100	96	---- Moderately fractured, dark gray.

Geotechnical Environmental & Water Resources Engineering

GEI Consultants

GEOLOGICAL LOG OF DRILL HOLE

HOLE NO. **PL-264**

PROJECT NAME: Southern Delivery System | PROJECT NO.: 022950 | SHEET 3 OF 4

LOCATION: N 1164795.5, E 3224003.2 | GROUND SURFACE ELEV. (FT): 4982.1 | TREND: - | PLUNGE: 90

DATE STARTED/FINISHED: 12/7/05 / 12/9/05 | DRILLED BY: HIGH PLAINS | LOGGED BY: NDM

GROUNDWATER EL: DRY | DATE: 12/8/05 | OVERBURDEN DEPTH (FT): 1.0 | TOTAL DEPTH (FT): 137.0

ELEVATION / DEPTH (FT)	NOTES: GROUNDWATER CONDITIONS, DRILLING CONDITIONS	CORING (SEE LEGEND): INTERVAL	PENETRATION (FT)	RECOVERY (FT)	RQD (FT)	CORING TIME (MIN)	NO. OF PIECES	LONGEST (FT)	SHORTEST (FT)	HARDNESS	INSITU TESTING	JOINT DESCRIPTION (SEE LEGEND)	JOINT SYMBOL	GRAPHIC LOG	PERCENT RECOVERY	PERCENT RQD	ENGINEERING AND GEOLOGICAL DESCRIPTION AND CLASSIFICATION
85		NX 20	5.0	4.8	4.8	11	5	1.5	.7	H6					96	96	---- Dark gray
90		NX 21	5.0	4.9	4.6	18	6	2.3	.2	H6					98	92	---- Gray to dark gray
95		NX 22	5.0	4.9	4.0	16	10	1.4	.1	H6					98	80	---- Gray to dark gray with light gray seams.
100	Sample crushed 99.7 to 100.2	NX 23	5.0	5.0	4.1	27	10	1.4	.2	H6/ H5					100	82	---- 97.0 to 99.7 feet, interbedded lenses; laminated, moderately soft; light gray to dark gray
105		NX 24	5.0	4.8	4.4	22	4	3.6	.2	H6/ H5					96	88	---- Moderately to slightly fractured; moderately soft; dark gray with thinly bedded light gray lenses.
110		NX 25	5.0	5.0	4.8	17	7	1.2	.1	H6/ H5					100	96	---- Moderately to slightly fractured; dark gray.
115		NX 26	5.0	4.4	3.0	15	13	.6	<.1	H6					88	60	112.0 - 137.0 SHALE. Mostly fines, medium to highly plastic; less than 10% sand, fine grained, narrowly graded; laminated to thinly bedded; moderately weathered; intensely fractured; soft; slightly moist; light gray to dark gray. (Kg) ---- Moderately fractured, slightly moist to moist, dark gray to black.

Geotechnical Environmental & Water Resources Engineering

GEI Consultants

GEOLOGICAL LOG OF DRILL HOLE

HOLE NO. **PL-264**

PROJECT NAME: Southern Delivery System | PROJECT NO.: 022950 | SHEET 4 OF 4

LOCATION: N 1164795.5, E 3224003.2 | GROUND SURFACE ELEV. (FT): 4982.1 | TREND: - | PLUNGE: 90

DATE STARTED/FINISHED: 12/7/05 / 12/9/05 | DRILLED BY: HIGH PLAINS | LOGGED BY: NDM

GROUNDWATER EL.: DRY | DATE: 12/8/05 | OVERBURDEN DEPTH (FT): 1.0 | TOTAL DEPTH (FT): 137.0

ELEVATION / DEPTH (FT)	NOTES: GROUNDWATER CONDITIONS / DRILLING CONDITIONS	CORING (SEE LEGEND): INTERVAL	PENETRATION (FT)	RECOVERY (FT)	RQD (FT)	CORING TIME (MIN)	NO. OF PIECES	LONGEST (FT)	SHORTEST (FT)	HARDNESS	INSITU TESTING	JOINT DESCRIPTION (SEE LEGEND)	JOINT SYMBOL	GRAPHIC LOG	PERCENT RECOVERY	PERCENT RQD	ENGINEERING AND GEOLOGICAL DESCRIPTION AND CLASSIFICATION
120		NX 27	5.0	4.5	0.8	15	21	.4	<.1	H6					90	16	---- Intensely fractured; slightly moist to moist; dark gray to black.
125		NX 28	5.0	4.7	3.3	19	12	.8	.1	H6					94	66	
		NX 29	3.0	3.0	2.3	20	6	1.4	.1	H6/ H7					100	77	---- Slightly moist; dark gray; bottom 0.8 feet; very soft; waxy; highly plastic; white to light gray.
130		NX 30	2.0	2.0	1.6	17	6	.8	.1	H6/ H7					100	80	---- Light gray to gray.
135		NX 31	5.0	5.0	4.5	21	7	1.6	.2	H6					100	90	---- Dark gray to black.
140																	
145																	
150																	

Geotechnical
Environmental &
Water Resources
Engineering

GEI Consultants

LOG OF DRILL HOLE

PL - 265

PAGE: 1 OF 1

DATE: 6/28/05 / 6/28/05

PROJECT NAME : Southern Delivery System

PROJECT NUMBER : 022950

BORING LOCATION : N 1164258.3, E 3224131.1

GROUND SURFACE ELEVATION (LOCAL - FT) : 4881.7

GROUNDWATER ELEVATION : DRY DATE 6/28/05

DRILLED BY : HIGH PLAINS

LOGGED BY : KGA TOTAL DEPTH (FT) : 29.0

LEGEND

1) BLOWS PER 6 IN.-140 LB. HAMMER FALLING 30 IN. TO DRIVE SAMPLER
2) PEN - PENETRATION LENGTH OF SAMPLER OR CORE BARREL
3) REC - RECOVERY LENGTH OF SAMPLE

S - SPLIT SPOON SAMPLER 2.0 in. dia UF - FIXED PISTON
CA - SPLIT SPOON SAMPLER 2.5 in. dia. ST - SHELBY TUBE

GROUNDWATER ▼ ESTIMATED GROUNDWATER ▽

NOTES: RIG: Truck mounted CME - 75

4-inch diameter solid flight augers

SAMPLE METHOD: Auto Safety Hammer

BACKFILL: Drill cuttings

DEPTH FT.	SAMPLE TYPE and NO.	- 1 - BLOWS PER 6 IN.	- 2 - PEN IN.	- 3 - REC IN.	REMARKS	GRAPHIC LOG	SOIL AND ROCK DESCRIPTIONS
0	CA-1	8,12	12	12			0.0 - 10.0 ft: CLAY. Mostly fines, medium plastic, about 10%-15% sand, fine grained, narrowly graded; very stiff; calcareous; voids present; slightly moist; brown. (CL) [Qcr]
5	CA-2	11,13	12	12			---- Pieces of shale & limestone in samples.
10	CA-3	50/7"	7	7	Stiffer and harder 11'		10.0 - 25.6 ft: CALCAREOUS SHALE. Mostly fines, medium to highly plastic; trace fine sand; laminated to thinly bedded; slightly weathered; soft; calcareous; fissile; dry; dark gray. [Kgh]
15	CA-4	50/6"	6	6			
20	CA-5	50/8"	8	8			
25	CA-6	50/7"	7	7			---- Dark gray; calcareous veins.
30							

Geotechnical
Environmental &
Water Resources
Engineering

GEI Consultants

LOG OF DRILL HOLE

PL-270

PAGE: 1 OF 1

DATE: 7/21/05 / 7/21/05

PROJECT NAME : Southern Delivery System

PROJECT NUMBER : 022950

BORING LOCATION : N 1164088 E 3224190

GROUND SURFACE ELEVATION (LOCAL - FT) :~4860

GROUNDWATER ELEVATION : DRY DATE 7/21/05

DRILLED BY : SPECTRUM EXPLORATION

LOGGED BY : KGA TOTAL DEPTH (FT) : 30.75

LEGEND

1) BLOWS PER 6 IN.-140 LB. HAMMER FALLING 30 IN. TO DRIVE SAMPLER
2) PEN - PENETRATION LENGTH OF SAMPLER OR CORE BARREL
3) REC - RECOVERY LENGTH OF SAMPLE

S - SPLIT SPOON SAMPLER 2.0 in. dia UF - FIXED PISTON
CA - SPLIT SPOON SAMPLER 2.5 in. dia. ST - SHELBY TUBE

GROUNDWATER ▼ ESTIMATED GROUNDWATER ▽

NOTES: RIG: Truck mounted CME - 55

4-inch diameter solid flight auger

SAMPLE METHOD: Auto Safety Hammer

BACKFILL: Drill cuttings

DEPTH FT.	SAMPLE TYPE and NO.	- 1 - BLOWS PER 6 IN.	- 2 - PEN IN.	- 3 - REC IN.	REMARKS	GRAPHIC LOG	SOIL AND ROCK DESCRIPTIONS
0							Pieces of limestone and lime shale on surface, dry.
							0.0 - 23.0 ft: CLAY. Mostly fines, medium plastic; about 10%-15% sand, fine grained, occasional angular coarse grains; stiff to very stiff; dry; light brown to brown to gray brown. (CL) [Qp]
5	CA-1	10,12	12	12	Angular 1 1/2 inch piece of calcareous shale in top of drive		
10	CA-2	8,10	12	12	Slightly darker More calcareous veins		---- Coarse sand sized pieces of rock
15	S-3	7,7,8	18	16			---- Coarse sand sized pieces; calcareous veins
					Scaping augers Hard		
20	CA-4	5,7	12	12			---- More sand, about 40%; fine to coarse gravel.
					Scaping augers Stiff at 23'		
							23.0 - 30.75 ft: SHALE. Mostly fines, medium to highly plastic; thinly bedded; moderately to intensely weathered; soft; slightly moist; calcareous; waxy; dark gray with some orange brown iron staining. [Kg]
25	S-5	12,23,37	18	18			---- 5 inch zone of clayey material in middle of sample; softer; orange.
					Scaping augers		
30	CA-6	32,50/3"	9	9			

LOG OF DRILL HOLE

Project Name: SDS S1
Project Number: 10108
Boring Location: N1164540, E3224149
Coordinate System: State Plane, Central NAD 83(86)
Ground Elevation: 4963 ft. (NGVD 1929)
Ground Water Depth: Not Measured
Ground Water Elevation: Not Measured **On Date:** 9/10/10

Boring/Hole #: UPRR-1 **Sheet:** 1 of 7
Starting Date: 9/8/10
Ending Date: 9/10/10
Plunge: 90 Degrees **Bearing:** N/A
Driller: High Plains Drilling **Logged By:** JDS
Total Depth: 125.5 ft
Overburden Depth: 0 ft

RJH CONSULTANTS, INC.

Notes: -Lithology between recovered samples is interpreted; contacts are approximate.
-CME-75 Truck Mounted Drill Rig.
-N-sized core.
-Holes backfilled with cement-bentonite grout.
-Locations and elevations are accurate to approximately 3 feet horizontally and 1 foot vertically.

Elevation (ft)	Depth (ft)	Notes: Groundwater Depth, Drilling Conditions,	Interval	Penetration (ft)	Recovery (ft)	Recovery (%)	RQD (ft)	RQD (%)	Coring Time (min)	No. of Pieces	Longest (ft)	Shortest (ft)	Hardness	In-situ Testing	Joint Description	Joint Symbol	Lithologic Symbol	Geologic and Engineering Description
4957.5	2, 4		0-5.5	5.5	1.2	22	1.0	18	5	3+	0.5	<0.1	H3					**0-5.5 ft: Limestone** Very thinly bedded; Slightly weathered; dry; gray with iron stains; strong reaction with HCL. [LINCOLN LIMESTONE MEMBER, GREENHORN LIMESTONE]
4952.5	6, 8, 10		5.5-10.5	5.0	3.4	68	3.4	68	20	2+	2.8	0.6	H3					**5.5-10.5 ft: Interbedded Limestone and Claystone** Limestone: Similar to 0-5.5ft except slightly to moderately fractured. Claystone: Laminated; mostly fines, <5% sand; moderately to intensely weathered; slightly fractured; moist; dark gray to brown; calcite cementation; strong reaction with HCL. [LINCOLN LIMESTONE MEMBER, GREENHORN LIMESTONE]
4951.2			10.5-11.8	1.3	0.5	38	0.0	0	10.5	4+	0.15	<0.1	H3					**10.5-11.8 ft: Limestone** Similar to 0-5.5 ft except: Very intensely weathered. [LINCOLN LIMESTONE MEMBER, GREENHORN LIMESTONE]
	12, 14, 16, 18, 20	Moved borehole approximately 4 ft to north and redrilled 0-25 ft using air-rotary with down-hole hammer. Set PVC casing.																**11.8-25.0 ft: Interbedded Limestone and Claystone** No recovery.

LOG OF DRILL HOLE

Project Name: SDS S1

Project Number: 10108

Boring/Hole #: UPRR-1

Starting Date: 9/8/10

Ending Date: 9/10/10

RJH CONSULTANTS, INC.

Elevation (ft)	Depth (ft)	Notes: Groundwater Depth, Drilling Conditions, Hole Completion, Etc.	Interval	Penetration (ft)	Recovery (ft)	Recovery (%)	RQD (ft)	RQD (%)	Coring Time (min)	No. of Pieces	Longest (ft)	Shortest (ft)	Hardness	In-situ Testing	Joint Description	Joint Symbol	Lithologic Symbol	Geologic and Engineering Description
	22																	
	24																	
4938.0		Begin rock coring.	25.0-26.0	1.0	1.0	100	1.0	100	2	5+	0.7	<0.1	H5-H7		Moderately open, trace of gypsum crystals			**25.0-31.0 ft: Interbedded Limestone and Claystone** Claystone: Laminated; mostly fines, low to medium plasticity, <5% sand, fine grained; moderately weathered; slightly fractured; moist; dark gray; strong reaction to HCL; H6-7; 0.5 to 1.5-ft thick beds. Limestone: Compact crystalline carbonate; moderately bedded; slightly to moderately weathered; moderately to slightly fractured; slightly moist; light gray; strong reaction to HCL; H5; 0.5 to 1.4-inch beds. [LINCOLN LIMESTONE MEMBER, GREENHORN LIMESTONE] 26.8-27.1: Bentonite layer: Mostly fines, high plasticity; wet; light gray; H7.
	26																	
	28		26.0-31.0	5.0	4.9	98	4.5	90	7	8+	4.5	<0.1	H5-H7		Tight to slightly open, smooth to slightly rough, very thin clay and oxidation, 30 degrees 90 degrees			
	30																	
4932.0																		**31.0-36.0 ft: Claystone** Laminated; mostly fines, low to medium plasticity; <5% sand, fine grained; fresh to slightly weathered; slightly to unfractured; moist; dark gray; strong reaction with HCL; trace pyrite; trace gypsum; trace calcite lenses <1/16-inch thick; trace fossils; H6. [GRANEROS SHALE]
	32																	
	34		31.0-36.0	5.0	5.0	100	4.7	94	5	9	5.0	.1	H6					
4927.0	36																	**36.0-56.0 ft: Interbedded Claystone and Sandstone** Claystone: Laminated; mostly fines, low to medium plasticity; <5% sand, fine grained; fresh to slightly weathered; slightly to unfractured; moist; dark gray; strong reaction with HCL; 1/8-inch to 1.7-ft thick beds; H6. Sandstone: Mostly sand, medium to fine grained; <15% fines; slightly weathered, moderately fractured; moist; gray; strong reaction with HCL; 1/8-inch to 0.1-ft thick beds; H4-5. [GRANEROS SHALE]
	36	Lost drilling circulation.	36.0-41.0	5.0	5.0	100	4.7	94	7	10	3.2	<0.1	H4-H6		Smooth to slightly rough, trace of pyrite crystals			
	40																	

LOG OF DRILL HOLE

Project Name: SDS S1

Project Number: 10108

Boring/Hole #: UPRR-1

Starting Date: 9/8/10

Ending Date: 9/10/10

RJH CONSULTANTS, INC.

Elevation (ft)	Depth (ft)	Notes: Groundwater Depth, Drilling Conditions, Hole Completion, Etc.	Interval	Penetration (ft)	Recovery (ft)	Recovery (%)	RQD (ft)	RQD (%)	Coring Time (min)	No. of Pieces	Longest (ft)	Shortest (ft)	Hardness	In-situ Testing	Joint Description	Joint Symbol	Lithologic Symbol	Geologic and Engineering Description
	62		60.5-65.5	5.0	4.9	98	4.9	98	6	3	5.0	0.8	H4-H6					64.0-64.2 ft: Bentonite similar to 26.8-27.1 ft.
	64																	
	66		65.5-70.5	5.0	5.0	100	4.6	92	5.5	7+	2.8	0.1	H4-H6					
	68																	
	70																	
	72		70.5-74.5	4.0	4.0	100	4.0	100	5	3	4.0	0.3	H4-H6					
	74														Tight, smooth, clean to very thin pyrite infill			
		Recovered remaining 0.3 ft of previous run.	74.5-76.0	1.5	1.5	100	1.5	100	2	3	1.5	0.6	H4-H6					
	76																	76.1-76.2 ft: Bentonite similar to 26.8-27.1 ft.
																		76.7 ft: Bentonite similar to 26.8-27.1 ft, 1/8-inch thick.
	78		76.0-81.0	5.0	5.0	100	4.3	86	7	8	4.3	<0.1	H4-H6					
4883.0	80																	

LOG OF DRILL HOLE

Project Name: SDS S1

Project Number: 10108

Boring/Hole #: UPRR-1 **Sheet:** 3 of 7

Starting Date: 9/8/10

Ending Date: 9/10/10

RJH CONSULTANTS, INC.

Elevation (ft)	Depth (ft)	Notes: Groundwater Depth, Drilling Conditions, Hole Completion, Etc.	Interval	Penetration (ft)	Recovery (ft)	Recovery (%)	RQD (ft)	RQD (%)	Coring Time (min)	No. of Pieces	Longest (ft)	Shortest (ft)	Hardness	In-situ Testing	Joint Description	Joint Symbol	Lithologic Symbol	Geologic and Engineering Description
	42																	
	44		41.0-46.0	5.0	5.0	100	5.0	100	5	9	5.0	<0.1	H4-H6					43.8-43.9 ft: Claystone intensely to very intensely weathered. 44.4-44.5 ft: Bentonite similar to 26.8-27.1 ft.
	46																	
	48		46.0-51.0	5.0	5.0	100	5.0	100	5	9	5.0	0.1	H4-H6					47.0-47.2 ft: Bentonite similar to 26.8-27.1 ft.
	50																	
	52																	51.2-51.4 ft: Bentonite similar to 26.8-27.1 ft.
	54		51.0-56.0	5.0	5.0	100	3.8	76	11	11	3.9	<0.1	H4-H6		Intact fracture with clay infill			53.7-53.8 ft: Claystone intense to very intensely weathered. 53.8-54.4 ft: Bentonite similar to 26.8-27.1 ft.
4907.0	56																	**56.0-80.0 ft: Claystone** Similar to 31.0-36.0 ft. [GRANEROS SHALE]
	58		56.0-58.8	2.8	2.8	100	2.8	100	5	1	2.8	0.7	H4-H6					58.1-58.8 ft: Bentonite similar to 26.8-27.1 ft.
	60	Recovered remaining 0.7 ft of previous run.	58.8-60.5	1.7	1.7	100	1.7	100	3	2	1.7	0.7	H4-H6		Tight to slightly open, smooth, clean			59.6-59.9 ft: Sandstone similar to 36.0-56.0 ft. 59.9-60.0 ft: Bentonite similar to 26.8-27.1 ft.

LOG OF DRILL HOLE

Project Name: SDS S1

Project Number: 10108

Boring/Hole #: UPRR-1 **Sheet:** 5 of 7

Starting Date: 9/8/10

Ending Date: 9/10/10

RJH CONSULTANTS, INC.

Elevation (ft)	Depth (ft)	Notes: Groundwater Depth, Drilling Conditions, Hole Completion, Etc.	Interval	Penetration (ft)	Recovery (ft)	Recovery (%)	RQD (ft)	RQD (%)	Coring Time (min)	No. of Pieces	Longest (ft)	Shortest (ft)	Hardness	In-situ Testing	Joint Description	Joint Symbol	Lithologic Symbol	Geologic and Engineering Description
																		80.0-94.2 ft: Interbedded Claystone and Sandstone Similar to 36.0-56.0 ft. [GRANEROS SHALE]
	82		81.0-86.0	5.0	5.0	100	5.0	100	7	20+	3.2	<0.1	H4-H6		Tight to slightly open, clean, slickensided 24 degrees 30 degrees			84.9-85.0 ft: Claystone intensely to very intensely weathered.
	84																	
	86																	
	88		86.0-91.0	5.0	5.0	100	5.0	100	8	6	5.0	0.3	H4-H6					
	90																	
	92		91.0-96.0	5.0	5.0	100	4.3	86	6	5+	2.7	<0.1	H4-H6		Tight to slightly open, clean, slickensided 40 degrees 45 degrees			93.7-94.0 ft: Gypsum veins, 1/16-inch thick, cutting across sandstone bedding. 94.0-94.2 ft: Bentonite similar to 26.8-27.1 ft.
4868.8	94																	**94.2-104.0 ft: Claystone** Similar to 31.0-36.0 ft except no gypsum; no fossils. [GRANEROS SHALE]
	96																	
	98		96.0-101.0	5.0	4.9	98	4.9	98	6	3	4.9	0.1	H6					
	100																	

LOG OF DRILL HOLE

Project Name: SDS S1

Project Number: 10108

Boring/Hole #: UPRR-1

Starting Date: 9/8/10

Ending Date: 9/10/10

RJH CONSULTANTS, INC.

Elevation (ft)	Depth (ft)	Notes: Groundwater Depth, Drilling Conditions, Hole Completion, Etc.	Interval	Penetration (ft)	Recovery (ft)	Recovery (%)	RQD (ft)	RQD (%)	Coring Time (min)	No. of Pieces	Longest (ft)	Shortest (ft)	Hardness	In-situ Testing	Joint Description	Joint Symbol	Lithologic Symbol	Geologic and Engineering Description
															Typical for 101.0-114.0 ft: Tight to slightly open, clean, slickensided			
	102														25 degrees 15 degrees 28 degrees			
			101.0-106.0	5.0	5.0	100	4.7	94	7	6+	1.8	0.1	H6					
4859.0	104														25 degrees 30 degrees 28 degrees 30 degrees 31 degrees			**104.0-106.0 ft: Interbedded Claystone and Sandstone** Similar to 36.0-56.0 ft. [GRANEROS SHALE]
4857.0	106														40 degrees			**106.0-125.5 ft: Claystone** Similar to 94.2-104.0 ft.[GRANEROS SHALE]
	108		106.0-111.0	5.0	4.9	98	4.2	84	7	7	2.0	0.2	H6					
	110														35 degrees 25 degrees 15 degrees			
	112														24 degrees			
			111.0-116.0	5.0	4.6	92	4.1	82	7	7	3.0	0.2	H6					
	114														25 degrees			
	116																	116.0-116.8 ft: Bentonite similar to 26.7-27.1 ft. 116.8-118.0: Gypsum veins; 1/16 to 1/8-inch thick. 117.1-117.2 ft: Bioturbated bedding. 117.8-117.9 ft: Sandstone similar to 36.0-56.0 ft. 119.3-119.4 ft: Gypsum veins; 1/16 to 1/8-inch thick..
	118		116.0-120.5	4.5	4.5	100	4.2	93	10	6	4.5	<0.1	H6					
	120																	

LOG OF DRILL HOLE

Project Name: SDS S1

Project Number: 10108

Boring/Hole #: UPRR-1 **Sheet:** 7 of 7

Starting Date: 9/8/10

Ending Date: 9/10/10

RJH CONSULTANTS, INC.

Elevation (ft)	Depth (ft)	Notes: Groundwater Depth, Drilling Conditions, Hole Completion, Etc.	Interval	Penetration (ft)	Recovery (ft)	Recovery (%)	RQD (ft)	RQD (%)	Coring Time (min)	No. of Pieces	Longest (ft)	Shortest (ft)	Hardness	In-situ Testing	Joint Description	Joint Symbol	Lithologic Symbol	Geologic and Engineering Description
	122																	
			120.5-125.5	5.0	5.0	100	4.6	92	10	3+	5.0	<0.1	H6					
	124																	
4837.5																		End of Log
	126																	
	128																	
	130																	
	132																	
	134																	
	136																	
	138																	
	140																	

TABLE 7-G.2.4C-3
SWELL/CONSOLIDATION AND SHEAR STRENGTH TEST RESULTS

			Swell/Consolidation Test Results					Shear Strength Test Results		
Borehole Number	Sample Depth (ft)	Description	Moisture Content (%)	Dry Density (pcf)	Pressure at Inundation (psf)	Percent Swell[1] (%)	Swell Pressure (psf)	Unconfined Compression Strength q_u (psf)[2]	Unconfined Compression Strength q_u (psi)[3]	Geologic Material Type
PL-201	11.3	Calcareous Shale	--	--	--	--	--	N/A	1,720	Kns
PL-201	21.8	Limestone (shaley)	--	--	--	--	--	N/A	5,130	Kns
PL-215	4.0	Shale	14.3	113.4	1,000	1.9	5,000	--	--	Kp
PL-235	9.0	Shale	10.4	108.3	1,000	0.8	1,300	--	--	Kp
PL-236	9.0	Clay	12.7	98.9	1,000	1.9	1,700	--	--	Qp
PL-239	4.0	Clay	8.6	107.3	1,000	1.3	1,500	--	--	Qcr
PL-240	19.0	Shale	12.0	115.5	1,000	2.8	6,200	--	--	Kp
PL-241	19.0	Shale	9.6	118.1	1,000	7.6	16,000	--	--	Kp
PL-264	14.5	Calcareous Shale	--	--	--	--	--	N/A	19,790	Kc
PL-264	42.0	Calcareous Shale	--	--	--	--	--	N/A	29,390	Kc
PL-264	69.7	Calcareous Shale	--	--	--	--	--	N/A	7,940	Kgh
PL-264	106.0	Calcareous Shale	--	--	--	--	--	N/A	9,740	Kgh
PL-264	125.0	Shale	--	--	--	--	--	N/A	4,200	Kg
FDS-302	20.0	Clay	16.7	112.6	1,000	3.7	5,000	--	--	Qcr
FDS-303	5.0	Shale	10.4	100.8	1,000	2.9	9,000	--	--	Kp
FDS-303	15.0	Shale	6.2	125.4	--	--	--	16,490	N/A	Kp
FDS-314	19.0	Shale	10.0	121.6	1,000	1.0	3,800	--	--	Kp
FDS-316	4.0	Clay with Sand	8.4	79.4	1,000	-1.4	N/A	--	--	Qes
FDS-319	1.0	Clay	5.9	69.4	1,000	-6.8	N/A	--	--	Qst
FDS-321	29.0	Shale	9.4	105.7	1,000	0.2	1,100	--	--	Kp
FDS-322	4.0	Sandy Clay	6.4	86.8	1,000	-4.0	N/A	--	--	Qst
FDS-323	19.0	Clay	20.0	107.7	1,000	1.0	4,000	--	--	Qcr
FDS-325	9.0	Shale	12.3	121.7	1,000	2.8	8,000	--	--	Kp
FDS-326	4.0	Clayey Sand	9.1	71.0	1,000	-2.4	N/A	--	--	Qst
FDS-329	9.0	Shale	10.2	108.4	1,000	0.7	1,600	--	--	Kp
FDS-330	14.0	Shale	11.3	99.2	--	--	--	20,807	N/A	Kp
FDS-331	14.0	Shale	12.5	122.2	1,000	4.1	17,000	--	--	Kp
FDS-332	14.0	Clay	9.6	104.7	1,000	1.3	1,400	--	--	Qp
FDS-334	4.0	Clay	6.8	89.2	1,000	-1.6	N/A	--	--	Qp
FDS-335	19.0	Clay	19.9	105.1	--	--	--	6,180	N/A	Qp
FDS-341	20.0	Clay with Sand	8.1	113.4	1,000	0.7	1,600	--	--	Qp
FDS-342	5.0	Clay with Sand	7.0	74.0	1,000	-11.1	N/A	--	--	Qp
FDS-343	1.0	Clay	8.2	82.8	1,000	-3.9	N/A	--	--	Qp
FDS-344	19.5	Limestone	--	--	--	--	--	N/A	24,820	Knf
FDS-346	12.5	Limestone	--	--	--	--	--	N/A	23,930	Knf
FDS-347	24.2	Limestone	--	--	--	--	--	N/A	21,190	Knf
TC-102	5.0	Clay	12.8	98.0	1,000	1.4	1,800	--	--	Qcr
TC-102	10.0	Clay	16.5	102.7	--	--	--	13,156	N/A	Qcr
TC-102	32.5	Shale	9.7	123.9	--	--	--	6,600	N/A	Kp

Borehole Number	Sample Depth (ft)	Description	Moisture Content (%)	Dry Density (pcf)	Grain Size Analysis			Clay Fraction[1] (%)	Atterberg Limits		USCS Classifi-cation	Geologic Material Type
					Gravel (%)	Sand (%)	Fines (%)		Liquid Limit (%)	Plasticity Index (%)		
TC-101	39.0	Widely Graded Gravel with Clay and Sand	--	--	65	26	9	4	--	--	GW-GC	Qst
TC-105	2.5	Widely Graded Sand with Clay and Gravel	--	--	24	71	5	4	--	--	SW-SC	Qp
TC-105	3.0	Silty Sand	--	--	9	62	29	9	28	2	SM	Qp
TC-105	15.0	Silty Sand with Gravel	--	--	25	59	16	1	--	--	SM	Qp
TC-105	32.5	Shale	14.5	--	--	--	--	--	27	13	--	Kp

Notes:
1. Finer than 0.005 mm
-- Not tested

TABLE 7-G.2.4A-4
SWELL/CONSOLIDATION AND SHEAR STRENGTH TEST RESULTS

Borehole Number	Sample Depth (ft)	Description	Swell/Consolidation Test Results					Shear Strength Test Results	Geologic Material Type
			Moisture Content (%)	Dry Density (%)	Pressure at Inundation (psf)	Percent Swell[1] (%)	Swell Pressure (psf)	Unconfined Compression Strength q_u (psi)	
PL-202	10.0	Calcareous Shale	--	148.7	--	--	--	1,500	Kns
PL-208	14.0	Shale	9.2	126.2	1,000	5.1	12,600	--	Kp
PL-210	19.0	Shale	13.5	129.8	1,000	5.1	12,600	--	Kp
PL-211	4.0	Clay with Sand	7.6	94.0	1,000	-6.9	N/A	--	Qcr
PL-213	4.0	Clayey Sand	8.8	79.7	1,000	-1.5	N/A	--	Qst
PL-213	24.0	Shale	10.3	113.2	1,000	1.3	3,100	--	Kp
PL-219B	49.0	Shale	8.3	125.6	1,000	0.1	1,400	--	Kp
PL-222B	39.0	Shale	12.1	109.7	1,000	2.2	3,200	--	Kp
PL-223	4.0	Clay	7.0	90.6	1,000	-1.1	N/A	--	Qes
PL-225	4.0	Clay	7.4	85.9	1,000	0.3	1,010	--	Qes
PL-226	4.0	Clay	11.1	102.6	1,000	0.6	1,200	--	Qp
PL-226	19.0	Shale	11.1	119.8	--	--	--	66	Kp
PL-227	14.0	Shale	11.3	98.3	1,000	4.1	3,000	--	Kp
PL-228	9.0	Clay	16.1	86.8	1,000	-1.6	N/A	--	Qp
PL-238	4.0	Clay with Sand	11.2	102.5	1,000	0.1	1,010	--	Qcr
PL-253	1.0	Clay	5.4	93.5	1,000	-2.2	N/A	--	Qst
PL-256	1.0	Clay	6.9	79.9	1,000	-1.8	N/A	--	Qst
PL-257	2.0	Limestone	--	153.7	--	--	--	8,800	Knf
PL-257	17.0	Sandstone	--	154.3	--	--	--	5,100	Knf
PL-259	12.0	Sandstone	--	135.9	--	--	--	4,400	Knf
PL-260	14.0	Shale	14.3	115.5	1,000	3.7	16,000	--	Kc
PL-263	4.0	Shale	6.5	100.3	1,000	-1.1	N/A	--	Kc
PL-265	15.0	Calcareous Shale	14.1	114.8	--	--	--	140	Kgh
PL-267	11.0	Sandstone	--	133.9	--	--	--	4,900	Kd
PL-267	21.0	Sandstone	--	135.6	--	--	--	8,800	Kd
PL-269	9.0	Sandstone	--	133.8	--	--	--	8,800	Kd

Borehole Number	Sample Depth (ft)	Description	Swell/Consolidation Test Results					Shear Strength Test Results	Geologic Material Type
			Moisture Content (%)	Dry Density (%)	Pressure at Inundation (psf)	Percent Swell[1] (%)	Swell Pressure (psf)	Unconfined Compression Strength q_u (psi)	
PL-270	5.0	Clay	3.8	107.5	1,000	-0.2	N/A	--	Qp
PL-270	30.0	Shale	12.0	113.7	1,000	2.9	9,000	--	Kg
FDS-301	9.0	Shale	14.9	118.0	1,000	1.9	7,300	--	Kp
FDS-306	30.0	Shale	12.2	123.2	1,000	2.1	8,000	--	Kp
FDS-307	14.0	Sandy Clay	16.6	101.2	1,000	1.9	4,800	--	Qp
FDS-308	9.0	Clay	15.1	100.8	1,000	3.7	6,100	--	Qp
FDS-348	14.0	Sandstone	--	149.1	--	--	--	7,000	Knf
FDS-357	19.0	Shale	14.4	107.8	--	--	--	75	Kg
FDS-358	1.0	Clay	8.5	99.1	1,000	0.2	1,100	--	Qcr
FDS-358	19.0	Shale	18.2	107.1	1,000	6.2	10,000	--	Kg
FDS-359	9.0	Shale	17.3	106.7	1,005	4.3	11,800	--	Kg
FDS-360	11.7	Sandstone	--	--	--	--	--	4,300	Kd
TC-101	9.0	Silty Sand	16.2	99.6	--	--	--	11	Qst
TC-101	14.0	Silty Clay	16.0	105.1	--	--	--	17	Qst
TC-101	22.0	Silty Clay	19.6	104.0	--	--	--	34	Qst
TC-101	32.0	Silty Clay	28.5	91.9	--	--	--	30	Qst
TC-101	34.0	Silty Clay	11.4	101.4	--	--	--	0.4	Qst

Notes:
1. Negative value indicates collapse upon wetting
N/A Not Applicable
-- Not tested

TABLE 7-G.2.4A-5
CORROSION TESTS

Borehole Number	Sample Depth (ft)	Description	Corrosion Test Results				Geologic Material Type
			pH	Resistivity (Ohm-cm)	Sulfates (%)	Chlorides (ppm)	
PL-203	9.0	Clay	8.2	330	0.09	9.0	Qp
PL-206	14.0	Clay	7.6	340	0.053	0.4	Qp
PL-210	9.0	Shale	4.0	460	0.122	0.8	Kp
PL-211	14.0	Shale	6.9	220	0.14	0.3	Kp
PL-223	9.0	Clay	8.0	850	0.06	90.0	Qes
PL-225	14.0	Widely Graded Sand with Clay	8.0	1700	0.04	2.9	Qst
PL-230	9.0	Sandy Clay	8.0	--	0.06	19.1	Qes
PL-233	14.0	Clayey Sand	8.1	420	0.61	2.8	Qp
PL-234	14.0	Silty, Clayey Sand	7.8	430	0.06	9.0	Qst
PL-237	9.0	Clay	7.7	1500	0.81	6.2	Qp
PL-245	4.0	Calcareous Shale	8.0	510	0.12	80.0	Kns
PL-245	14.0	Calcareous Shale	7.7	320	1.21	7.3	Kns
PL-246	4.0	Clay	8.0	510	0.12	80.0	Qst
PL-247	9.0	Clay with Sand	8.2	--	0.81	7.7	Qst
PL-252	1.0	Sandy Clay	7.7	280	0.13	40.0	Qst
PL-260	9.0	Shale	3.8	320	0.40	3.3	Kc
PL-262	9.0	Shale	8.2	180	0.20	15.7	Kc
PL-270	25.0	Shale	7.3	210	0.18	1.9	Kg

TABLE 20-A.3.4.1-3
Summary of Laboratory Test Results

Boring ID	Sample ID	Sample Depth Interval (ft)	Elevation at Top of Sample (ft)	Material Description	Moisture Content (%)	Dry Density (pcf)	Atterberg Limits LL	Gradation PI	Percent Gravel (+No. 4)	Percent Sand (-No. 4 to +No. 200)	% Fines (-No. 200)	Consol/Swell Test	UCS (psi)
Slocum Alluvium (Qs)													
FDS-351	S-2	5.0 – 6.5	5043	Lean Clay with Sand	8.5	--	29.4	12.2	4.8	22.7	72.5	--	--
Fort Hays Limestone Member, Niobrara Formation (Kf)													
FDS-350	Run 3	12.3 – 13.5	5058.7	Limestone	--	--	--	--	--	--	--	--	19,360
Codell Sandstone Member, Carlile Shale Formation (Kc)													
FDS-351	Run 1	18.5 – 19.1	5029.5	Sandstone	--	--	--	--	--	--	--	--	3,640
Fairport Chalky Shale Member, Carlile Shale Formation (Kc)													
FDS-S53	CA-3	14.3 – 15.0	4924.7	Shale	6.3	--	28.8	10.9	40.8	39.9	19.3	0.3% Consol. at 1198 psf	--
FDS-354	Run 2	13.0 – 13.2	4939	Bentonite Seam	--	--	94.5	73.0	--	--	--	--	--
FDS-354	Run 3	19.35 – 19.85	4902.65	Intbd. Sandstone and Shale	--	--	--	--	--	--	--	--	11,460
Lincoln Limestone Member, Greenhorn Limestone Formation (Kgh)													
UPRR-1	Chunk 1	Railroad Cut	-	Limestone	0.8	165	--	--	--	--	--	--	31,670
UPRR-1	Run 2	26.8 – 27.1	4936.2	Bentonite Seam	33.1	-	105	80.0	0	7.9	92.1	--	--
UPRR-1	Run 2	30.2 – 30.6	4932.8	Limestone	--	--	--	--	--	--	--	--	6,280
Graneros Shale (Kg)													
UPRR-1	Run 4	38.0 – 38.8	4925	Claystone	2.9	149	--	--	--	--	--	--	2,950
UPRR-1	Run 6	48.4 – 48.9	4914.6	Claystone	4.9	144							1,910
UPRR-1	Run 7	53.8 – 54.5	4909.2	Bentonite Seam	26.2	-	87.2	54.4	--	--	--	3.2% Swell at 1205 psf	410
UPRR-1	Run 15	82.7 – 83.5	4880.3	Claystone/Sandstone	2.6	160	--	--	--	--	--	--	7,680
UPRR-1	Run 23	120.5 – 121.2	4842.5	Claystone	5.3	143	--	--	--	--	--	--	2,740

Note:
1. "--" Represents not tested.

PL-201, NX-7, 33.0 – 36.5 ft

PL-264, NX-1, 8.0 – 12.0 ft

PL-264, NX-2, 12.0 – 17.0 ft

PL-264, NX-3, 17.0 – 22.0 ft

PL-264, NX-4, 22.0 – 27.0 ft

PL-264, NX-5, 27.0 – 30.5 ft

PL-264, NX-6, 30.5 – 32.0 ft

PL-264, NX-7, 32.0 – 35.0 ft

PL-264, NX-8, 35.0 – 37.0 ft

PL-264, NX-9, 37.0 – 40.0 ft

PL-264, NX-10, 40.0 – 42.0 ft

PL-264, NX-11, 42.0 – 43.7 ft

PL-264, NX-12, 43.7 – 47.0 ft

PL-264, NX-13, 47.0 – 52.0 ft

PL-264, NX-14, 52.0 – 57.0 ft

PL-264, NX-16, 62.0 – 67.0 ft

PL-264, NX-17, 67.0 – 72.0 ft

PL-264, NX-18, 72.0 – 77.0 ft

PL-264, NX-19, 77.0 – 82.0 ft

PL-264, NX-20, 82.0 – 87.0 ft

PL-264, NX-21, 87.0 – 92.0 ft

PL-264, NX-22, 92.0 – 97.0 ft

PL-264, NX-23, 97.0 – 102.0 ft

PL-264, NX-24, 102.0 – 107.0 ft

PL-264, NX-25, 107.0 – 112.0 ft

PL-264, NX-26, 112.0 – 117.0 ft

PL-264, NX-27, 117.0 – 122.0 ft

PL-264, NX-28, 122.0 – 127.0 ft

PL-264, NX-29, 127.0 – 130.0 ft

PL-264, NX-30, 130.0 – 132.0 ft

Photograph 7: Railroad cut through the interbedded limestone and claystone of the Greenhorn Limestone formation, near UPRR-1. The thicknesses of the limestone layers are between about 0.8 to 1.5 feet. The arrow points to a limestone layer.

Photograph 8: Drilling with pressurized air and a down-hole hammer through the interbedded limestone and claystone.

Photograph 9: UPRR-1, 31.0 to 36.0 feet bgs. Claystone of the Graneros Shale formation. Sample in top core barrel from 31.0 to 32.8 feet and in bottom of core barrel below 32.8 feet.

Photograph 10: UPRR-1, 41.0 to 46.0 feet bgs. Claystone with sandstone lenses.

Photograph 11: UPRR-1, 86.0 to 88.9 feet bgs. Interbedded claystone and sandstone of the Graneros Shale formation.

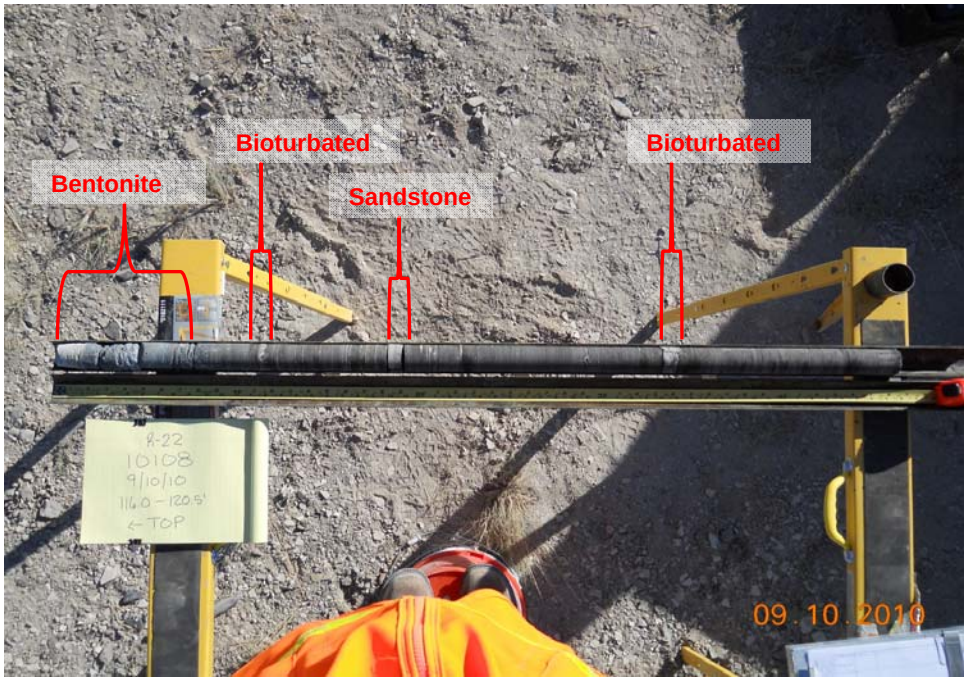

Photograph 12: UPRR-1, 116.0 to 120.5 feet bgs. Showing claystone with bentonite seam, sandstone lens, and bioturbated zones within the Graneros Shale formation.

SECTION 02 41 00
DEMOLITION OF STRUCTURES AND REMOVAL OR CROSSING OF ASBESTOS CEMENT PIPE

PART 1 GENERAL

1.01 REFERENCES

A. The following is a list of standards which may be referenced in this section:

1. American National Standards Institute (ANSI): A10.6, Safety Requirements for Demolition Operations.
2. ASTM International (ASTM): D698, Standard Test Methods for Laboratory Compaction Characteristics of Soil Using Standard Effort.
3. Colorado Air Regulation No. 8, Control of Hazardous Air Pollutants (5 [Code of Colorado Regulations] (CCR) 1001-10), Part B – Asbestos.
4. Colorado Department of Public Health and Environment (CDPHE): Hazardous Waste Regulations, 6 CCR 1007-3.
5. Environmental Protection Agency (EPA), U.S. Code of Federal Regulations (CFR), Title 40:
   a. Part 61—National Emission Standards for Hazardous Air Pollutants.
   b. Part 82—Protection of Stratospheric Ozone.
   c. Part 273—Standards for Universal Waste Management.
   d. Part 763, Subpart G, Asbestos Worker Protection.
6. Occupational Safety and Health Administration (OSHA), U.S. Code of Federal Regulations (CFR) Title 29 Part 1926—Occupational Safety and Health Regulations for Construction.

1.02 DEFINITIONS

A. ACM: Asbestos-containing material.

B. ACP: Asbestos Cement Pipe.

C. ACPM: Asbestos Cement Pipe Material.

D. Demolition: Dismantling, razing, destroying, or wrecking of any fixed building or structure or any part thereof.

E. Installation: Install equipment, including ancillary components required to make the equipment fully functional in the new location identified on the Drawings.

F. Modify: Provide necessary material and labor to modify an existing item to the condition indicated or specified.

G. Relocate: Remove, protect, clean and reinstall equipment, including electrical, instrumentation, and ancillary components required to make the equipment fully functional, to the new location identified on the Drawings.

H. Recycle/Recyclable: Remove and deliver to location(s) approved by CONSTRUCTION MANAGER the equipment, building materials, and other items identified to be recycled by UTILITIES. Items identified to be recycled will be marked by UTILITIES during a pre-bid site visit. Recyclable items identified to be disposed offsite shall become the property of the CONTRACTOR. Typical recyclable materials to be disposed offsite include, but are not limited to, fluorescent light bulbs, interior/exterior doors, garage doors, light fixtures, and plumbing fixtures.

I. Renovation: Altering a facility or one or more facility components in any way.

J. Salvage/Salvageable: Remove and deliver to location(s) approved by CONSTRUCTION MANAGER, the equipment, building materials, or other items so identified to be saved from destruction, damage, or waste; such property to remain that of UTILITIES. Unless otherwise specified, title to items identified for demolition shall revert to CONTRACTOR.

K. Universal Waste Lamp: In accordance with 40 CFR 273, the bulb or tube portion of an electric lighting device, examples of which include, but are not limited to, fluorescent, high-intensity discharge, neon, mercury vapor, high-pressure sodium, and metal halide lamps.

1.03 SUBMITTALS

A. Action Submittals: Submit proposed Demolition and Demolition/Installation Plans in accordance with requirements specified herein, for approval before such Work is started. The plan(s) may be submitted individually for each building and asbestos-cement pipe.

B. Informational Submittals:

1. Submit copies of notifications, authorizations and permits required to perform the Work.
2. Submit monthly reports listing items and item quantities for items that have been salvaged and recycled.
3. Submit a shipping receipt or bill of lading for containers of ACM shipped.

1.04 REGULATORY AND SAFETY REQUIREMENTS

A. When applicable, accomplish demolition Work in strict accordance with 29 CFR 1926-Subpart T; 29 CFR 1926.1101, General Construction Standards – Asbestos; and 29 CFR 1910.1001, General Industry Standards – Asbestos.

B. Comply with federal, state, and local hauling and disposal regulations. In addition to the requirements of the General Conditions, conform to ANSI A10.6 safety requirements.

C. Furnish timely notification of each demolition/installation project to applicable federal, state, regional, and local authorities in accordance with 40 CFR 61-Subpart M.

1.05 DEMOLITION AND DEMOLITION/INSTALLATION PLAN(S)

A. Demolition and Demolition/Installation Plan(s): Provide for safe conduct of the Work and include:

1. Detailed description of methods and equipment to be used for each operation;
2. Planned sequence of operations, including coordination with other work in progress;
3. Procedures for removal and disposition of materials specified to be salvaged or recycled.
4. Disconnection schedule of utility services.
5. Procedures for handling, testing, transporting, and disposal of materials that will be disposed offsite.
6. Estimated start and completion dates of demolition/renovation activities.
7. Records of communication and coordination activities conducted prior to and during development of the Demolition Plan(s) and Demolition/Installation Plan(s).

B. Residence/Structure Demolition Work:

1. For building demolition activities, include statements affirming inspection of the existing roof deck, floors, walls, and framing members, and their suitability to perform as a safe working platform or, if inspection reveals a safety hazard to workers, state provisions for securing the safety of the workers throughout the performance of the Work.
2. Submit to CONSTRUCTION MANAGER documentation confirming ACM compliance and notification prior to commencement with demolition activities in accordance with Colorado Air Regulation No. 8, Part B – Asbestos.

1.06 SEQUENCING AND SCHEDULING

A. Do not commence work until Demolition Plan(s) and Demolition/Installation Plan(s) has been approved by CONSTRUCTION MANAGER.

B. Coordinate and schedule activities in cooperation with UTILITIES, appropriate tenants, and appropriate stakeholders. Specific availability of each area for demolition or demolition/installation work will be negotiated on a case-by-case basis.

C. Sequencing and Constraints: As specified in Section 01 31 12, Project Coordination.

1.07 USE OF EXPLOSIVES

A. Use of explosives will not be allowed.

PART 2 PRODUCTS (NOT USED)

PART 3 EXECUTION

3.01 EXISTING FACILITIES TO BE DEMOLISHED OR RENOVATED

A. Notification: Notify CONSTRUCTION MANAGER 30 days prior to starting the work.

B. Submit a Demolition Notification Application Form and associated notification fee to the CDPHE at least 10 working days prior to commencement of the demolition activities.

C. Facilities:

1. Buildings scheduled for complete demolition are as shown.
2. Portions of buildings and other areas scheduled for selective demolition, partial demolition, and renovation Work are as shown on the Drawings.

D. Structures: Remove existing above-grade and below-grade structures as shown on the Drawings.

E. Utilities and Related Equipment:

1. Notify CONSTRUCTION MANAGER and appropriate utilities to turn off affected services at least 48 hours before starting demolition or installation activities.
2. Remove existing utilities as required and terminate in a manner conforming to the nationally recognized code covering the specific utility and approved by CONSTRUCTION MANAGER.

3. When utility lines are encountered that are not indicated on the Drawings, notify CONSTRUCTION MANAGER prior to further work in that area.
4. Completely excavate and remove utility lines serving buildings that are to be demolished.

F. Paving and Slabs: Completely remove paving and slabs.

G. Universal Waste Lamps and Thermostats: Manage, contain, package, label, and dispose of in strict accordance with 40 CFR 273.

3.02 PROTECTION

A. Existing Work:

1. Survey the site and examine the Drawings and Specifications to determine the extent of the Work before beginning any demolition or renovation.
2. Take necessary precautions to avoid damage to existing items scheduled to remain in place, to be reused, or to remain the property of UTILITIES; repair or replace CONTRACTOR-damaged items as directed by CONSTRUCTION MANAGER.

B. Facilities (for Renovated Properties):

1. Protect electrical and mechanical services and utilities. Where removal of existing utilities and pavement is specified or indicated, provide approved barricades, temporary covering of exposed areas, and temporary services or connections for electrical and mechanical utilities.
2. Determine if floors, roofs, walls, columns, pilasters, and other structural elements that are designed and constructed to stand without lateral support or shoring, are in stable condition. Facilities determined to be in stable condition shall remain standing without additional bracing, shoring, or lateral support until demolished, unless directed otherwise by the CONSTRUCTION MANAGER.
3. Protect facility elements not scheduled for demolition.
4. Provide interior shoring, bracing, or support to prevent movement, settlement, or collapse of structure or element to be demolished and adjacent facilities.

C. Protection of Personnel:

1. During demolition, continuously evaluate the condition of the structure being demolished and take immediate action to protect personnel working in and around the demolition site.
2. Provide temporary barricades and other forms of protection to protect UTILITIES' personnel and the general public from injury due to demolition Work.
3. Provide protective measures as required to provide free and safe passage of UTILITIES' personnel and the general public to occupied portions of the structure.

3.03 BURNING

A. Burning at the Site will not be permitted.

3.04 BACKFILL

A. Do not use demolition debris as backfill material.

B. Fill excavations, open basements and other hazardous openings to existing ground level or foundation level of new construction. Place earthfill in lifts of 12-inch maximum thickness and compact each lift to minimum 90 percent relative compaction as determined in accordance with ASTM D698.

3.05 TITLE TO MATERIALS

A. Salvaged equipment and materials become the property of CONTRACTOR, unless otherwise specified.

B. Title to equipment and materials resulting from demolition is vested in the CONTRACTOR upon approval by CONSTRUCTION MANAGER of CONTRACTOR's Demolition/Renovation Plan, and the resulting authorization by CONSTRUCTION MANAGER to begin demolition.

3.06 DISPOSITION OF MATERIAL

A. Do not remove equipment and materials without approval of CONSTRUCTION MANAGER.

B. UTILITIES will not be responsible for the condition or loss of, or damage to, such property after demolition begins.

C. Store salvaged items as approved by CONSTRUCTION MANAGER and remove them from UTILITIES' property before completion of the Contract. Do not display materials and equipment to prospective purchasers or sell on the Site.

3.07 UNSALVAGEABLE AND UNRECYCLABLE MATERIAL

A. Transport unsalvageable and unrecyclable material offsite and dispose of in accordance with federal, state, and local laws, regulations, and ordinances.

B. Asbestos Associated with Concrete Pipe and Structures:

1. Manage ACP, ACPM, ACM in soil incidental to ACP, and ACM associated with structures to be demolished in accordance with the following regulations:
   a. Colorado Air Regulation No. 8, Control of Hazardous Air Pollutants (5[Code of Colorado Regulations [CCR] 1001-10), Part B – Asbestos.
   b. 40 Code of Federal Regulations (CFR) Section 61, Subpart M, National Emission Standard for Asbestos.
   c. 40 CFR Section 763, Subpart G, Asbestos Worker Protection.
   d. Occupational Safety and Health Administration (OSHA), 29 CFR 1910.1001, General Industry Standards—Asbestos.
   e. OSHA-29 CFR 1926.1101, Construction Standards—Asbestos.
2. Obtain required permits for management and removal of ACP, ACPM and ACM from the CDPHE in accordance with Colorado Air Regulation No. 8, Part B – Asbestos.
3. ACP, ACPM and ACM Removal: Follow CDPHE guidelines for ACP, ACPM and ACM removal, including:
   a. Follow Colorado Air Regulation No. 8, Part B procedures for removing the ACP, ACPM and ACM.
   b. UTILITIES will provide asbestos surveys previously completed for the residences and/or associated structures identified in the Drawings to be demolished in accordance with Colorado Air Regulation No. 8, Part B. For any other structures scheduled for demolition as part of the Work not identified in the Drawings, UTILITIES will be responsible to obtain an asbestos survey for demolition purposes for each structure scheduled to be demolished. The asbestos surveys will be completed in accordance with Colorado Air Regulation No. 8, Part B by a State of Colorado certified, licensed asbestos building inspector. UTILITIES will provide copies of the asbestos survey reports for demolition notification purposes.

c. Submit a Demolition Notification Application Form and associated notification fee to the CDPHE at least 10 working days prior to commencement of the demolition activities.

d. Asbestos must be removed by a State of Colorado certified, licensed abatement contractor. Conduct air monitoring in accordance with federal and state regulations.

e. Asbestos must be removed without rendering the material friable and making the asbestos airborne.

f. It is assumed that soil around the ACP and soil 6 inches above the ACP is considered to potentially contain ACM and will need to be hand excavated, inspected, and disposed in accordance with CDPHE guidelines. Soil greater than 6 inches above the ACP is considered free of asbestos and can be used as backfill material after the ACP is abated.

4. Dispose ACP, ACPM and ACM at the following landfill location or another landfill permitted to accept asbestos by CDPHE upon approval by UTILITIES:

a. Waste Management Colorado Springs Landfill, 1010 Blaney Road, Colorado Springs, CO 80929.

3.08 CLEANUP

A. Remove and dispose of debris and rubbish in accordance with applicable regulations.

END OF SECTION

SECTION 02 42 00
RESTORATION AND CLEAN-UP

PART 1 GENERAL

1.01 SCOPE OF WORK

A. This section specifies site restoration and clean-up, which consists of construction and debris removal, site finishing, road clean-up during construction, and air pollution control.

1.02 EXISTING CONDITIONS

A. Existing site conditions shall be as determined in Section 01 31 13, Project Coordination, and Section 31 10 00, Site Clearing.

1.03 REGULATORY PERMIT REQUIREMENTS

A. Dust prevention, control of water, and other requirements affecting restoration and clean-up shall be as determined in Section 01 57 19, Temporary Environmental Controls.

PART 2 PRODUCTS (NOT USED)

PART 3 EXECUTION

3.01 SITE RESTORATION AND CLEAN-UP

A. Keep the construction areas clean and orderly during Work. On completion of the Work, repair damage caused by equipment. Leave the project site free of debris or excess material.

B. Remove excess excavated materials from the site and leave these surfaces in a condition equivalent to their original condition.

C. Reopen existing drainage ditches and culverts and restore the grade and natural drainage as soon as possible after disturbance. Restore culverts broken or damaged to their original condition and location.

D. Restore existing stock dams to their original grade, unless shown otherwise on the Drawings.

E. Restore existing irrigation channels and appurtenances to their original grade and condition. Restore culverts or other irrigation structures broken or damaged to their original condition and location.

F. Restore existing signs, markers, and mailboxes to their original condition and location as soon as possible after disturbance. Provide temporary until permanent replacements are made.

G. Restore fences and gates in accordance with Section 32 31 13, Chain Link and Orange Safety Fences and Gates, or Section 32 31 26, Wire Fences and Gates, as applicable.

H. Upon completion of the pipeline installation, regrade, rake, and drag disturbed areas, leaving them free from rocks, gravel, clay or any other foreign material and in suitable condition for revegetation in accordance with Section 32 91 13, Soil Preparation. Areas disturbed during construction are required to be restored to preconstruction grades and condition without any new enclosed depressions, unless otherwise shown. Restore finished surface and free from holes, ruts, rough spots, or other surface features detrimental to the road shoulder and borrow ditch areas.

I. Restore topsoil disturbed during construction to preconstruction conditions in accordance with Section 31 10 00, Site Clearing.

J. Remove temporary structures, rubbish, and waste materials upon completion of the Work.

K. Control air pollution from construction operations in accordance with Section 01 57 19, Temporary Environmental Controls.

3.02 ROAD CLEAN-UP DURING CONSTRUCTION

A. Clean spilled dirt, gravel, or other foreign material in public rights-of-way caused by the construction operations at the conclusion of each day's operation.

END OF SECTION

SECTION 02 44 00
SETTLEMENT MONITORING

PART 1 GENERAL

1.01 WORK INCLUDED

A. The Work specified in this section includes furnishing and installing settlement instrumentation to monitor ground movements around and above tunneled crossings and where otherwise shown. The Work includes, but is not limited to, installing surface settlement instrumentation and recording observations and measurements from the monitoring points on a periodic basis before, during, and after tunneling and excavation support installation.

1.02 SUBMITTALS

A. Informational Submittals:

1. Qualifications: Submit surveying personnel qualifications in accordance with the requirements herein.
2. Submit Settlement Monitoring Plan in conjunction with the Tunneling Work Plan as specified in Section 31 71 31, Tunnel Excavation:
   a. Schedule: Submit the proposed schedule for installing the monitoring points.
   b. Description of methods and materials for installing monitoring points.
   c. Drawings with locations of proposed monitoring points shown in plan and profile.
   d. Identify the procedures and frequency of measurements for each point.
   e. Procedures to be used to identify and communicate values that have exceeded the threshold values defined in this section.
3. Reports and Records:
   a. Within 72 hours following installation of the monitoring points (x, y, z), submit drawings and tabulated information in Microsoft Office Excel format showing the actual installed location, the identification number, the type, the installation date and time, the coordinates of the point, and the tip elevation and instrument length. Include details of installed instruments, accessories and protective measures including dimensions and materials used.
   b. At least 72 hours prior to commencement of nearby construction activities, including dewatering, submit pre-construction survey of existing conditions, documenting existing damage, distress, settlement, cracking, etc.. Include photographs, video, and written notes for each item or instance of damage or distress existing

before construction. Provide photographs and video in accordance with Section 01 32 34, Photographic and Video Documentation.

1.03 DEFINITIONS

A. Monitoring Points: Surface monitoring points as defined herein.

B. Surface Monitoring Point: Settlement monitoring point established as a reference for measuring elevation of the ground surface or structural element using survey methods accurate to within plus or minus 0.05 inch.

1.04 QUALITY CONTROL

A. Surveyor Qualifications: Perform surveying for establishing surface monitoring points by a professional Land Surveyor licensed in the State of Colorado with previous experience surveying for the detection of structural or surface deformations.

B. Install monitoring points shown on the Drawings, or as directed by the CONSTRUCTION MANAGER. Install additional monitoring points if directed by the CONSTRUCTION MANAGER.

C. Should actual field conditions prevent installation of instruments at the locations shown on the Drawings, or specified herein, obtain written acceptance from the CONSTRUCTION MANAGER for new instrument locations and elevations.

PART 2 PRODUCTS

2.01 MATERIALS

A. Surface Monitoring Point: Establish surface monitoring points by an inscribed marking or, unimproved areas, establish surface monitoring points by driving a 5/8-inch diameter by 30-inch long reinforcing bar flush with the ground. Provide each monitoring point with a tag or marking indicating the station and offset from centerline. Assign each point a unique identification number and protect from damage or burial. Flag each point so as to remain visible.

PART 3 EXECUTION

3.01 GENERAL

A. Install surface monitoring points at the locations shown on the Drawings, as described in these specifications, and as approved by the CONSTRUCTION MANAGER.

B. Perform a baseline survey of surface monitoring points at least 7 days prior to the commencement of construction activities within 100 feet of the monitoring point, including the start of dewatering.

C. Once tunneling commences, survey monitoring points located within 50 feet of the excavation face at least once for every 20 feet of installed excavation support and settlement monitoring points at least every other day while the shaft is open. Once tunneling operations and excavation support installation are complete and the shafts or trench backfilled, survey settlement monitoring points once every other day for a period of 1 week, and again at 14 days and 30 days after tunneling, excavation support installation, and shaft backfill is completed.

D. Provide access and assistance to the CONSTRUCTION MANAGER for obtaining additional monitoring data, as discussed herein and as requested by CONSTRUCTION MANAGER.

3.02 MONITORING POINT LOCATIONS

A. Establish surface monitoring points in accordance with the Drawings.

B. Install the monitoring points as close as practicable to the locations shown on the Drawings or as approved by the CONSTRUCTION MANAGER.

C. Locate and visually confirm utilities within 10 feet laterally of monitoring point locations, and protect utilities or relocate monitoring points as necessary to protect utilities. Follow accepted industry procedures for one-call notification (Utility Notification Center of Colorado) and visual confirmation of locations of adjacent utilities.

3.03 PROTECTION, MAINTENANCE, AND REPAIR

A. Protect the monitoring points from damage. Replace or repair damaged installations within 24 hours prior to continuing dewatering, excavation, or tunneling, unless permitted otherwise in writing by the CONSTRUCTION MANAGER.

3.04 RESPONSE VALUES

A. Response Values:

Site Feature	**Threshold Value (Action Required)**	**Response Value**	**Shutdown Value**
Surface Monitoring Points	0.10 inch V and H	0.20 inch V and H	0.25 inch V and H

B. When the survey indicates movement equal to the Threshold Value, meet with the CONSTRUCTION MANAGER to discuss construction means and methods to determine what changes, if any, will be made to better control ground movement. If the Threshold Value is reached, instrument readings will be taken by the CONSTRUCTION MANAGER on a daily basis until five consecutive working days of stabilized readings are observed, or more often as specified elsewhere in this section.

C. When the instruments indicate movement equal to the Response Value, actively control ground movement in accordance with the approved plan to prevent reaching the Shutdown Value. If the Response Value is reached, instrument readings will be taken by the CONSTRUCTION MANAGER on a daily basis until 5 consecutive working days of stabilized readings are observed, or more often as specified elsewhere in this section.

D. When the instruments indicate movement equal to the Shutdown Value, stop excavation Work immediately. Meet with the CONSTRUCTION MANAGER to develop a plan of action before excavation Work can be resumed.

3.05 ABANDONMENT OF INSTRUMENTS

A. Surface Monitoring Points: Keep the surface monitoring points in place on public property at the completion of the Work. Remove surface monitoring points on private property during the cleanup and restoration work, or as directed by the CONSTRUCTION MANAGER.

END OF SECTION

SECTION 03 30 10
STRUCTURAL REINFORCED CONCRETE

PART 1 GENERAL

1.01 REFERENCES

A. The following is a list of standards which may be referenced in this section:

1. American Concrete Institute (ACI):
   a. 301, Specifications for Structural Concrete.
   b. 305R, Hot Weather Concreting.
   c. 306.1, Standard Specification for Cold Weather Concreting.
   d. 318, Building Code Requirements for Structural Concrete and Commentary.
   e. 347, Guide to Formwork for Concrete.
   f. SP-66, Detailing Manual.
2. ASTM International (ASTM):
   a. A615/A615M, Standard Specification for Deformed and Plain Carbon-Steel Bars for Concrete Reinforcement.
   b. C31/C31M, Standard Practice for Making and Curing Concrete Test Specimens in the Field.
   c. C33, Standard Specification for Concrete Aggregates.
   d. C39/C39M, Standard Test Method for Compressive Strength of Cylindrical Concrete Specimens.
   e. C94/C94M, Standard Specification for Ready-Mixed Concrete.
   f. C150, Standard Specification for Portland Cement.
   g. C231, Standard Test Method for Air Content of Freshly Mixed Concrete by the Pressure Method.
   h. C260, Standard Specification for Air-Entraining Admixtures for Concrete.
   i. C311, Standard Test Methods for Sampling and Testing Fly Ash or Natural Pozzolans for Use as a Mineral Admixture in Portland-Cement Concrete
   j. C494/C494M, Standard Specification for Chemical Admixtures for Concrete.
3. Concrete Reinforcing Steel Institute (CRSI):
   a. Manual of Standard Practice.
   b. Recommended Practice for Placing Reinforcing Bars.
4. National Institute of Standards and Technology (NIST): Handbook 44, Specifications, Tolerances, and Other Technical Requirements for Weighing and Measuring Devices.
5. National Ready Mixed Concrete Association (NRMCA).

1.02 DESIGN REQUIREMENTS

A. Design formwork in accordance with ACI 347 and ACI 301 to provide specified concrete finishes.

B. When high range water reducer (superplasticizer) is used in concrete mix, design forms for full hydrostatic pressure per ACI 347.

C. Make joints in forms watertight.

D. Limit panel deflection to 1/240th of each component span to achieve tolerances specified.

1.03 SUBMITTALS

A. Action Submittals:

1. Reinforcing steel prepared in accordance with CRSI Manual of Standard Practice and ACI SP-66 Detailing Manual:
   a. Bending Lists.
   b. Placing Drawings.
2. Product Data: Admixtures, premolded joint filler, bonding agent, form release agent, curing compound, nonshrink grout, and patching materials.
3. Design Data: Complete data on the concrete mix design, including aggregate gradations and admixtures, in accordance with ASTM C94.
4. Detailed plan for cold weather curing and protection of concrete placed and cured in weather below 40 degrees F.
5. Detailed plan for hot weather placements including curing and protection for concrete placed in ambient temperatures over 80 degrees F.

B. Informational Submittals:

1. Manufacturer's application instructions for curing compound.
2. Ready-mix delivery tickets for each truck in accordance with ASTM C94/C94M, Section 14, including requirements 14.2.1 through 14.2.13.
3. Manufacturer's Certificate of Compliance:
   a. Portland cement.
   b. Admixtures.
   c. Fly ash (if used).
   d. Aggregates.
   e. Bonding agent.
   f. Patching materials.
4. Test Reports: Cylinder compressive test results for field cylinders.

1.04 QUALITY ASSURANCE

A. Concrete: Unless otherwise specified, meet the requirements of ACI 301 and ACI 318.

B. Hot Weather Concreting: Conform to ACI 305R.

C. Cold Weather Concreting: Conform to ACI 306.1.

D. Batch Plant: Currently certified by the National Ready Mixed Concrete Association.

1.05 DELIVERY, STORAGE, AND HANDLING

A. Unload, store, and handle bars in accordance with CRSI publication "Placing Reinforcing Bars."

PART 2 PRODUCTS

2.01 FORMWORK

A. Form Materials:

1. For exposed areas, use hard plastic finished plywood overlaid waterproof particle board, or steel in "new and undamaged" condition, of sufficient strength and surface smoothness to produce specified finish.
2. For unexposed areas, use new shiplap or plywood.
3. Earth cuts may be used for forming footings.

B. Form Release Agent: Release agent shall not bond with, stain, or adversely affect concrete surfaces, and shall not impair subsequent treatment of concrete surfaces when applied to forms. A ready-to-use water based material formulated to reduce or eliminate surface imperfections, containing no mineral oil or organic solvents. Environmentally safe, meeting local, state, and federal regulations and can be used in potable water facilities.

C. Beveled Edge Corner Strips: Nonabsorbent material, compatible with form surface, fully sealed on all sides prohibiting loss of paste or water between the two surfaces.

D. Form Ties:

1. Material: Steel.
2. Spreader Inserts:
   a. Conical or spherical type.
   b. Design to maintain positive contact with forming material.

c. Furnish units that will leave no metal closer than 1.5 inches to concrete surface when forms, inserts, and tie ends are removed.

3. Wire ties not permitted.

2.02 CONCRETE

A. Ready-Mixed Concrete: Mix and deliver concrete in accordance with ASTM C94/C94M, Option C.

B. Materials: Unless otherwise specified, in accordance with ACI 301.

1. Cementitious Materials:
   a. Portland Cement: ASTM C150, Type II.
2. Aggregates: Furnish from one source.
   a. Natural Aggregates:
      1) Free from deleterious coatings and substances in accordance with ASTM C33, except as modified herein.
      2) Free of materials and aggregate types causing popouts, discoloration, staining, or other defects on surface of concrete.
   b. Coarse Aggregate:
      1) Natural gravels, combination of gravels and crushed gravels, crushed stone, or combination of these materials containing no more than 15 percent flat or elongated particles (long dimension more than five times the short dimension).
      2) Limit deleterious substances in accordance with ASTM C33, Table 3 for exposed concrete.
   c. Fine Aggregates:
      1) Clean, sharp, natural sand.
      2) Materials Passing 200 Sieve: 4 percent maximum.
      3) Limit deleterious substances in accordance with ASTM C33, Table 1 with material finer than 200 sieve limited to 3 percent, coal and lignite limited to 0.5 percent.
   d. Mixing Water and Ice: In accordance with ASTM C1602/C1602M, clean and potable, maximum content of chloride ions shall be 500 ppm.
   e. Admixtures: Furnish from one manufacturer.
      1) Characteristics: Compatible with each other and free of chlorides or other corrosive chemicals.
      2) Air-Entraining: ASTM C260.
      3) Water-Reducing: ASTM C494/C494M, Type A or Type D.
      4) Superplasticizers: ASTM C494/C494M, Type F or Type G.
      5) Fly Ash: ASTM C618, Class F.

C. Mix Design:

1. Select and proportion ingredients using trial batches; sample, cure and test concrete mix through approved independent testing laboratory in accordance with ACI 301.
2. Minimum Allowable 28-day Compressive Field Strength: 4,500 psi when cured and tested in accordance with ASTM C31/C31M and ASTM C39/C39M.
3. Cementitious Content: 540 pounds per cubic yard, minimum.
4. 0.45 maximum water/cementitious material content ratio.
5. Coarse Aggregate Size: ASTM C33 No. 57
6. Slump Range: 3 inches to 5 inches for concrete without superplasticizers; 4-1/2 inches to 8 inches for concrete with superplasticizers.
7. Air Content:
   a. Test in accordance with ASTM C231.
   b. 6 percent plus or minus 1.5 percent, unless noted otherwise.
8. Water Reducers: Use in concrete.
9. High Range Water Reducers (Superplasticizers): Use at CONTRACTOR's option.
10. Fly Ash: Use at CONTRACTOR's option. Maximum 25 percent, minimum 15 percent of total weight of fly ash plus cement.
11. Truck Mixers: For every truck, test slump of samples taken per 12.5.1 of ASTM C94/C94M. Where specified slump is more than 4 inches, and if slump tests differ by more than 2 inches, discontinue use of truck mixer unless causing condition is corrected and satisfactory performance is verified by additional slump tests.
12. Mixing: Minimum 70 and maximum 270 revolutions of mixing drum. Nonagitating equipment is not allowed.

2.03 REINFORCING STEEL

A. Deformed Billet-Steel Reinforcing Bars: ASTM A615/A615M, Grade 60. Welding of reinforcing bars is not permitted.

B. Fabrication: Follow CRSI Manual of Standard Practice.

C. Bend bars cold.

2.04 ANCILLARY MATERIALS

A. Premolded Joint Filler:

1. Bituminous Type: ASTM D994 or ASTM D1751.
2. Sponge Rubber: Neoprene, closed-cell, expanded; ASTM D1056, Type 2C5, with compression deflection, 25 percent deflection (limits), 119 kPa to 168 kPa (17 psi to 24 psi) minimum.

B. Tie Wire:

1. Black, soft-annealed 16-gauge wire.
2. Nylon-, epoxy-, or plastic-coated wire.

C. Bar Supports and Spacers:

1. Use precast concrete bar supports and side form spacers, unless noted otherwise. Do not use other types of supports or spacers.
2. Design bar supports to have sufficient strength and stiffness to carry loads without failure, displacement, or significant deformation. Space bar supports so minimum concrete cover is maintained for reinforcing between supports.

D. Nonshrink Grout:

1. Nonmetallic, nongas-liberating.
2. Prepackaged natural aggregate grout requiring only the addition of water.
3. Aggregate shall show no segregation or settlement at fluid consistency at specified times or temperatures.
4. Minimum strength of fluid grout, 3,500 psi at 1 day, 4,500 psi at 3 days, and 7,500 psi at 28 days.
5. Manufacturers and Products:
   a. BASF Building Systems, Inc., Shakopee, MN; Master Flow 928.
   b. Five Star Products Inc., Fairfield, CT; Five Star Fluid Grout 100.
   c. Euclid Chemical Co., Cleveland, OH; Hi Flow Grout.
   d. Dayton Superior Corp., Kansas City, KS; Sure Grip High Performance Grout.
   e. Substitutions not permitted.

E. Curing Compound:

1. Water-based, high solids content nonyellowing curing compound meeting requirements of ASTM C309 except as noted below, or ASTM C1315.
   a. Moisture Loss: 0.40 kg per square meter per 72 hours maximum.
   b. Capable of meeting moisture retention at manufacturer's specified application rate.
2. Manufacturers and Products:
   a. BASF, Shakopee, MN; Masterkure.
   b. Euclid Chemical Co., Cleveland, OH; Super Diamond Clear VOX.
   c. WR Meadows, Inc., Hampshire, IL; VOCOMP-30.
   d. Vexcon Chemical, Inc.; Philadelphia, PA; Starseal 1315.
   e. Dayton Superior; Safe Cure and Seal 30%.

F. Bonding Agent:

1. Furnish two-component epoxy.
2. Consult manufacturer for surface finish, pot life, set time, vertical or horizontal application, and forming restrictions.
3. Manufacturers and Products:
   a. BASF Building Systems Inc., Shakopee, MN; Concresive.
   b. Euclid Chemical Co., Cleveland, OH; Euco Epoxy System.
   c. Sika Chemical Corp., Lyndhurst, NJ; Sikadur 32.

2.05 PATCHING MATERIAL (NONSTRUCTURAL)

A. Polymer-modified, cementitious based, chloride resistant, flowable, gray in color, working time of 20 minutes minimum. Provide bonding agent as recommended by manufacturer.

B. Manufacturers and Products:

1. BASF Building Systems, Shakopee, MN; MBT P&R Emaco R300 CI and R320 CI.
2. Sika Corp., Lyndhurst, NJ; SikaTop 123 Plus.

2.06 SOURCE QUALITY CONTROL

A. Cement: Test for total chloride content.

B. Fly Ash: Test in accordance with ASTM C311.

C. Batch Plant Inspection: Provide access to CONSTRUCTION MANAGER to inspect batch plants, cement mills, and supply facilities of suppliers, manufacturers, and Subcontractors, providing products included in these Specifications.

PART 3 EXECUTION

3.01 FORMWORK

A. Construction:

1. Construct forms and provide smooth-form finish in accordance with ACI 301 and ACI 347.
2. Form 3/4-inch bevels at concrete edges, unless otherwise shown.
3. Make joints tight to prevent escape of mortar and to avoid formation of fins.
4. Brace as required to prevent distortion during concrete placement.
5. On exposed surfaces locate form ties in uniform pattern or as shown.

6. Construct so ties remain embedded in the wall with no metal within 1 inch of concrete surface when forms, inserts, and tie ends are removed.

B. Form Removal:

1. Nonsupporting forms (walls and similar parts of Work) may be removed after cumulatively curing at not less than 50 degrees F for 24 hours from time of concrete placement if:
   a. Concrete is sufficiently hard so as not to sustain damage by form removal operations.
   b. Curing and protection operations are maintained.
2. Remove forms with care to prevent scarring and damaging the surface.
3. Prior to form removal, provide thermal protection for concrete being placed under the requirements of cold weather concreting.

3.02 PLACING REINFORCING STEEL

A. Unless otherwise specified, place reinforcing steel in accordance with CRSI Recommended Practice for Placing Reinforcing Bars.

B. Splices and Laps:

1. Top Bars: Horizontal bars placed such that 12 inches of fresh concrete is cast below in single placement.
2. Horizontal wall bars are considered top bars.
3. Lap splice reinforcing per Drawings, unless noted otherwise.
4. Tie splices with 18-gauge annealed wire as specified in CRSI Standard.

3.03 PLACING CONCRETE

A. Place concrete in accordance with ACI 301.

B. Prior to placing concrete, remove water from excavation and debris and foreign material from forms. Check reinforcing steel for proper placement and correct discrepancies.

C. Place concrete as soon as possible after leaving mixer, without segregation or loss of ingredients, without splashing forms or steel above, and in layers not over 2 feet deep. Place within 1-1/2 hours after adding cement to mix.

D. Eight feet maximum vertical drop to final placement, when not guided with chutes or other devices to prevent segregation due to impact with reinforcing.

3.04 COMPACTION

A. Vibrate concrete as follows:

1. Apply approved vibrator at points spaced not farther apart than vibrator's effective radius.
2. Apply close enough to forms to vibrate surface effectively but not damage from surfaces.
3. Vibrate until concrete becomes uniformly plastic.
4. Vibrator must penetrate fresh placed concrete and into previous layer of fresh concrete below.

3.05 HOT WEATHER

A. Prepare ingredients, mix, place, cure, and protect in accordance with ACI 305R.

B. Lift lines will not be visible in exposed concrete finishes for placement frequency.

C. Maintain concrete temperature below 85 degrees F at time of placement, or furnish test data or provide other proof that admixtures and mix ingredients do not produce flash set plastic shrinkage, or cracking as a result of heat of hydration. Cool ingredients before mixing to maintain fresh concrete temperatures as specified or less.

D. Provide for windbreaks, shading, fog spraying, sprinkling, ice, wet cover, or other means as necessary to maintain concrete at or below specified temperature.

1. Prevent differential temperature between reinforcing steel and concrete.

3.06 COLD WEATHER PLACEMENT

A. Do not place concrete when ambient temperature is below 40 degrees F or approaching 40 degrees F and falling, without special protection as specified or approved by CONSTRUCTION MANAGER.

B. Do not place concrete against frozen earth or ice, or against forms and reinforcement with frost or ice present.

C. Provide heated enclosures when air temperatures are below 40 degrees F.

D. Maintain surface temperature of concrete above 40 degrees F and cure concrete for minimum of 7 days.

E. Provide maximum and minimum thermometers placed on concrete surfaces spaced throughout Work to allow monitoring of concrete surface temperatures representative of Work.

F. In accordance with ACI 306.1 and ACI 301.

G. External Heating Units:

1. Vent heating units to atmosphere and do not locally heat or dry concrete. Where water cure is specified, maintain wet condition.
2. Do not exhaust heater flue gases (causes concrete carbonation as a result of concentrated carbon dioxide) directly into enclosed area.

3.07 CONSTRUCTION JOINTS

A. Locate as shown or as approved.

B. Maximum Spacing Between Construction Joints: 40 feet.

C. Prior to placement of abutting concrete, clean contact surface:

1. Remove laitance and spillage from reinforcing steel and dowels.
2. Roughen surface to minimum of 1/4-inch amplitude:
   a. Sandblast after concrete has fully cured.
   b. Water blast after concrete has partially cured.
   c. Green cut fresh concrete with high pressure water and hand tools.

3.08 PREMOLDED JOINT FILLER INSTALLATION

A. Sufficient in width to completely fill joint space where shown.

B. Drive nails approximately 1 foot 6 inches on center through filler, prior to installing, to provide anchorage embedment into concrete during concrete placement.

C. Secure premolded joint filler in forms before concrete is placed.

3.09 FINISHING

A. Floor Slabs and Tops of Walls:

1. Screed surfaces to true level planes.
2. After initial water has been absorbed, float with wood float and trowel with steel trowel to smooth finish free from trowel marks.
3. Do not absorb wet spots with neat cement.

B. Unexposed Slab Surfaces: Screed to true surface, bull float with wood float, and wood trowel to seal surface.

C. Tolerances: Variance of floors from level or true plane more than 1/4 inch in 10 feet when measured with a straightedge will not be allowed.

D. Exterior Slabs and Sidewalks:

1. Bull float with wood float, wood trowel, and lightly trowel with steel trowel.
2. Finish with broom to obtain nonskid surface.
3. Finish exposed edges with steel edging tool.
4. Mark walks transversely at 5-foot intervals with jointing tool.

3.10 FINISHING AND PATCHING FORMED SURFACES

A. Fill form tie holes with nonshrink grout.

B. Knock off projections exceeding 1/2-inch in height.

C. Leave surface with texture imparted by the forms.

D. Cut out honeycombed and defective areas.

E. Cut edges perpendicular to surface at least 1 inch deep. Do not feather edges. Soak area with water for 24 hours.

F. Patch with polymer-modified repair material. Follow manufacturer's application instructions.

G. Finish surfaces to match adjacent concrete.

H. Keep patches damp for minimum 7 days or spray with curing compound to minimize shrinking.

3.11 PROTECTION AND CURING

A. Protect fresh concrete from direct rays of sunlight, drying winds, and wash by rain.

B. Use curing compound in accordance with manufacturer's directions on concrete.

C. Cure formed surfaces with curing compound applied in accordance with manufacturer's directions as soon as forms are removed and finishing is completed.

D. Remove and replace concrete damaged by freezing.

3.12 NONSHRINK GROUT

A. General: Mix, place, and cure nonshrink grout in accordance with grout manufacturer's written instructions.

B. Form Tie: Provide nonshrink grout fill space with dry pack dense grout hammered in with steel tool and hammer.

C. Grouting Machinery Foundations:

1. Block out original concrete or finish off at distance shown below bottom of machinery base with grout. Prepare concrete surface by sandblasting, chipping, or by mechanical means to remove any soft material.
2. Set machinery in position and wedge to elevation with steel wedges, or use cast-in leveling bolts.
3. Form with watertight forms at least 2 inches higher than bottom of plate.
4. Fill space between bottom of machinery base and original concrete in accordance with manufacturer's written instructions.

3.13 BACKFILL AGAINST WALLS

A. Do not backfill against walls until concrete has obtained specified 28-day compressive strength.

B. Place backfill simultaneously on both sides of wall where required, to prevent differential pressures.

3.14 FIELD QUALITY CONTROL

A. General:

1. Provide adequate facilities for safe storage and proper curing of concrete test cylinders onsite for first 24 hours, and for additional time as may be required before transporting to test lab.
2. Provide concrete for testing of slump, air content, and for making cylinders from the point of discharge into forms. When concrete is pumped, take samples from discharge end of pump hose.
3. Evaluation will be in accordance with ACI 301 and Specifications.
4. Make, cure, and test specimens in accordance with ASTM C31/C31M and ASTM C39/C39M.
5. Frequency of testing may be changed at discretion of CONSTRUCTION MANAGER.
6. Reject concrete represented by cylinders failing to meet strength and air content specified.

B. Cold Weather Placement Tests:

1. During cold weather concreting, cast cylinders for field curing as follows. Use method that will produce greater number of specimens:
   a. Six extra test cylinders from last 100 cubic yards of concrete.
   b. Minimum three specimens for each 2 hours of placing time or for each 100 cubic yards.
2. These specimens are in addition to those cast for lab testing.

3. Protect test cylinders from weather until they can be placed under same protection provided for concrete of structure that they represent.
4. Keep field test cylinders in same protective environment as parts of structure they represent to determine if specified strength has been obtained.
5. Test cylinders in accordance with applicable sections of ASTM C31/C31M and ASTM C39/C39M.
6. Use test results to determine specified strength gain prior to falsework removal.

END OF SECTION

SECTION 05 50 00
METAL FABRICATIONS

PART 1 GENERAL

1.01 DEFINITIONS

A. Exterior Area: Location not protected from the weather by a building or other enclosed structure.

B. Interior Wet Area: Location inside building or structure where floor is sloped to floor drains or gutters and is subject to liquid spills or washdown, or where wall, floor, or roof slab is common to a water-holding or earth-retaining structure.

1.02 SUBMITTALS

A. Action Submittals:

1. Shop Drawings:
   a. Metal fabrications, including welding and fastener information.
   b. Manufacturer's product data for concrete and masonry drilled anchors and doweling adhesive.
   c. Specific instructions for concrete anchor and dowel installation, including drilled hole size, preparation, placement, procedures, and instructions for safe handling of anchoring systems.

B. Informational Submittals:

1. ICC Evaluation Services Report for concrete and masonry drilled anchors and doweling adhesive.
2. Ladders: Certification of load and fatigue tests.

1.03 DELIVERY, STORAGE, AND HANDLING

A. Insofar as practical, factory assemble items specified herein. Package and tag assemblies that due to necessity have to be shipped unassembled in manner that will protect materials from damage and will facilitate identification and field assembly.

B. Protect painted coatings and hot-dip galvanized finishes from damage due to metal banding and rough handling. Use padded slings and straps.

C. Store fabricated items in dry area, not in direct contact with ground.

D. Packaging and Storage for Adhesive Anchors and Dowels:

1. Disposable, self-contained cartridge system.
2. Store adhesive cartridges on pallets or shelving in covered storage area, in accordance with manufacturer's written instructions.
3. Cartridge Markings: Include manufacturer's name, product name, material type, batch or serial number, and adhesive expiration date.
4. Dispose of cartridges if shelf life has expired.

PART 2 PRODUCTS

2.01 GENERAL

A. Unless otherwise indicated, meet the following requirements:

Item	ASTM Reference
Steel W Shapes	A992
All Other Steel Shapes and Plates	A36/A36M
Steel Pipe	A501 or A53/A53M, Type E or S, Grade B
Structural Steel Tubing	A500, Grade B
Stainless Steel:	
Bars and Angles	A276, AISI Type 316
Shapes	A276, AISI Type 304
Steel Plate, Sheet, and Strip	A240/A240M, AISI Type 316
Bolts, Threaded Rods, Anchor Bolts, and Anchor Studs	F593, AISI Type 316, Condition CW
Nuts	F594, AISI Type 316, Condition CW
Steel Bolts and Nuts:	
Carbon Steel	A307 bolts, with A563 nuts
High-Strength	A325, Type 1 bolts, with A563 nuts
Anchor Bolts and Rods	F1554, Grade 55, with weldability supplement S1.
Eyebolts	A489
Threaded Rods	A36/A36M
Flat Washers (Unhardened)	F844

Item	ASTM Reference
Flat and Beveled Washers (Hardened)	F436
Welded Anchor Studs	A108, Grades C-1010 thru C-1020
Aluminum Plates and Structural Shapes	B209 and B308/B308M, Alloy 6061-T6
Aluminum Bolts and Nuts	F468, Alloy 2024-T4
Cast Iron	A48, Class 35

B. Bolts, Washers, and Nuts: Use stainless steel, hot-dip galvanized steel, zinc-plated steel, and aluminum material types as indicated in Fastener Schedule at end of this section.

2.02 ANCHOR BOLTS AND ANCHOR BOLT SLEEVES

A. Cast-In-Place Anchor Bolts:

1. Headed type, unless otherwise shown on Drawings.
2. Material type and protective coating as shown in Fastener Schedule at end of this section.

B. Anchor Bolt Sleeves:

1. Plastic:
   a. Single unit construction with corrugated sleeve.
   b. Top of sleeve must be self-threading to provide adjustment of threaded anchor bolt projection.
   c. Material: High density polyethylene.
   d. Manufacturer: Sinco Products, Inc., Middletown, CT. (800-243-6753).
2. Fabricated Steel: ASTM A36/A36M.

2.03 CONCRETE AND MASONRY DRILLED ANCHORS AND DOWEL ADHESIVE

A. General:

1. Drilled Anchors: AISI Type 316 stainless, hot-dip galvanized, or zinc-plated steel, as shown in Fastener Schedule at end of this section.
2. Adhesive systems used in concrete shall be approved by current ICC Evaluation Services Report indicating acceptance per the 2006 IBC for anchors in structural applications in cracked concrete. Anchors to be suitable for long-term loads, as well as for wind and seismic loads.
3. Adhesive systems used with rebar dowels in concrete shall be ICC approved for doweling of steel reinforcing bars.

B. Threaded Rod for Adhesive Anchors:

1. ASTM F593 stainless steel threaded rod, diameter as shown on Drawings.
2. Length as required, to provide minimum depth of embedment.
3. Clean and free of grease, oil, or other deleterious material.
4. For hollow-unit masonry, provide galvanized or stainless steel wire cloth screen tube to fit threaded rod.

C. Adhesive:

1. Disposable, self-contained cartridge system capable of dispensing both components in the proper mixing ratio and that fit into manually or pneumatically operated caulking gun.
2. Meet requirements of ASTM C881/C881M.
3. Two-component, insensitive to moisture, designed to be installed in adverse freeze/thaw environments.
4. Cure Temperature, Pot Life, and Workability: Compatible for intended use and anticipated environmental conditions.
5. Mixed Adhesive: Nonsag light paste consistency with ability to remain in a 1-inch diameter overhead drilled hole without runout.

2.04 ACCESS HATCHES (SIDEWALK DOORS)

A. Load Capacity: 300 psf with maximum deflection of 1/150th of span. Provide H-20 highway loading capacity where indicated on Drawings.

B. Component Fabrication:

1. Access Door Leaf(s): 1/4-inch aluminum diamond pattern plate. Provide stainless steel safety chain and attachments for end of double-leaf door assembly when open.
2. Channel Frame: 1/4-inch thick extruded aluminum trough frame with continuous anchor flange around perimeter. Weld 1-1/2-inch diameter drain coupling to frame trough at front right corner, unless indicated otherwise on Drawings. Provide drain pipe to connect to drain coupling.

C. Door Hardware:

1. Hinges: Heavy-duty brass or stainless steel with stainless steel pins through-bolted to cover plate with tamper-proof stainless steel bolts flush with top of cover and to outside leg of channel frame with stainless steel bolts and locknuts.
2. Lifting Mechanism: Stainless steel compression lift springs enclosed in telescoping vertical housing or stainless steel torsion lift springs.

3. Hold-Open Arm:
   a. Locks automatically in open position.
   b. Disengages with slight pull on vinyl grip with one hand.
   c. Door can be easily closed with one hand by pulling forward and down on vinyl grip.
4. Snap Lock:
   a. Stainless steel snap lock mounted on bottom of door leaf with removable topside key wrench and inside fixed lever handle.
   b. Threaded plug for flush outside surface with key wrench removed.
5. Padlock Staple: Recessed padlock pocket with padlock staple and hinge.
6. Mount 2-1/4-inch stainless steel loop to bottom of door leaf, centered. Hook FPS ladder extension kit to loop with stainless steel carabineer.

D. Aluminum to be mill finished with protective coating applied to surfaces to be in contact with concrete, as specified in Section 09 90 04, Painting.

E. Manufacturers and Products:

1. Bilco Co., New Haven, CT; J Series.
2. Nystrom Products Co., Minneapolis, MN; FG Series.
3. U.S.F. Fabrication, Hialeah, FL; T Series.
4. Flyght Corp., Trumbull, CT; FDRN Series.
5. Thompson Fabricating Co., Birmingham, AL; TE Series.
6. Halliday Products, Orlando, FL; WS Series.

2.05 LADDERS

A. Material: Aluminum.

B. Fabricate ladders with rails, rungs, landings, and cages to meet applicable requirements of OSHA, CFR Part 1910.27, and ANSI A14.3.

1. Concentrated load of 250 pounds plus 30 percent impact on rungs.
2. Maximum rung deflection of l/360.
3. Concentrated load of 250 pounds plus 30 percent impact between consecutive attachments.

C. Flat Bar Ladders:

1. Punch rails, pass rungs through rails, and weld on outside.
2. Weld brackets to the ladder for fastening ladder to wall.

D. Ladder Safety Post:

1. Telescoping tubular, spring balanced and automatically locking in raised position, with release lever for unlocking.
2. Post: Aluminum.
3. Spring Mechanism: Stainless steel.

4. Furnish dissimilar metal protective coatings at connections.
5. Manufacturer and Product: Bilco Co., New Haven, CT; “Ladder Up” to fit ladder rungs.
6. Provide with the ladders.

2.06 FALL PREVENTION SYSTEM

A. General:

1. Conforms to ANSI A14.3 and OSHA CFR Part 1910.27.
2. Belt and harness to withstand minimum drop test of 250 pounds in 6-foot free fall.
3. Fall Prevention System Material: Aluminum 6061-T6.

B. Components and Accessories (Provided With Every Fall Prevention System):

1. Main Components: Sleeve or Trolley, Safety Harness, and Carrier or Climbing Rail.
2. Ladder rung clamps with aluminum mounting brackets and hardware.
3. Removable extension kit with tiedown rod or trolley gate, mandrel, and carrier rail for ladders under manholes and hatches.

C. Manufacturer and Product: DBI Sala; SRL Ladder Mounting Anchorage System.

2.07 ACCESSORIES

A. Antiseizing Lubricant for Stainless Steel Threaded Connections:

1. Suitable for potable water supply.
2. Resists washout.
3. Manufacturers and Products:
   a. Bostik, Middleton, MA; Neverseez.
   b. Saf-T-Eze Div., STL Corp., Lombard, IL; Anti-Seize.

2.08 FABRICATION

A. General:

1. Finish exposed surfaces smooth, sharp, and to well-defined lines.
2. Furnish necessary rabbets, lugs, and brackets so work can be assembled in neat, substantial manner.
3. Conceal fastenings where practical; where exposed, flush countersink.
4. Drill metalwork and countersink holes as required for attaching hardware or other materials.
5. Grind cut edges smooth and straight. Round sharp edges to small uniform radius. Grind burrs, jagged edges, and surface defects smooth.
6. Fit and assemble in largest practical sections for delivery to Site.

B. Materials:

1. Use steel shapes, unless otherwise noted.
2. Steel to be hot-dip galvanized: Limit silicon content to less than 0.04 percent or to between 0.15 and 0.25 percent.
3. Fabricate aluminum in accordance with AA Specifications for Aluminum Structures – Allowable Stress Design.

C. Welding:

1. Weld connections and grind exposed welds smooth. When required to be watertight, make welds continuous.
2. Welded fabrications to be free from twisting or distortion caused by improper welding techniques.
3. Steel: Meet fabrication requirements of AWS D1.1, Section 5.
4. Aluminum: Meet requirements of AWS D1.2.
5. Stainless Steel: Meet requirements of AWS D1.6.
6. Complete welding before applying finish.

D. Painting:

1. Shop prime with rust-inhibitive primer as specified in Section 09 90 04, Painting, unless otherwise indicated.
2. Coat surfaces of galvanized steel and aluminum fabricated items to be in direct contact with concrete, grout, masonry, or dissimilar metals, as specified in Section 09 90 04, Painting, unless indicated otherwise.
3. Do not apply protective coating to galvanized steel anchor bolts or galvanized steel welded anchor studs, unless indicated otherwise.

E. Galvanizing:

1. Fabricate steel to be galvanized in accordance with ASTM A143, ASTM A384, and ASTM A385. Avoid fabrication techniques that could cause distortion or embrittlement of the steel.
2. Provide venting and drain holes for tubular members and fabricated assemblies in accordance with ASTM A385.
3. Remove welding slag, splatter, burrs, grease, oil, paint, lacquer, and other deleterious material prior to delivery for galvanizing.
4. Remove by blast cleaning or other methods surface contaminants and coatings not removable by normal chemical cleaning process in the galvanizing operation.
5. Hot-dip galvanize steel members, fabrications, and assemblies after fabrication in accordance with ASTM A123/A123M.
6. Hot-dip galvanize bolts, nuts, washers, and hardware components in accordance with ASTM A153/A153M. Oversize holes to allow for zinc alloy growth. Shop assemble bolts and nuts.
7. Galvanized steel sheets in accordance with ASTM A653.

8. Galvanize components of bolted assemblies separately before assembly. Galvanizing of tapped holes is not required.

F. Fitting: Where movement of fabrications is required or shown, cut, fit, and align items for smooth operation. Make corners square and opposite sides parallel.

G. Accessories: Furnish as required for a complete installation. Fasten by welding or with stainless steel bolts or screws.

2.09 SOURCE QUALITY CONTROL

A. Visually inspect fabrication welds and correct any deficiencies in accordance with the appropriate AWS welding code for material type being welded.

PART 3 EXECUTION

3.01 INSTALLATION OF METAL FABRICATIONS

A. General:

1. Install metal fabrications plumb or level, accurately fitted, free from distortion or defects.
2. Install rigid, substantial, and neat in appearance.
3. Install manufactured products in accordance with manufacturer's recommendations.
4. Obtain CONSTRUCTION MANAGER approval prior to field cutting steel members or making adjustments not scheduled.

B. Aluminum:

1. Do not remove mill markings from concealed surfaces.
2. Remove inked or painted identification marks on exposed surfaces not otherwise coated after installed material has been inspected and approved.
3. Fabrication, mechanical connections, and welded construction in accordance with the AA Aluminum Design Manual.

3.02 CAST-IN-PLACE ANCHOR BOLTS

A. Accurately locate and hold anchor bolts in place with templates at the time concrete is placed.

B. Use anchor bolt sleeves for location adjustment and provide two nuts and one washer per bolt of same material as bolt.

C. Minimum Bolt Size: 1/2-inch diameter by 12 inches long, unless otherwise shown.

3.03 CONCRETE AND MASONRY DRILLED ANCHORS AND ADHESIVE DOWELS

A. Begin installation only after concrete or masonry to receive anchors or dowels has attained design strength.

B. Install in accordance with manufacturer's instructions.

C. Provide minimum embedment, edge distance, and spacing for drilled anchors as follows, unless indicated otherwise by anchor manufacturer's instructions or shown otherwise on Drawings:

Anchor Type	Min. Embedment (bolt diameters)	Min. Edge Distance (bolt diameters)	Min. Spacing (bolt diameters)
Wedge	9	6	12
Expansion and Sleeve	4	6	12
Adhesive	9	9	13.5

D. Adhesive Anchors and Dowels:

1. Use only drill type and bit type and diameter recommended by anchor system manufacturer.
2. Where edge distances are less than 2 inches, use lighter impact equipment to prevent microcracking and concrete spalling during drilling process.
3. Do not install adhesive anchors when temperature of concrete is below 40 degrees F (25 degrees F for Simpson Strong-Tie Acrylic-Tie Adhesive) or above 100 degrees F.
4. Remove any standing water from hole with oil-free compressed air. Inside surface of hole to be dry where required by manufacturer's instructions.
5. Clean hole of debris and dust with brush and compressed air.
6. Dispense components through specially designed static mixing nozzle that thoroughly mixes components and places mixed adhesive at base of predrilled hole.
7. Do not disturb anchor during recommended curing time.
8. Do not exceed maximum torque at drilled anchors as specified in manufacturer's instructions.

E. Obstructions in Drill Path: When embedded steel or rebar is encountered in the drill path, slant drill to clear obstruction. If drill must be slanted more than 10 degrees to clear obstruction, notify CONSTRUCTION MANAGER for direction on how to proceed.

3.04 ACCESS HATCHES (SIDEWALK DOORS)

A. Install access covers, including sidewalk doors, floor hatches, and hinged manhole covers in accordance with manufacturer's instructions.

B. Route drain pipe in the field to exterior face of concrete.

C. Accurately position prior to placing concrete, such that covers are flush with floor surface.

D. Protect from damage resulting from concrete placement. Thoroughly clean exposed surfaces of concrete spillage to obtain a clean, uniform appearance.

3.05 FALL PREVENTION SYSTEM

A. Provide for each ladder where unbroken height between levels exceeds 15 feet.

B. Install in accordance with manufacturer's instructions.

C. Furnish additional accessories required to complete the system for each ladder.

D. Furnish one harness for each ladder.

E. Furnish pivot section at platforms, landings, and roofs.

F. When installed to required height, fall prevention system is required to be rigid and an integral part of the structure.

3.06 ELECTROLYTIC PROTECTION

A. Aluminum and Galvanized Steel:

1. Coat surfaces of galvanized steel and aluminum fabricated items to be in direct contact with concrete, grout, masonry, or dissimilar metals, as specified in Section 09 90 04, Painting, unless indicated otherwise.
2. Do not apply protective coating to galvanized steel anchor bolts or galvanized steel welded anchor studs, unless indicated otherwise.
3. Allow coating to dry before installation of the material.
4. Protect coated surfaces during installation.
5. Should coating become marred, prepare and touch up in accordance with paint manufacturer's written instructions.

3.07 FASTENER SCHEDULE

A. Provide fasteners as follows:

Service Use and Location	Product	Remarks
1. Anchor Bolts Cast Into Concrete for Structural Steel Column Base Plates		
Exterior and Interior Wet Areas	Stainless steel headed anchor bolts.	
2. Anchor Bolts Cast Into Concrete for Equipment Bases		
All Areas	Stainless steel headed anchor bolts, unless otherwise specified with equipment	
3. Anchor Bolts Cast Into Concrete for Metal Fabrications and Structural Components		
Exterior and Interior Wet Areas	Stainless steel headed anchor bolts	
4. Drilled Anchors for Metal Components to Cast-in-Place Concrete (e.g., Ladders, Handrail Posts, Electrical Panels, and Equipment)		
Exterior and Interior Wet Areas	Adhesive stainless steel anchors	
5. Connections for Structural Steel Framing		
Exterior and Interior Wet Areas	High-strength steel bolted connections	Use hot-dipped galvanized high-strength bolted connections for galvanized steel framing members
6. Connections of Aluminum Components		
Exterior and Interior Wet Areas	Stainless steel bolted connections, unless otherwise specified with equipment	
7. Other		
Exterior and Interior Wet Areas	Stainless steel fasteners	

B. Antiseizing Lubricant: Use on stainless steel threads.

C. Do not use adhesive anchors to support fire-resistive construction or where ambient temperature will exceed 120 degrees F.

END OF SECTION

SECTION 05 52 00
METAL RAILINGS

PART 1 GENERAL

1.01 REFERENCES

A. The following is a list of standards which may be referenced in this section:

1. Aluminum Association, Incorporated (AA): DAF45, Designation System for Aluminum Finishes.
2. American Iron and Steel Institute (AISI).
3. ASTM International (ASTM):
   a. E985, Standard Specification for Permanent Metal Railing Systems and Rails for Buildings.
4. International Code Council (ICC): International Building Code (IBC).
5. Occupational Safety and Health Act (OSHA): 29 CFR 1910, Code of Federal Regulations.

1.02 DEFINITIONS

A. Handrails: Synonymous with terms; i.e., guardrail system, railing system, ramp-rail system, and stair-rail system. Handrails are comprised of a framework of vertical, horizontal, or inclined members, grillwork or panels, accessories, or combination thereof.

B. ICC Evaluation Services Report for concrete anchor manufacturers.

C. Special Inspection: As governed by the ICC IBC.

1.03 SUBMITTALS

A. Action Submittals:

1. Shop Drawings:
   a. Indicate handrail profiles, sizes, connections, anchorage, size and type of fasteners, and accessories. Project-specific scale plans and elevations of handrails.
   b. Manufacturer's literature and catalog data of handrail and components.
   c. Design Data: Calculations or test data using design performance loads and include the following:
      1) Bending stress in, and deflection of, posts in accordance with ASTM E985.
      2) Stress in post base connection.

3) Calculation of anchorage forces and comparison of these forces to ICC IBC recommendations regarding safe allowable design loads of anchorages.
4) For concrete anchor spacings less than 12 anchor diameters and edge distances less than six anchor diameters, make reduction in allowable pullout and shear values. Provide independent laboratory inspection service for ICC Evaluation Services Report values with Special Inspection.

B. Informational Submittals:

1. Manufacturer's assembly and installation instructions.
2. Test Reports: Test data may supplement load calculations providing data covers the complete handrail system, including anchorage:
   a. Test data for handrail and components showing load and deflection due to load, in enough detail to prove handrail is strong enough and satisfies national, state, local standards, regulations, code requirements, and OSHA 29 CFR 1910, using design loads specified. Include test data for the following:
      1) Railing and post connections.
      2) Post and base connections.
   b. Deflection Criteria: In accordance with ASTM E985 and design loads specified.
   c. Aluminum Rail Piping: Test data showing yield strength of pipe as-delivered equals or exceeds values specified in this section.
   d. Concrete Anchors: Calculations and test data for review prior to use, on anchors other than those specified.
3. Manufacturer's written recommendations describing procedures for maintaining handrails including cleaning materials, application methods, and precautions to be taken in the use of cleaning materials.

1.04 QUALITY ASSURANCE

A. Qualifications: Calculations required for design data stamped by a registered civil or structural engineer licensed in the state where the Project will be constructed.

1.05 DELIVERY, STORAGE, AND HANDLING

A. Handrails adequately packaged and wrapped to prevent scratching and denting during shipment, storage, and installation. Maintain protective wrapping until railing is completely installed.

B. Aluminum Handrails:

1. Shop assemble into practical modules of lengths not exceeding 24 feet for shipment.
2. Deliver clear anodized handrail pipe and posts with protective plastic wrap.

1.06 ENVIRONMENTAL REQUIREMENTS

A. Thermal Movements: Allow for thermal movement resulting from the following maximum range in ambient temperature in design, fabrication, and installation of handrails to prevent buckling, opening up of joints, over stressing of components, connections and other detrimental effects. Base design calculation on actual surface temperatures of materials due to both solar heat gain and night time sky heat loss. Temperature change is difference between high or low temperature and installation temperature.

1. Temperature Change Range: 70 degrees F, ambient; 100 degrees F, material surfaces.

PART 2 PRODUCTS

2.01 DESIGN PERFORMANCE

A. Structural Performance of Handrails: Design, test, fabricate, and install handrails to withstand the following structural loads without exceeding allowable design working stress or allowable deflection. Apply each load to produce maximum stress and deflection in each of the respective components comprising handrails.

1. Top Rail of Handrails: Capable of withstanding the following load cases applied:
   a. Concentrated load of 200 pounds applied at any point and in any direction in accordance with ICC IBC.
   b. Uniform load of 50 pounds per linear foot applied in any direction in accordance with ICC IBC.
   c. Concentrated load need not be assumed to act concurrently with uniform loads in accordance with ICC IBC.
2. In-Fill Area of Railing Systems:
   a. Capable of withstanding a horizontally applied normal load of 50 pounds applied to 1 square foot at any point in the system including panels, intermediate rails, balusters, and openings and space between railings.
   b. Horizontal concentrated load need not be assumed to act concurrently with loads on top rails of handrails.
3. Mid-rails with corner returns to withstand a 300-pound concentrated vertical load applied at any point or direction without damage and loosening of pipe, fittings, or attachment hardware.

4. Concrete Anchors: In accordance with ICC IBC for size, length, embedment, spacing, and edge distance to match required loads shown in calculations.

2.02 ALUMINUM HANDRAILS

A. General:

1. Furnish pre-engineered and prefabricated two picket handrails.
2. Pop rivets and glued railing construction not permitted.

B. Manufacturers:

1. Thompson Fabricating Co., Birmingham, AL.
2. Moultrie Manufacturing, Moultrie, GA; Wesrail II.

C. Rails, Posts, and Formed Elbows: Extruded Alloy 6105-T5 or 6061-T6, minimum tensile strength of 38,000 psi and minimum yield strength of 35,000 psi.

1. Miscellaneous Aluminum Parts: 6063-T6 or 6061-T6 extruded aluminum of adequate strength for the loads.
2. Post and Railing: Nominal 1-1/2-inch diameter.
   a. Rails: 1.900-inch outside diameter by 0.145-inch wall thickness, Schedule 40.
   b. Posts: 1.900-inch outside diameter by 0.200-inch wall thickness, Schedule 80.
   c. Solid dowel interconnectors of 6105-T5 or 6061-T6 aluminum.

D. Fittings:

1. Handrail and Post Fittings: Extruded, machined bar stock, permanent mold castings, or die castings of sufficient strength to meet load requirements. Match color of fittings to pipe in handrails. Sand cast parts not permitted.
2. Concrete Side Mounted Handrail Bracket: Extruded aluminum, Alloy 6063-T6 with four holes for bolts or concrete anchors.
   a. Manufacturers and Products:
      1) Thompson Fabricating Co.; Part No. TSM-1.5.
      2) Moultrie Manufacturing Co.; Part No. WIISMB.
3. Concrete Anchors for Securing Bases and Brackets to Concrete: Type 304 or Type 316 stainless steel 1/2-inch concrete anchors.
4. Miscellaneous Rail to Post Fittings:
   a. Aluminum Tee Fittings:
      1) Manufacturers and Products:
         a) Thompson Fabricating Co.; Part Nos. TF-1 and TX-1.
         b) Moultrie Manufacturing Co.; Part Nos. WIIT40, WIIT40/05, WIIT80, and WIIT80/05.

b. Aluminum Ell Fittings:
   1) Manufacturers and Products:
      a) Thompson Fabricating Co.; Part Nos. TE-1, TE-2, and TE-3.
      b) Moultrie Manufacturing Co.; Part No. 51900.
c. Aluminum Splice Lock:
   1) Manufacturers and Products:
      a) Thompson Fabricating Co.; Part No. SL-1.
      b) Moultrie Manufacturing Co.; Part No. WIIS40.
d. Aluminum Expansion Joint Splice:
   1) Manufacturers and Products:
      a) Thompson Fabricating Co.; Part No. ES-1.
      b) Moultrie Manufacturing Co.; Part No. WII40, omit set screws on one side.
e. Formed Aluminum Wall Flange:
   1) Manufacturers and Products:
      a) Thompson Fabricating Co.; Part No. CF-2.
      b) Moultrie Manufacturing Co.; Part No. 41250.

E. Concrete Embedded Metal Anchorages: In accordance with Section 05 50 00, Metal Fabrications.

F. Finishes:

1. Handrail Pipe and Post: In accordance with AA DAF45, designation AA-M32-C22-A41.
2. Cast Fittings and Toeboards: In accordance with AA DAF45, designation AA-M10-C22-A41.

2.03 ANCHOR BOLTS, FASTENERS, AND CONCRETE ANCHORS

A. Locknuts, Washers, and Screws:

1. Elastic Locknuts, Steel Flat Washers, RHMS Round Head Machine Screws: Type A 304 or Type A 316 stainless steel.
2. Flat Washers: Molded nylon.
3. Manufacturer: McMaster-Carr Supply Co., Los Angeles, CA.

B. Concrete Anchors:

1. Stainless steel Type 304 or Type 316.
2. Use ICC IBC approved values for size, length, embedment, spacing, and edge distance to match required loads shown in calculations.

C. Epoxy Anchors:

1. Heavy-duty 1/2-inch diameter, for exterior use only in accordance with Section 05 50 00, Metal Fabrications, as an alternative to mechanical concrete anchors.
2. Design and provide number required.
3. Do not use where fire or elevated temperatures above 110 degrees F exist.

2.04 FABRICATION OF ALUMINUM HANDRAILS

A. Shop Assembly:

1. Post Spacing: Maximum 6-foot horizontal spacing.
2. Railing Posts Bolted to Metal or Concrete:
   a. In lieu of field cutting, provide approved fitting with sufficient post overlap, containing provisions for vertical adjustment.
   b. Field fit-up is required.
3. Free of burrs, nicks, and sharp edges when fabrication is complete.
4. Welding is not permitted.

B. Shop/Factory Finishing:

1. Use same alloy for uniform appearance throughout fabrication for railings.
2. Handrail and Post Fittings: Match fittings with color of pipe in handrail.
3. Sand cast parts not permitted.

C. Tolerances:

1. Shop assemble rails, posts, and formed elbows with a close tolerance for tight fit.
2. Fit dowels tightly inside posts.

PART 3 EXECUTION

3.01 GENERAL

A. Provide railing posts longer than needed and field cut to exact dimensions required in order to satisfy vertical variations on the actual structure. Install railing with a base that provides plus or minus 1/4-inch vertical adjustment inside base fitting. If adjustment is required in the field and exceeds plus or minus 1/4-inch, reduce post length not to exceed beyond bottom of lowest set-screw or bolt in base fitting.

B. Field fabrication of aluminum railing systems not permitted.

C. Modification to structure not permitted where handrail is attached.

D. Mount handrails only on completed walls. Do not support handrails temporarily by means not satisfying structural performance requirements.

3.02 HANDRAIL INSTALLATION

A. Assembly and Installation: Perform in accordance with manufacturer's written recommendations for installation.

B. Protection from Entrapped Water:

1. Make provisions in exterior and interior installations subject to high humidity to drain water from railing system.
2. Posts mounted in concrete, bends, and elbows occurring at low points drill weep holes of 1/4-inch diameter at lowest possible elevations, one hole per post or rail. Drill hole in the plane of the rail.

C. Expansion Joints:

1. Maximum intervals of 54 feet on center and at structural joints.
2. Slip joint with internal sleeve extending 2 inches beyond each side of joint. Provide 1/2-inch slip joint gap to allow for expansion.
3. Fasten to one side using 3/8-inch diameter set-screw. Place set-screw at bottom of pipe.
4. Locate joints within 12 inches of posts. Locate expansion joints in rails that span expansion joints in structural walls and floors supporting the posts.

D. Posts and Rails:

1. Set posts plumb and aligned to within 1/8 inch in 12 feet.
2. Set rails horizontal or parallel to slope of steps to within 1/8 inch in 12 feet.
3. Install posts and rails in same plane. Remove projections or irregularities and provide a smooth surface for sliding hands continuously along top rail. Use offset rail for use on stairs and platforms if post is attached to web of stringers or structural platform supports.
4. Support 1-1/2-inch rails directly above stairway stringers with offset fittings.

3.03 FIELD FINISHING

A. Corrosion Protection: Prevent galvanic action and other forms of corrosion caused from direct contact with concrete and dissimilar metals by coating metal surfaces with one coat of bituminous paint, 10 MDFT. Prepare surfaces and prime as required by coating manufacturer.

3.04 TESTS AND INSPECTIONS

A. Perform Special Inspection for anchors where ICC Evaluation Services Reports require them for anchor strength value used.

B. UTILITIES to furnish Special Inspection.

3.05 CLEANING

A. Wash railing system thoroughly using clean water and soap. Rinse with clean water.

B. Do not use acid solution, steel wool, or other harsh abrasive.

C. If stain remains after washing, restore in accordance with manufacturer's recommendations or replace stained handrails.

END OF SECTION

SECTION 05 53 00
METAL GRATING

PART 1 GENERAL

1.01 SUBMITTALS

A. Action Submittals:

1. Shop Drawings:
   a. Grating: Show dimensions, weight, and size, and location of connections to adjacent grating, supports, and other Work.
   b. Catalog information and catalog cuts.

1.02 PREPARATION FOR SHIPMENT

A. Insofar as is practical, factory assemble items provided.

B. Package and clearly tag parts and assemblies that are of necessity shipped unassembled and protect the materials from damage, and facilitate identification and final assembly in the field.

PART 2 PRODUCTS

2.01 FOOT TRAFFIC GRATING

A. Design:

1. Uniform Service Load: 100 psf minimum, unless otherwise shown.
2. Maximum Deflection: 1/4 inch, unless otherwise shown.
3. Space bearing bars at 1-3/16 inch center-to-center.
4. Banding: 3/16 inch minimum.

B. Material:

1. Aluminum Bar Type Grating:
   a. Swage locked aluminum I-bar grating, as manufactured by:
      1) IKG/Borden, Clark, NJ; Type IF.
      2) Seidelhuber Metal Products, Inc., San Carlos, CA; Type 19SI2.
      3) Ohio Gratings, Inc., Canton, OH; Type 19 SGI 2.
      4) Klemp Corp., Chicago, IL; Type KIP.

2.02 ACCESSORIES

A. Anchor Bolts and Nuts:

1. Stainless Steel: ASTM A193 and ASTM A194, Type 316.

B. Removable Fastener Clips and Bolts:

1. Removable from above grating walkway surface.
2. Hat Bracket: Type 304 stainless steel.
3. Bolt: Type 316 stainless steel.
4. Manufacturer and Product: Struct-Fast, Wellesley Hills, MA; Gratefast.

2.03 FABRICATION

A. General:

1. Exposed Surfaces: Smooth finish and sharp, well-defined lines.
2. Furnish necessary rabbets, lugs, and brackets so work can be assembled in a neat, substantial manner.
3. Conceal fastenings where practical.
4. Drill metalwork and countersink holes as required for attaching hardware or other materials.
5. Weld Connections: Not permitted on grating except at banding bars.

B. Design:

1. Field measure areas to receive grating, verify dimensions of new fabricated supports, and fabricate to dimension required for specified clearances.
2. Section Length: Sufficient to prevent its falling down through clear opening when oriented in the span direction when one end is touching either the concrete or the vertical leg of grating support.
3. Minimum Bearing: ANSI/NAAMM MBG 531.
4. Metal Crossbar Spacing: 4 inches maximum, unless otherwise shown or specified.
5. Crossbars: Flush with top of main bar and extend downward a minimum of 50 percent of the main bar depth.
   a. Swaged Crossbars:
      1) Within 1/4 inch of top of grating with 1/2 inch minimum vertical dimension after swaging, and minimum before swaging dimension of 5/16 inch square.
      2) Crossbar Dimension After Swaging: Minimum 1/8 inch wider than the opening at minimum of two corners at each side of each square opening in main bar.
      3) Crossbars may be a special extruded shape so that after swaging the top will be flat, 3/16 inch wide and will be flush with the top surface of the bearing bars for a minimum of 5/8 inch at center between bearing bars.
      4) Flush crossbar meeting the above except that after swaging must overlap one corner by a minimum of 1/8 inch. Test a Sample of one bearing bar and one crossbar by holding the bearing bar and pulling on the crossbar. The crossbar to

bearing bar is to sustain a minimum of 300 pounds without pullout of the bearing bar.

5) Tightly fit main bars and crossbars allowing no differential movement.

6. Do not use weld type crossbars.
7. Banding: Same material as grating; ANSI/NAAMM MBG 531 and ANSI/NAAMM MBG 532.
8. Furnish stainless steel Type 316 threaded anchor studs, as fasteners for grating attachment to metal supports either not embedded or partially embedded in concrete, as manufactured by Nelson Studs Welding Co., Lorain, OH.

C. Supports:

1. Seat angles and beams where shown:
   a. Same material as rectangular bar grating.
   b. Extruded aluminum frame with slot for recessed grating clips, as manufactured by Thompson Fabricating Co., for aluminum I-Bar type grating.
2. Coordinate dimensions and fabrication with grating to be supported.
3. Coordinate dimensions with increased depth due to serrations.

D. Slip-Resistant Surface:

1. Rectangular Steel and Aluminum Bar Grating: As manufactured by:
   a. IKG/Borden, Clark, NJ; EZ Weldslip-Resistant Coating.
   b. Seidelhuber Metal Products, Inc., Hayward, CA; Safety Grit Non-Slip System.
   c. Ohio Gratings, Inc., Canton, OH with “Slip-Not” Safety Surface manufactured by W.S. Molnar Co., Detroit, MI.
2. I-Bar grating aluminum to incorporate a striated antiskid walking surface produced during the extrusion process, as manufactured by:
   a. IKG/Borden, Clark, NJ.
   b. Seidelhuber Metal Products, Inc., Hayward, CA.
   c. Klemp Corp., Chicago, IL.

E. Aluminum:

1. ASTM B221 extruded shapes.
2. Fabricate as shown and in accordance with manufacturer’s recommendations.
3. Grind smooth sheared edges exposed in the finished work.
4. Swage crossbars, if used, with equipment strong enough to deform crossbars.
5. Eliminate any loose crossbar intersections on swaged grating.

F. Foot Traffic Grating: Single grating sections, individual planks, or plank assemblies to be not less than 1 foot 6 inches or greater than 3 feet 0 inch in width or weigh more than 150 pounds.

PART 3 EXECUTION

3.01 PREPARATION

A. Electrolytic Protection:

1. Aluminum in contact with dissimilar metals, other than stainless steel, and embedded or in contact with masonry, grout, and concrete, protect surfaces as specified in Section 09 90 04, Painting.
2. Allow paint to dry before installation of the material.

3.02 INSTALLATION

A. Install supports such that grating sections have a solid bearing on both ends, and that rock and wobble grating movement does not occur under designed traffic loading.

B. Install plumb or level as applicable.

C. Install welded frames with anchors to straight plane without offsets.

D. Anchor grating securely to supports using minimum of four fastener clips and bolts per grating section.

E. Use stainless steel anchors and accessories with aluminum gratings.

F. Completed installation to be rigid and neat in appearance.

G. Commercially Manufactured Products:

1. Install in accordance with manufacturer's recommendations.
2. Secure grating to support members with fasteners.
3. Welding is not permitted.
4. Fasteners: Field locate and install.
5. Permit each grating section or plank style grating assembly to be easily removed and replaced.

H. Protect painted surfaces during installation.

I. Should coating become marred, prepare and touch up surface in accordance with paint manufacturer's instructions.

END OF SECTION

SECTION 07 92 00
JOINT SEALANTS

PART 1 GENERAL

1.01 SUBMITTALS

A. Action Submittals:

1. Shop Drawings: Surface preparation instructions. Indicate where each product is proposed to be used.

B. Informational Submittals: Installation instructions.

1.02 ENVIRONMENTAL REQUIREMENTS

A. Ambient Temperature: Between 40 and 80 degrees F (4 and 27 degrees C) when sealant is applied. Consult manufacturer when sealant cannot be applied within these temperature ranges.

PART 2 PRODUCTS

2.01 SEALANT MATERIALS

A. Sealant Characteristics:

1. Uniform, homogeneous.
2. Free from lumps, skins, and coarse particles when mixed.
3. Nonstaining, nonbleeding.
4. Hardness of 15 minimum and 50 maximum, measured by ASTM C661 method.
5. Immersible may be substituted for nonimmersible.

B. Sealant Color: Unless specifically noted, match the color of the principal wall material adjoining the area of application.

C. Type 1-Silicone, Nonsag, Nonimmersible:

1. Silicone base, single-component, chemical curing; ASTM C920, Type S, Grade NS, Class 25.
2. Capable of withstanding movement up to 50 percent of joint width.
3. Manufacturers and Products:
   a. Dow Corning Corp.; No. 790.
   b. General Electric; Silpruf.
   c. Sonneborn; Sonolastic Omniseal.

D. Type 5-One-Part Polyurethane, Immersible:

1. Polyurethane base, single-component, moisture curing; ASTM C920, Type S, Grade NS or P, Class 25.
2. Capable of being continuously immersed in water.
3. Manufacturers and Products for Nonsag:
   a. Sika Chemical Corp.; Sikaflex-1a.
   b. Mameco International; Vulkem 116.
4. Manufacturers and Products for Self-Leveling:
   a. Sonneborn; Sonolastic SL-1.
   b. Mameco International; Vulkem 45.

2.02 BACKUP MATERIAL

A. Nongassing, extruded, closed-cell round polyethylene foam rod, compatible with sealant used, and as recommended by sealant manufacturer.

B. Size: As shown or as recommended by sealant material manufacturer. Provide for joints greater than 3/16 inch wide.

C. Manufacturers and Products:

1. Haveg Industries; Minicel.
2. Dow Corning; Ethafoam SB.
3. Sonneborn; Sonofoam.
4. Hercules, Inc.; HBR.

2.03 ANCILLARY MATERIALS

A. Bond Breaker: Pressure sensitive tape as recommended by sealant manufacturer to suit application.

B. Joint Cleaner: Noncorrosive and nonstaining type, recommended by sealant manufacturer; compatible with joint forming materials.

C. Primer: Nonstaining type recommended by sealant manufacturer to suit application.

PART 3 EXECUTION

3.01 GENERAL

A. Use of more than one material for the same joint is not allowed unless approved by the sealant manufacturer.

B. Install joint sealants in accordance with ASTM C1193.

C. Horizontal and Sloping Joints of 1 Percent Maximum Slope: Use self-leveling (Grade P) joint sealant.

D. Steeper Sloped Joints, Vertical Joints, and Overhead Joints: Use nonsag (Grade NS) joint sealant.

E. Use joint sealant as required for the applicable application and as follows:

Joint Size	Sealant Type
Less than 1"	5
Less than 2"	1
Over 2"	Follow manufacturer's recommendation

3.02 PREPARATION

A. Verify that joint dimensions, and physical and environmental conditions, are acceptable to receive sealant.

B. Surfaces to be sealed shall be clean, dry, sound, and free of dust, loose mortar, oil, and other foreign materials.

1. Mask adjacent surfaces where necessary to maintain neat edge.
2. Starting of work will be construed as acceptance of subsurfaces.
3. Apply primer to dry surfaces as recommended by sealant manufacturer.

C. Verify that joint shaping materials and release tapes are compatible with sealant.

D. Examine joint dimensions and size materials to achieve required width/depth ratios.

E. Carefully follow manufacturer's instructions for mixing multi-component products.

3.03 INSTALLATION

A. Use joint filler to achieve required joint depths, to allow sealants to perform intended function.

1. Install backup material as recommended by sealant manufacturer.
2. Where possible, provide full length sections without splices; minimize number of splices.
3. Tape sealant may be used as joint filler if approved by sealant manufacturer.

B. Use bond breaker where recommended by sealant manufacturer.

C. Seal joints around window, door and louver frames, expansion joints, and elsewhere as indicated.

D. Joint Sealant Materials: Follow manufacturer's recommendation and instructions, filling joint completely from back to top, without voids.

E. Joints: Tool slightly concave after sealant is installed.

1. When tooling white or light color sealant, use a water wet tool.
2. Finish joints free of air pockets, foreign embedded matter, ridges, and sags.

F. Tape Sealant: Compress to 50 percent of expanded thickness and install in accordance with manufacturer's instructions.

3.04 CLEANING

A. Clean surfaces next to the sealed joints of smears or other soiling resultant of sealing application.

B. Replace damaged surfaces resulting from joint sealing or cleaning activities.

3.05 JOINT SEALANT SCHEDULE

A. This schedule lists the sealant types acceptable for each joint location. Use as few different sealant types as possible to meet the requirements of Project.

Joint Locations	Sealant Type(s)
Expansion/Contraction & Control Joints At:	
Concrete Walls (except water-holding & belowgrade portions of structures)	5
Concrete Floor Slabs (except for water-holding Structures)	5
Slabs Subject to Vehicle and Pedestrian Traffic	5
Precast Concrete Wall Panels	5
Material Joints At:	
Wall Penetrations (Exterior)	1,5
Wall Penetrations (Interior)	1,5
Floor Penetrations	5
Roof Penetrations	5
Precast Concrete	1,5

END OF SECTION

SECTION 09 81 00
PIPE TAPE COATING

PART 1 GENERAL

1.01 REQUIREMENT

A. The Work of this section includes the materials, installation, and testing of a prefabricated, cold-applied, multi-layer, and pipeline tape coating system.

B. Except as described in this section, the coating system shall be in accordance with ANSI/AWWA C214 for straight pipe sections and ANSI/AWWA C209 or ANSI/AWWA C216 for fittings and specials.

C. Field coating of joints is specified in Section 09 81 12, Pipe Joint Coating—Weld Before Backfill.

1.02 REFERENCE SPECIFICATIONS, CODES, AND STANDARDS

A. References herein to "SSPC Specifications" or "SSPC" means the published standards of the Society for Protective Coatings.

B. Commercial Standards:

1. ANSI/AWWA C200, Steel Water Pipe 6 Inches and Larger.
2. ANSI/AWWA C205, Cement-Mortar Protective Lining and Coating for Steel Water Pipe—4-Inch and Larger-Shop Applied.
3. ANSI/AWWA C209, Cold-Applied Tape Coatings for the Exterior of Special Sections, Connections, and Fittings for Steel Water Pipelines.
4. ANSI/AWWA C214, Tape Coating Systems for the Exterior of Steel Water Pipelines.
5. ASTM D1000, Methods of Testing Pressure-Sensitive Adhesive Coated Tapes Used for Electrical Insulation.
6. NACE RP-02-74, High Voltage Electrical Inspection of Pipeline Coatings Prior to Installation.

1.03 SUBMITTALS

A. Action Submittals:

1. Coating Materials List: Submit a list of the tape coating materials that indicates the manufacturer, product numbers, thickness, and recommended quality control testing procedures of the materials.
2. Materials Information: For each material, submit technical data sheets that itemize technical and performance information that indicates compliance with this section and recommended application procedures.

3. Samples: Submit samples of the materials for testing by the CONSTRUCTION MANAGER. Clearly identify each sample for catalog number, size, color, and other information required for testing.

1.04 QUALITY ASSURANCE

A. General: Provide the CONSTRUCTION MANAGER a minimum of 7 days advance notice of the start of any shop coating work and a minimum of 3 days advance notice for fieldwork.

B. Unless the CONSTRUCTION MANAGER has granted prior approval, perform coating work in the presence of the CONSTRUCTION MANAGER.

C. Coating Applicator's Experience and Certification: Certified by the coating manufacturer as an approved applicator and have a minimum of 5 years experience installing the submitted coating system.

D. Inspection Devices: Furnish inspection devices that are calibrated and in good working condition for the detection of holidays and measurement of coating film thicknesses.

E. Inspection: Retain the services of trained technicians to test the coating system in the shop and field, and prepare reports. As a minimum, test holiday detection, adhesion testing, and coating film thickness. Perform adhesion testing on each pipe coated during the first full day of coating application and as requested by the CONSTRUCTION MANAGER if surface preparation or coating application is suspect, as determined by the CONSTRUCTION MANAGER.

F. Monitor tape application to straight pipe sections using instrumentation devices that continuously measure and record the tape width drawdown and the tape temperature. Equip each tape application station with the instrumentation devices that measure and record indications that tape tension is properly and uniformly maintained. Control the tape tensions and temperatures using the data obtained from the instrumentation devices.

G. Manufacturer’s Representative: Require the tape material manufacturer to furnish a qualified factory technical representative to visit the pipe coating shop for technical support at the beginning of the tape coating operation and as may be necessary to resolve shop or field problems.

H. Holiday Detection:

1. Prior to application of the first layer of mechanical protection tape, electrically test the inner layer tape for coating flaws with a holiday detector approved by the CONSTRUCTION MANAGER. Repair holidays detected immediately and retest before application of the first layer of mechanical protection tape.
2. Perform complete holiday detection of field coatings and repair defects.

I. UTILITIES' Cathodic Protection Technician or Higher Qualification for Field Inspection: As specified in Section 26 42 01, Pipe Bonding and Test Stations.

J. Cathodic Protection Technician Installation and Testing: As specified in Section 26 42 01, Pipe Bonding and Test Stations.

1.05 DELIVERY, STORAGE, AND HANDLING

A. Handle pipe in accordance with AWWA C214 and in such a manner as to protect the pipe and coating from damage.

B. Do not install coated pipe until the coating has developed full adhesion and cure.

C. Take precaution during coating application, storage, loading, transportation, unloading, and laying and installation to protect and prevent damage to pipe and coating. Lift pipe using slings placed at quarter points along the pipe. Lift pipe with web slings a minimum of 18 inches wide and of a type that will not damage the coating. Do not use metal chains, cable, tongs, forklifts or other equipment likely to damage the coating. Do not drag or skid pipe on grade or in the trench.

D. Provide transportation vehicles with padded bolsters between each layer of pipe and heavy padding under load ties. Curve bolsters to fit the outside of the pipe and 12 inches wide, minimum. Heavily pad pipe contact locations with carpet during shipment to the Site and from the storage yard to the point of installation.

E. Do not store pipe on rocks, gravel, or other hard materials that might damage the coating. Provide padded 12-inch wide skids and chucks, sand bags, select loamy or sand berms, or suspended from cutback ends, where possible, to minimize coating damage. Do not lay pipe on asphalt without suitable padding at contact points.

F. Inspect the pipe at the Site for damage. Repair damage to the pipe or coating as directed if, in the opinion of the CONSTRUCTION MANAGER, a satisfactory repair can be made; otherwise, replace the damaged section.

G. Do not let metal tools or heavy objects come into contact unnecessarily with the finished coating. Do not walk on the coating except when approved by the CONSTRUCTION MANAGER.

PART 2 PRODUCTS

2.01 COATING SYSTEMS

A. Suppliers listed below can usually supply the types of materials specified in this section. Address given is that of the general office; contact these offices for information regarding the location of their representative nearest the project site:

1. Factory and Field Tape Coating Systems:
   a. Polyken Technologies, Mansfield, MA, 02148.
   b. TapeCoat, Evanston, IL, 60240.
   c. Tek-Rap, Inc., Houston, TX, 77213.
2. For clarity, specification references for individual tape products are only made for one manufacturer. Other tape manufacturers' coating systems listed herein have similar acceptable coating products.
3. Factory apply an 80 mils (minimum) thickness tape coating system to the exterior of pipe. Polyken YGIII Tape Coating System, Tapecoat P-TC50 Factory Coating System, Tek-Rap Series 250/255 In-Plant Coating System, or approved equal. Provide the coating system as detailed in following paragraphs.

B. Provide straight pipe sections with a four-layer polyethylene tape system as described below.

1. Storage primer.
2. Primer layer.
3. Filler tape, extruded butyl rubber compound compatible with the primer and tape.
4. Weld striping tape, if required (25 mils).
5. Inner layer, corrosion protection tape (20 mils).
6. Middle layer, mechanical protection tape (30 mils).
7. Outer layer, mechanical protection tape (30 mils) with ultraviolet light stabilizers (Minimum 12 month protection).
8. Total system thickness will be at least 80 mils.
9. Supply coating materials from a single manufacturer with a successful application and service history on pipe fabricated in accordance with ANSI/AWWA C200.
10. Provide the coating system materials as manufactured by Polyken Technologies, or approved equal, as itemized below:
    a. Storage Primer: 924.
    b. Primer: 1019.
    c. Pipe Coating Cutbacks: 924.

d. Filler Tape/Mastic: 939.
e. Weld Stripping Tape: 933-25 black.
f. Inner Layer Tape: 989-20 black.
g. Middle Layer Tape: 955-30 gray.
h. Outer Layer Tape: 956-30 white.
i. Minimum Total Thickness: 80 mils.

C. Field coat access manways, flanges, and couplings with wax tape in accordance with AWWA C217. Use manufacturer's filler to eliminate voids and provide smooth surface for tape.

D. Provide fittings and specials with a three-layer polyethylene tape system as described below:

1. Storage primer.
2. Primer layer.
3. Filler tape, extruded butyl rubber compound compatible with the primer and tape.
4. Inner layer, corrosion protection tape (35 mils).
5. Outer layer, mechanical and ultraviolet light protection tape (35 mils).
6. Total system thickness: 70 mils, minimum.
7. Supply the coating material by the same manufacturer as the materials for straight pipe.
8. Provide the coating system materials for fittings and specials as manufactured by Polyken Technologies, or equal, as itemized below:
   a. Storage Primer: 924.
   b. Primer: 1027.
   c. Filler Tape/Mastic: 939.
   d. Inner Layer Tape: 930-35 white or blue.
   e. Outer Layer Tape: 930-35 white.
   f. Minimum Total Thickness: 70 mils.

E. Provide the following coating where exposed in vaults:

1. As specified in Section 09 90 04, Painting.
2. Extend tape wrap coating on pipe to 6 inches inside vault or structure walls.
3. Field Joints: Provide same coating as specified for exposed pipe in vaults. Prepare surface and apply coating as specified in Section 09 90 04, Painting.

F. Foreign Pipeline Crossings: Provide extra layers of outer tape (for a total of 160 mils) for 100 feet either side of crossings of cathodically protected pipelines. Provide at crossings of CIG gas pipelines.

G. Storage of Materials: Provide materials within the temperature ranges specified for application, using heated storage areas if necessary. Store tape at a temperature between 70 and 120 degrees F.

PART 3 EXECUTION

3.01 TAPE APPLICATION

A. Apply tape coating materials in accordance with this section, the product application instructions of the tape manufacturer, and the field technical support instructions from the manufacturer. The requirements of the applicable AWWA standard apply in the absence of more stringent or more specific requirements of the coating manufacturer or this section.

3.02 WELD SURFACE PREPARATION

A. To provide for an effective, long-term bond between the tape coating system and the substrate, provide the following pipe weld surface preparation.

1. Prior to abrasive blasting, grind longitudinal and coil splice welds to provide a smooth surface with a reinforcement not exceeding 1/32-inch. Verify that the resulting weld surface has a cross-section shape that is free of discontinuities, abrupt changes in curvature, with no ridges or valleys that may promote bridging or disbondment of the tape from the substrate. Exercise special care so that grinding into parent metal does not occur.

3.03 PIPE SURFACE PREPARATION

A. Prepare surface in conformance with current Steel Structures Painting Council (SSPC) Specifications as follows:

1. Solvent Cleaning: SP 1.
2. Hand Tool Cleaning: SP 2.
3. Power Tool Cleaning: SP 3.
4. White Metal Blast Cleaning: SP 5.
5. Commercial Blast Cleaning: SP 6.
6. Brush-Off Blast Cleaning: SP 7.
7. Pickling: SP 8.
8. Near-White Blast Cleaning: SP 10.
9. Power Tool Cleaning to Bare Metal: SP 11.

B. The words “solvent cleaning”, “hand tool cleaning”, “wire brushing”, and “blast cleaning”, or similar words of equal intent in these Specifications or in paint manufacturer’s specifications refer to the applicable SSPC Specifications.

C. Follow OSHA and EPA regulations and coating manufacturer’s recommendations for surface preparation and coating application.

D. Hand tool clean areas that cannot be cleaned by power tool cleaning.

E. Detergent clean surfaces to be coated in accordance with SSPC-SP1 prior to abrasive blasting.

F. Remove burrs, sharp edges, and weld spatter prior to abrasive blasting.

G. Immediately before application of the primer, perform abrasive blasting using sand, metallurgical slag, or a combination of steel grit and shot to produce a surface in conformance with SSPC-SP6. Use steel grit comprising of at least 60 percent of the working mix of abrasive, if a centrifugal wheel abrasive blaster is used. Provide the prepared surface with a surface profile between 1-1/2 and 3 mils.

H. Perform abrasive blasting and primer application when the substrate surface is at least 5 degrees F above the dew point. Perform abrasive blasting, priming, and inner layer tape application during the same working day for each pipe section. Keep the pipe clean and dry. Remove flash rust, imperfections, or contamination on cleaned pipe surface prior to application of primer.

3.04 PIPE END PREPARATION

A. Provide coating cut-backs at the pipe ends 6 inches or as required to accommodate the specific joint or other considerations such as welding, with the cuts parallel to the pipe ends. Protect exposed substrate surfaces with a storage primer applied immediately after taping and before flash rusting of the surface.

B. Grind spiral or longitudinal pipe welds within 18 inches of the pipe ends flush prior to abrasive blast cleaning and coating.

C. Coat pipe ends that will be connected with sleeve-type couplings with polyamide epoxy; Tnemec Series 139 Pota-Pox II, or approved equal. Provide coating cut-backs greater than 6 inches at couplings to provide clearance between the coupling and tape.

3.05 APPLICATION OF TAPE

A. Store primer at a temperature below 120 degrees F and apply when primer temperature is above 50 degrees F minimum or per manufacturer's requirements. Protect primer from inclement weather, freezing or excessive thickening and handle and store per local, state and/or federal regulations.

B. Apply primer using spray-type methods and a drum agitator. Provide a uniform cured primer coat minimum of 0.5 to 1 MDFT, with no skips or misses, free of any runs, sags, and drips. Allow primer to dry to a dry-to-touch condition prior to application of tape layers. Keep primed pipe surface clean, free of any sand, grit, dirt, or other contamination. Repair areas of contamination, runs, and sags, and reprime skips and misses prior to application of tape coating.

C. Maintain pipe shell temperature within a range of 45 degrees F to 100 degrees F during application of the tape system. Additionally, provide shading or other methods to maintain uniform steel temperatures throughout the pipe section during tape application.

D. Maintain tape rolls 70 degrees F for minimum 48 hours or per manufacturer's requirements prior to application. Maintain inner layer tape at a minimum roll body temperature of 70 degrees F during application. Maintain middle and outer layer tapes at a minimum roll body temperature of 90 degrees F during application. Maintain tape temperature within 20 degrees F of pipe surface temperature during application.

E. Maintain tape application tension at a value that produces a tape width reduction equal to 1.5 to 2.0 percent of the tape width during application, as recommended by the tape manufacturer. Constantly maintain this width reduction simultaneously with the minimum tape temperature.

F. At the point of tape application, press tape, including weld stripping tape, onto the pipe with a pressure roller that maintains a constant pressure. Use enough pressure to fully bond the tape at welds. Clean pressure rollers at least once daily.

G. Use filler tape or mastic at lap joints, weld step-downs, and other discontinuities.

H. Use the tape application equipment and materials that result in a fully bonded tape coating system, without blisters, voids, wrinkles or any areas that have a lack of bond to the pipe or previous layers of tape.

I. Apply succeeding layers of tape so that the laps are staggered by at least 2 inches.

J. Electrically holiday test each section of pipe after application of the innerwrap with a holiday tester per the tape manufacturer's directions in accordance with National Association of Corrosion Engineers (NACE) Standard RP-02-74. Repair holidays (defects), if detected, before application of additional tape layers. Repair the holiday area by priming and applying a patch of repair tape. Cover with repair tape a minimum of 4 inches in each direction from damaged area. Retest the repaired area for holidays. Test holidays in middle and outerwrap layers in accordance with tape manufacturer's directions. Make repairs in the Field Tape Coating Repair section of the Specifications.

K. Inspect and test factory-applied tape coating system per AWWA specifications at pipe manufacturer's factory. Ensure coating systems adhere tightly to the pipe surface and the previous tape layers. Remove and replace tape layers with visual damage, wrinkles, voids, disbonded layers, surface contamination, or areas where holidays are detected at the factory.

L. Provide a monitoring system approved by the tape manufacturer that constantly records pipe and tape conditions during coating application. The minimum parameters to be recorded are tape roll body temperature, tape tension, and a summary of holiday inspection testing.

3.06 FIELD QUALITY CONTROL

A. Immediately before the coated pipe is lowered into the trench, provide a visual and field electrical holiday inspection of the coating of the pipe. Conduct testing in accordance with NACE Standard RP-02-74 and the coating manufacturer's written directions for type and thickness of coating being tested. Repair tape coating if damage is found.

3.07 TAPE COATING REPAIR IN THE FIELD

A. Conduct pipe surface preparation, primer application, and tape coating in a continuous operation and complete in the same time period. Store, handle, and apply tape and primer used for field coating of the tape-coated pipeline per AWWA C209 and C214, the tape manufacturer's directions, and these Specifications.

B. Protect and store field tape and primer in a manner as recommended by the tape manufacturer to maintain products above minimum and below maximum recommended temperatures. Do not store tape in stacks above 8 feet high. Store primer and tape in temperatures between 70 and 120 degrees F. Weather conditions and temperatures may require that primer and tape be stored in shade during summer and in a protected and heated location or box until time of application in winter. Apply primer above 50 degrees F.

C. Thoroughly mix primer prior to application and cover (seal) when not in use. Do not dilute primer.

D. Preheat the pipe when moisture collects on the pipe surface, the pipe temperature is below 40 degrees F, or the ambient temperature is below 10 degrees F to prepare the pipe surface for primer and tape application.

E. Shield (tent) the pipe and primed surfaces as required to provide protection from rain, snow, moisture, dust, and contamination or temperatures that are too hot or too cold for good field coating operation.

F. Repair areas where visual damage or holidays are detected. Repair with same number and thickness of the repair coating as the number and thickness of the damaged factory coating layers. Repair tape system consists of field primer and 4- or 6-inch-wide repair tape.

G. Remove damaged coating layers carefully with a sharp knife so as not to damage inner coating. Where outer layers are damaged, electrically holiday test innerwrap, prior to repair of outerwrap. Provide one extra layer of repair tape to areas where coating damage to the base metal is detected.

H. Solvent Wipe: Solvent clean (SSPC-SP-1) areas of oil and grease contamination with an approved solvent. Provide solvent type recommended by coating manufacturer. Extend solvent wipe onto intact coating a minimum of at least 6 to 8 inches past the joint, damaged coating, or contaminated area.

I. Thoroughly mix the primer prior to application. Brush apply primer after the damaged coating area is cleaned and dried. Extend primed area a minimum of 6 inches in each direction from the defective area. The minimum primer thickness will be 1 to 2 MDFT when cured. Keep the primed area free of contamination and allow to dry to dry-to-touch condition before application of the repair tape.

J. Remove release liner just prior to application of the tape to the primed pipe surface. Remove the release liner completely from the tape. Remove the release liner so that no release liner remains on the tape or pipe. Dispose of the release liner in an appropriate manner. Do not leave release liner, tape rolls, or other trash in the pipe ditch. Protect the adhesive surface of the tape to avoid moisture and contamination by foreign materials. Rejection of the field coating will occur if excessive contamination of the pipe or tape surface.

K. Apply repair tape of the same color as the shop applied tape to primed area and press firmly into place. Extend the repair tape a minimum of 4 inches in each direction onto undamaged coatings from the damaged area. If the damaged area is wider than the repair tape width, provide a minimum of 4-inch coverage in each direction by lapping the first tape layer with additional repair tape layers. Lap these layers over the first layer, 1-inch minimum, as required to provide the minimum 4-inch coverage. Start the first layer at the bottom side of the pipe so that additional layers overlap top portion of first layer.

L. When sufficient coverage has been reached in the first layer of repair tape, apply a second layer of repair tape over the first layer in an opposite direction from the first layer to form a cross-hatch pattern. Extend the second layer a minimum of 4 inches in each direction from the damaged area. Provide the second layer a minimum of 1-inch overlap past the first repair tape layer. If holidays are detected in the first layer, repair and retest before the second layer is applied.

M. If a large area has been damaged, over 6 inches in size, apply the outer layer in a cigarette wrap around entire pipe circumference. Overlap cigarette wrap ends a minimum of 6 inches and point downward.

N. Ensure the completed tape repair adheres tightly to the factory coating and presents a smooth unwrinkled appearance.

O. Apply test and repair field coating using experienced personnel, so that the field coating system is equal to the original factory-coated system.

P. Repair areas of visual tape damage. Repair or replace any visual areas of UV degradation of tape coating such as chalking, embrittlement, splits, or cracks in coating. Remove or replace tape with UV damage, wrinkles, voids, disbonded layers, surface contamination, visual damage, or areas where holidays are detected.

3.08 STORAGE AND SHIPMENT

A. See Section 33 05 01.02, Welded Steel Pipe and Fittings—Weld Before Backfill.

3.09 TAPE APPLICATION TO FITTINGS AND SPECIALS

A. Use filler tape to fill voids on fittings, specials, welds, and pipe joints.

B. Provide bell and spigot joints, lap joints, and other locations where voids will otherwise exist, specially shaped, filler tape applied after priming.

C. Prepare field pipe joints as required by the paragraph entitled "Pipe Surface Preparation," except that shop blasted surfaces that have been coated with a storage primer may be power tool cleaned instead of abrasive blast cleaned. Perform the power tool cleaning in accordance with SSPC-SP2. Abrasive blast pipe ends not effectively protected with a storage primer to SSPC-SP6.

3.10 FIELD JOINTS

A. Coat joints as specified in Section 09 81 12, Pipe Joint Coating—Weld Before Backfill, as applicable.

END OF SECTION

SECTION 09 81 12
PIPE JOINT COATING—WELD BEFORE BACKFILL

PART 1 GENERAL

1.01 REQUIREMENT

A. Except as described in this section, the coating system shall be in accordance ANSI/AWWA C216 for field joints.

1.02 REFERENCE SPECIFICATIONS, CODES, AND STANDARDS

A. References herein to "SSPC Specifications" or "SSPC" means the published standards of the Society for Protective Coatings.

B. Commercial Standards:

1. NACE RP-02-74, High Voltage Electrical Inspection of Pipeline Coatings Prior to Installation.
2. ANSI/AWWA C216, Heat-Shrinkable, Cross-Linked Polyolefin Coatings for the Exterior of Special Sections, Connections, and Fittings for Steel Water Pipelines.

1.03 SUBMITTALS

A. Action Submittals:

1. Materials List: Submit a list of the joint coating materials that indicates the manufacturer, product numbers, thickness, and recommended quality control testing procedures of the materials.
2. Materials Information: For each material, submit technical data sheets that itemize technical and performance information that indicates compliance with this section and recommended application procedures.
3. Samples: Submit samples of the materials for testing by the CONSTRUCTION MANAGER. Clearly identify each sample for catalog number, size, color, and other information required for testing.

1.04 QUALITY ASSURANCE

A. Inspection Devices: Furnish inspection devices that are calibrated and in good working condition for the detection of holidays.

B. Inspection: Retain the services of trained technicians to test the coating system in the field, and prepare reports. As a minimum, test holiday detection.

C. Manufacturer's Representative: Require the heat shrinkable sleeve manufacturer to furnish a qualified factory technical representative to visit the field for technical support at beginning of the field coating operation and as may be necessary to resolve field problems.

D. Holiday Detection: Perform holiday detection of field coatings and repair defects.

E. UTILITIES' Cathodic Protection Technician or Higher Qualification for Field Inspection: As specified in Section 26 42 01, Pipe Bonding and Test Stations.

F. Cathodic Protection Technician Installation and Testing: As specified in Section 26 42 01, Pipe Bonding and Test Stations.

1.05 DELIVERY, STORAGE, AND HANDLING

A. Store heat shrinkable sleeves in accordance with manufacturers written instructions.

PART 2 PRODUCTS

2.01 COATING SYSTEMS

A. Heat Shrinkable Sleeves:

1. Berry Plastics:
   a. Primer: As recommended by sleeve manufacturer.
   b. Mastic: Polyken 939-125 filler.
   c. Heat Shrink Sleeve: WPCT/B.
   d. Minimum Total Thickness: 90 mils.
2. Canusa-CPS; ShawCor:
   a. Primer: As recommended by sleeve manufacturer.
   b. Mastic: Aqua-Shield RG Filler.
   c. Heat Shrink Sleeve: Aqua-Shield AQW.
   d. Minimum Total Thickness: 90 mils.
3. Or approved equal.

PART 3 EXECUTION

3.01 HEAT-SHRINKABLE COATING APPLICATION

A. As specified in AWWA C216 and as described below:

1. Prepare field pipe joints as follows:
   a. Power tool clean shop blasted surfaces that have been coated with a storage primer in accordance with SSPC-SP3.
   b. Abrasive blast pipe ends not effectively protected with a storage primer to SSPC-SP6.

2. Apply filler tape at lap joints, step-downs, and other discontinuities.
3. Fit coating material to area as recommended by manufacturer based on type and recovery of material.
4. Shrink the coating material to tightly conform to pipe joint and overlap shop coating using manufacturer's recommended heat sources and methods.

B. Completely remove and replace finish coatings with wrinkles, gaps, holes, or burns until acceptable coverage is achieved.

C. Coating application is prohibited when there is water or slurry in bell holes.

D. Apply coating to field joints using only personnel trained by heat shrinkable sleeve manufacturer.

3.02 FIELD QUALITY CONTROL

A. Electrical Coating Inspection:

1. Electrically test field applied coatings with a portable high-voltage holiday detector. Test areas as directed by the CONSTRUCTION MANAGER. Provide equipment and conduct testing in accordance with NACE Standard RP-0274 and the coating manufacturer's written directions for type and thickness of coating being tested. Furnish one portable high-voltage detector for each pipe laying crew.
2. Set electrical holiday test equipment at voltage as recommended by coating manufacturer. Set the minimum test voltage for a particular coating type and thickness to be within 20 percent of the voltage as determined by the following formula:

$$\textit{Testing Voltage} = 1250\sqrt{T}$$

Where T = Average coating thickness in mils (0.001 inch)

3. Provide the type of detector with the minimum and maximum voltage setting, inspection speed, and holiday detector electrode type (wire brush or electrically conductive silicone or coil spring) as recommended by the coating manufacturer for the coating type and thickness being tested. Maintain the holiday test equipment in good working condition per detector manufacturer's recommendations.
4. Adjust the holiday detector during testing to the correct voltage setting and operate in accordance with holiday detector manufacturer recommendations. Recheck voltage setting at start of each day and a minimum of two times during the day and when requested by CONSTRUCTION MANAGER.

5. Provide the holiday detector with an audible signal when electrical contact is made between the pipeline and the electrode at holidays (defects) in the coating. Provide a good ground and a low electrical resistance between the holiday detector and the pipeline. Make only direct connections to uncoated areas or to the pipe ends at the pipe joint cut back areas.
6. Clean and dry the pipe surface when testing. To avoid damage to the coating, the electrode always be kept in motion while test voltage is being applied. Always keep the electrode in firm contact with the coated surface. Move the electrode in an even manner over the surface at an approximate rate of 0.5 to 1 foot of travel per second. Do not exceed 1 foot of travel per second as the maximum rate of speed during holiday testing.
7. Mark location of detected holidays for repair. Retest after repair.

END OF SECTION

SECTION 09 90 04
PAINTING

PART 1 GENERAL

1.01 REQUIREMENT

A. The Work of this section includes the materials application, testing, and clean up of painting as described herein.

1.02 REFERENCES

A. The following is a list of standards which may be referenced in this section:

1. NACE International (NACE): RP0188, Discontinuity (Holiday) Testing of New Protective Coatings on Conductive Substrates.
2. The Society for Protective Coatings (SSPC):
   a. PA 1, Shop, Field, and Maintenance Painting.
   b. PA 2, Measurement of Dry Coating Thickness with Magnetic Gages.
   c. PA 3, Guide to Safety in Paint Applications.
   d. SP 1, Solvent Cleaning.
   e. SP 2, Hand Tool Cleaning.
   f. SP 3, Power Tool Cleaning.
   g. SP 5, Joint Surface Preparation Standard White Metal Blast Cleaning.
   h. SP 6, Joint Surface Preparation Standard Commercial Blast Cleaning.
   i. SP 7, Joint Surface Preparation Standard Brush-Off Blast Cleaning.
   j. SP 10, Joint Surface Preparation Standard Near-White Blast Cleaning.
   k. SP 11, Power Tool Cleaning to Bare Metal.
   l. SP 12, Surface Preparation and Cleaning of Steel and Other Hard Materials by High- and Ultrahigh-Pressure Water Jetting Prior to Recoating.
   m. SP 13, Surface Preparation of Concrete.
3. NSF International (NSF): 61 Drinking Water Components—Health Effects.

1.03 DEFINITIONS

A. Terms used in this section:

1. Coverage: Total minimum dry film thickness in mils or square feet per gallon.
2. MDFT: Minimum Dry Film Thickness, mils.
3. MDFTPC: Minimum Dry Film Thickness Per Coat, mils.
4. Mil: Thousandth of an inch.
5. PSDS: Paint System Data Sheet.
6. PVC: Polyvinyl Chloride.
7. SP: Surface Preparation.

1.04 SUBMITTALS

A. Action Submittals:

1. Shop Drawings:
   a. Product Data Sheets:
      1) For each paint system, furnish Paint System Data Sheet (PSDS), manufacturer's technical data sheets, and paint colors available (where applicable). Sample PSDS form is appended to end of this section.
      2) Submit required information on a system-by-system basis.
      3) Furnish copies of paint system submittals to coating applicator.
      4) Indiscriminate submittal of manufacturer's literature is not acceptable.

B. Informational Submittals:

1. Applicator's Experience: List of references substantiating this requirement as specified.
2. Manufacturer's written verification that submitted products are suitable for the intended use.
3. Factory Applied Coatings: Manufacturer's certification stating factory applied coating system meets or exceeds requirements specified herein.
4. If manufacturer of finish coating differs from that of shop primer, provide both manufacturers' written confirmation that materials are compatible.
5. Coating Manufacturer's Certificate of Compliance, in accordance with Section 01 43 33, Manufacturers' Field Services.

1.05 QUALITY ASSURANCE

A. Applicator's Experience: Minimum 5 years' practical experience in application of specified products.

B. Regulatory Requirements:

1. Meet federal, state, and local requirements limiting emission of volatile organic compounds.
2. Perform surface preparation and painting in accordance with recommendations of the following:
   a. Paint manufacturer's instructions.
   b. SSPC PA 3, Guide to Safety in Paint Applications.
   c. Federal, state, and local agencies having jurisdiction.

1.06 DELIVERY, STORAGE, AND HANDLING

A. Deliver materials to Site in unopened containers that plainly show designated name, date of manufacture, color, and manufacturer.

B. Store paints in a protected area that is heated or cooled to maintain temperature range recommended by paint manufacturer.

1.07 PROJECT CONDITIONS

A. Environmental Requirements:

1. Do not apply paint in temperatures outside of manufacturer's recommended maximum or minimum allowable, or in dust, smoke-laden atmosphere, damp or humid weather.
2. Do not perform abrasive blast cleaning whenever relative humidity exceeds 85 percent, or whenever surface temperature is less than 5 degrees F above dewpoint of ambient air. Strictly adhere to coating manufacturer's recommendations.

1.08 EXTRA MATERIALS

A. Provide small quantity kits for touchup painting and for painting other small areas.

B. Fusion Bonded Coating: Provide appropriate liquid repair kits for field use.

PART 2 PRODUCTS

2.01 MANUFACTURERS

A. Use a nationally recognized paint manufacturer of paints and protective coatings regularly engaged in production of such materials that have essentially identical service conditions as this Project.

B. Minimum of 5 years of verifiable experience in manufacture of specified products.

2.02 ABRASIVE MATERIALS

A. Select abrasive type and size to produce surface profile that meets coating manufacturer's recommendations for specific primer and coating system to be applied.

2.03 PAINT MATERIALS

A. General:

1. Material Quality: Manufacturer's highest quality products and suitable for the intended service.
2. Materials Including Primer and Finish Coats: Produced by same paint manufacturer.
3. Thinners, Cleaners, Driers, and Other Additives: As recommended by paint manufacturer of particular coating.

B. Products:

Product	Definition
Bituminous Paint	Single-component, coal-tar pitch based
Epoxy Primer	Converted epoxy primer containing rust-inhibitive pigments
Fusion Bonded Coating	100% solids, thermosetting, fusion bonded, dry powder epoxy, suitable for the intended service
High Build Epoxy	Polyamide or polyamidoamine epoxy, minimum 69% volume solids, capability of 4 to 8 MDFT per coat
Polyurethane Enamel	Two-component, aliphatic or acrylic based polyurethane; high gloss finish
NSF Epoxy	Polyamide epoxy, approved for potable water contact and conforming to NSF 61.

2.04 COLORS

A. Provide as shown for equipment and appurtenances and designated herein selected by UTILITIES.

B. Formulate with colorants free of lead, lead compounds, or other materials that might be affected by presence of hydrogen sulfide or other gas likely to be present at the Site.

C. Proprietary identification of colors is for identification only. Any authorized manufacturer may supply matches.

2.05 SHOP FINISHES

A. Shop Blast Cleaning: Reference paragraph Shop Coating Requirements, this section.

B. Surface Preparation: Provide CONSTRUCTION MANAGER minimum 7 days' advance notice to start of shop surface preparation work and coating application work.

C. Shop Coating Requirements:

1. When required by equipment Specifications, prime and finish coat such equipment in shop by manufacturer and touch up in field with identical material after installation.
2. Where manufacturer's standard coating is not suitable for intended service condition, ENGINEER may approve use of a tie-coat to be used between manufacturer's standard coating and specified field finish. In such cases, provide tie-coat of surface tolerant epoxy as recommended by manufacturer of specified field finish coat. Coordinate details of equipment manufacturer's standard coating with field coating manufacturer.

PART 3 EXECUTION

3.01 GENERAL

A. Surface Preparation Inspection:

1. Inspect and provide substrate surfaces prepared in accordance with these Specifications and printed directions and recommendations of paint manufacturer whose product is to be applied. In event of conflict, more stringent applies.
2. Notify CONSTRUCTION MANAGER minimum 7 days' prior to start of surface preparation work or coating application work.
3. Perform work only in presence of CONSTRUCTION MANAGER.

B. For coatings subject to immersion, obtain full cure for completed system. Consult coatings manufacturer's written instructions for these requirements. Do not immerse coating until completion of curing cycle.

C. The intention of these Specifications is for new, interior and exterior metal and submerged metal surfaces to be painted, whether specifically mentioned or not, except as modified herein. Exterior concrete surfaces will not be painted, unless specifically indicated herein.

D. Perform painting in accordance with recommendations of the following:

1. Paint manufacturer's instructions.
2. Federal, state, and local agencies having jurisdiction.

3.02 PROTECTION OF MATERIALS NOT TO BE PAINTED

A. Protect surfaces adjacent to, or downwind of Work area from overspray. Repair damages resulting from overspray.

B. Remove, mask, or otherwise protect hardware, lighting fixtures, switchplates, aluminum surfaces, machined surfaces, couplings, shafts, bearings, nameplates on machinery, and other surfaces not specified elsewhere.

C. Provide drop cloths to prevent paint materials from falling on or marring adjacent surfaces.

D. Protect working parts of mechanical and electrical equipment from damage.

E. Mask openings in motors to prevent paint and other materials from entering the motors.

3.03 FIELD SANDBLASTING

A. Perform sandblasting for items and equipment where specified, and as required to restore damaged surfaces previously shop or field blasted and primed. Meet requirements of the Society for Protective Coatings for materials, equipment, and procedures.

3.04 PREPARATION OF SURFACES

A. Metal Surface Preparation:

1. General:
   a. Submit samples prior to surface preparation blasting.
   b. Conform to current Society for Protective Coatings specifications as follows:
      1) Solvent Cleaning: SP 1.
      2) Hand Tool Cleaning: SP 2.
      3) Power Tool Cleaning: SP 3.
      4) White Metal Blast Cleaning: SP 5.
      5) Commercial Blast Cleaning: SP 6.
      6) Brush-Off Blast Cleaning: SP 7.
      7) Near-White Blast Cleaning: SP 10.
      8) Power Tool Cleaning to Bare Metal: SP 11.
      9) High Pressure Water Jetting: SP 12.
      10) Surface Preparation of Concrete: SP 13.

c. Where OSHA or EPA regulations preclude standard abrasive blast cleaning, wet- or vacu-blast methods may be required. Follow coatings manufacturers' recommendations for wet-blast additives and first coat application.
d. Hand-tool clean areas that cannot be cleaned by power-tool cleaning.

2. Blast Cleaning Requirements:
   a. Comply with applicable federal, state, and local, air pollution and environmental control regulations for blast cleaning and disposition of spent aggregate and debris.
   b. Alternatives to standard abrasive blast cleaning methods subject to ENGINEER review and approval prior to starting work.

B. Plastic and FRP Surface Preparation:

1. Hand sand with medium grit sandpaper to provide tooth for coating system.
2. Large areas may be power sanded or brush-off blasted, provided sufficient controls are employed so surface is roughened without removing excess material.

3.05 PAINT MIXING

A. Multiple-Component Coatings:

1. Prepare using the contents of container for each component as packaged by paint manufacturer.
2. No partial batches will be permitted.
3. Do not use multiple-component coatings that have been mixed beyond their pot life.
4. Mix only components specified and furnished by paint manufacturer.
5. Do not intermix additional components for reasons of color or otherwise, even within same generic type of coating.

B. Keep paint materials sealed when not in use.

C. Where more than one coat of material is applied within given system, alternate color to provide visual reference that required number of coats has been applied.

3.06 PAINT APPLICATION

A. General:

1. Inspection: Schedule with CONSTRUCTION MANAGER in advance for cleaned surfaces and coats prior to succeeding coat.

2. Apply coating in accordance with paint manufacturer's recommendations. Allow sufficient time between coats to assure thorough drying of previously applied paint.
3. Fusion Bonded Coating Application: Electrostatic, fluidized bed, or flocking.
4. Paint units to be bolted together and to structures, prior to assembly or installation.
5. Extent of Coating (Immersion): Apply coatings to internal vessel and pipe surfaces, nozzle bores, flange gasket sealing surfaces, carbon steel internals, and stainless steel internals, unless otherwise specified.

B. Shop Primed or Factory Finished Surfaces:

1. Inspection: Schedule inspection for compliance with Specifications of shop primed or factory finished items with CONSTRUCTION MANAGER in advance of delivery to the Site.
2. Hand or power sand areas of chipped, peeled, or abraded coating, feathering the edges. Follow with a spot primer using specified primer.
3. For two-package or converted coatings, consult coatings manufacturer for specific procedures as relates to manufacturer's products.
4. Prior to application of finish coats, clean shop-primed surfaces free of dirt, oil, and grease and apply mist coat of specified primer, 1-mil dry film thickness.
5. After welding, prepare and prime holdback areas as required for specified paint system. Apply primer in accordance with manufacturer's instructions.

C. Manufacturer Applied Paint Systems:

1. Repair abraded areas on factory finished items in accordance with the equipment manufacturer's directions.
2. Carefully blend repaired areas into original finish.

3.07 FIELD QUALITY CONTROL

A. Testing:

1. Test Gauges to be Provided:
   a. Magnetic type dry film thickness gauge, to test coating thickness specified in mils, as manufactured by Nordson Corp., Anaheim, CA; Mikrotest.
   b. Electrical holiday detector, low voltage, wet sponge type, to test completed coating systems, 20 mils or less MDFT, for holidays and discontinuities as manufactured by Tinker and Rasor, San Gabriel, CA, Model M-1.

2. Number of Coats:
   a. Minimum required, irrespective of coating thickness.
   b. Additional coats may be required to obtain minimum required paint thickness, depending on method of application, differences in manufacturers' products, and atmospheric conditions.
3. Application Thickness:
   a. Do not exceed coating manufacturer's recommendations.
   b. Use wet film thickness gauge to measure proper coating thickness during application.
4. Film Thickness Measurement and Electrical Inspection of Coated Surface:
   a. Perform with properly calibrated instruments.
   b. Recoat and repair as necessary for compliance with Specifications.
   c. Coats will be subject to inspection by CONSTRUCTION MANAGER and coating manufacturer's representative.
5. Visually inspect plastic surfaces to ensure proper and complete coverage has been attained.
6. Give particular attention to edges, angles, flanges, and other similar areas, where insufficient film thickness are likely to be present, and ensure proper millage in these areas.
7. Apply additional coats as required to complete hiding of underlying coats. Complete hiding so that additional coats would not increase hiding.
8. Thickness and Continuity Testing:
   a. Measure coating thickness specified in mils with magnetic type dry film thickness gauge in accordance with SSPC PA2.
   b. Check each coat for correct millage. Do not make measurement within 8 hours, minimum, after application of coating.
   c. Test finish coat, 20 mils thick or less, for holidays and discontinuities with electrical holiday detector, low voltage, wet sponge type in accordance with NACE RP0188.
   d. After repaired and recoated areas have dried sufficiently, retest each repaired area. Final test may also be conducted by CONSTRUCTION MANAGER.

B. Damaged Coatings, Pinholes, and Holidays:

1. Feather edges and repair in accordance with recommendations of paint manufacturer.
2. Hand or power sand visible areas of chipped, peeled, or abraded paint, and feather edges. Follow with primer and finish coat in accordance with Specifications. Depending on extent of repair and appearance, finish sanding and topcoat may be required.
3. Repair fusion bonded coatings as recommended by original applicator.

4. Apply finish coats, including touchup and damage-repair coats, in a manner, which will present uniform texture and color-matched appearance.

C. Unsatisfactory Application:

1. Clean and top coat surfaces found to have improper finish color or insufficient film thickness.
2. Evidence of runs, bridges, shiners, laps, or other imperfections will be cause for rejection.
3. Repair defects in coating system per written recommendations of coating manufacturer.
4. Leave staging up until CONSTRUCTION MANAGER has inspected surface or coating. Replace staging removed prior to approval by CONSTRUCTION MANAGER.

3.08 MANUFACTURER'S SERVICES

A. In accordance with Section 01 43 33, Manufacturers' Field Services, have coating manufacturer's representative present at Site as follows:

1. On first day of application of any coating.
2. Minimum of two additional Site inspection visits as required to resolve field problems attributable to, or associated with, manufacturers' product.
3. As required to verify full cure of coating prior to coated surfaces being placed into immersion service.

3.09 CLEANUP

A. Place cloths and waste that might constitute fire hazard in closed metal containers or destroy at end of each day.

B. Upon completion of work, remove staging, scaffolding, and containers from Site or destroy in legal manner.

C. Completely remove paint spots, oil, or stains from adjacent surfaces and floors and leave entire job clean.

3.10 PROTECTIVE COATINGS SYSTEMS

A. System No. 1 Submerged Metal:

Surface Prep.	Paint Material	Min. Coats, Cover
SP5, White Metal Blast cleaning	NSF Epoxy	3 coats, 3 MDFT PC

B. System No. 5 Exposed Metal:

Surface Prep.	Paint Material	Min. Coats, Cover
SP 10, Near-White Metal Blast Cleaning	Epoxy Primer	1 coat, 2.5 MDFT
	Polyurethane Enamel	1 coat, 3 MDFT

C. System No. 27 Aluminum and Dissimilar Metal Insulation:

Surface Prep.	Paint Material	Min. Coats, Cover
SP 1, Solvent Cleaning	Prime in accordance with manufacturer's recommendations	
	Bituminous Paint	1 coat, 10 MDFT

D. System No. 29 Fusion Bonded Coating:

Surface Prep.	Paint Material	Min. Coats, Cover
SP 10, Near-White Blast Cleaning	Fusion Bonded Coating 100% Solids Epoxy	1 or 2 coats, 7 MDFT

3.11 SURFACES NOT REQUIRING PAINTING

A. Unless otherwise stated herein or shown, the following areas or items will not require painting:

1. Concrete and masonry surfaces.
2. Nonferrous and corrosion-resistant ferrous alloys such as copper, bronze, Monel, aluminum, chromium plate, atmospherically exposed weathering steel, and stainless steel, except where:
   a. Required for electrical insulation between dissimilar metals.
   b. Aluminum and stainless steel are embedded in concrete or masonry, or aluminum is in contact with concrete or masonry.
   c. Color coding of equipment and piping is required.
3. Nonmetallic materials such as glass, wood and porcelain, except as required for architectural painting or color coding.
4. Prefinished electrical and architectural items such as motor control centers, switchboards, switchgear, panelboards, transformers, disconnect switches, acoustical tile, cabinets, elevators, building louvers, wall panels, color coding of equipment is required.
5. Nonsubmerged electrical conduits attached to unpainted concrete surfaces.
6. Cathodic protection anodes.

7. Items specified to be galvanized after fabrication, unless specified elsewhere or subject to immersion.
8. Insulated piping and insulated piping with jacket will not require exterior coating, except as required for architectural painting or color coding.

3.12 PAINT APPLICATION SCHEDULE

A. Unless otherwise shown or specified in these Specifications, paint or coat Work in accordance with the following application schedule. In event of discrepancies or omissions in the following, request clarification from CONSTRUCTION MANAGER before starting work in question.

B. System No. 1 Submerged Metal: Use on the following items or areas:

1. Metallic surfaces subject to immersion or that are part of the immersed equipment.
2. Underside of access manway covers.

C. System No. 5 Exposed Metal: Use on the following items or areas:

1. Exposed metal surfaces, located inside or outside of structures.

D. System No. 27 Aluminum and Dissimilar Metal Insulation: Use on aluminum surfaces embedded or in contact with concrete.

E. System No. 29 Fusion Bonded Coating: For steel pipe and fittings, meet the requirements of AWWA C213. Use where specified and where shown on Drawings.

3.13 SUPPLEMENT

A. The supplement listed below, following "End of Section," is a part of this Specification:

1. Data Sheet: Paint System Data Sheet (PSDS).

END OF SECTION

SUPPLEMENT

PAINT SYSTEM DATA SHEET

Complete and attach manufacturer's Technical Data Sheet to this PSDS for each coating system.

Paint System Number (from Spec.):		
Paint System Title (from Spec.):		
Coating Supplier:		
Representative:		
Surface Preparation:		
Paint Material (Generic)	**Product Name/Number (Proprietary)**	**Min. Coats, Coverage**

Provide manufacturer's recommendations for the following parameters at temperature (F)/relative humidity:

Temperature/RH	**50/50**	**70/30**	**90/25**
Induction Time			
Pot Life			
Shelf Life			
Drying Time			
Curing Time			
Min. Recoat Time			
Max. Recoat Time			

Provide manufacturer's recommendations for the following:

Mixing Ratio: _____

Maximum Permissible Thinning:_____

Ambient Temperature Limitations: min.:_____ max.:_____

Surface Temperature Limitations: min.:_____ max.:_____

Surface Profile Requirements: min.:_____ max.:_____

Attach additional sheets detailing manufacturer's recommended storage requirements and holiday testing procedures.

SECTION 09 90 05
POLYURETHANE COATING

PART 1 GENERAL

1.01 REQUIREMENT

A. The work of this section includes the materials, installation, and testing of a polyurethane pipe coating system.

B. Except as described in this section, the coating system shall be in accordance with ANSI/AWWA C222 for straight pipe sections, fittings, and specials, ANSI/AWWA C209 for flanges, and ANSI/AWWA C216 for field joints.

C. Field coating of joints is specified in Section 09 81 12, Pipe Joint Coating—Weld Before Backfill.

1.02 REFERENCES

A. General: The latest revision of the following minimum standards apply to the coating materials, testing, and installation except where standards that are more stringent are applicable.

1. American Water Works Association (AWWA): C222, Polyurethane Coatings for Interior and Exterior of Steel Water Pipe and Fittings.
2. ASTM International (ASTM): D4541, Standard Test Method for Pull-Off Strength of Coatings Using Portable Adhesion Testers.
3. National Association of Corrosion Engineers (NACE), Recommended Practice RP-274, High Voltage Electrical Inspection of Pipeline Coatings Prior to Installation.
4. Steel Structures Painting Council (SSPC):
   a. SP-1, Solvent Cleaning Surface Preparation.
   b. SP-2, Hand Tool Cleaning Surface Preparation.
   c. SP-3, Power Tool Cleaning Surface Preparation.
   d. SP-6, Commercial Abrasive Blast Surface Preparation.
   e. SP-10, Near White Metal Abrasive Blast Surface Preparation.

1.03 DEFINITIONS

A. Manufacturer's Representative: Employee of manufacturer who is factory trained and knowledgeable in technical aspects of their products and systems.

1.04 ABBREVIATIONS

A. ANSI: American National Standards Institute.

B. AWWA: American Water Works Association.

C. MDFT: Minimum Dry Film Thickness.

D. Mil: Thousandths of an Inch.

E. OSHA: Occupational Safety and Health Act.

F. SSPC: Steel Structures Painting Council.

1.05 SUBMITTALS

A. General:

1. Make submittals in accordance with Section 01 33 00, Submittal Procedures.
2. Submit catalog cuts and other manufacturer's information for materials provided on a system-by-system basis.
3. Provide copies of paint system submittals to the coating applicator.
4. Indiscriminate submittal of manufacturer's literature only is not acceptable.

B. Coating Systems Data Sheets:

1. For each paint system, furnish a Material Safety Data Sheet (MSDS), the manufacturer's technical data sheets, and paint colors available (where applicable) for each product used in paint system.
2. Technical and performance information that demonstrate compliance with Specification.
   a. Provide certification of attendance at the coating manufacturer’s training class within the last 3 years for personnel applying the coating system.
3. Provide to the CONSTRUCTION MANAGER a copy of the manufacturer’s coating application quality assurance manual prior to beginning coating application.

1.06 QUALITY ASSURANCE

A. Coating Applicator's Experience and Certification: Certified by the coating manufacturer as an approved applicator and have a minimum of 5 years experience installing the submitted coating system.

B. Provide a qualified technical representative, employed by the coating manufacturer, in the shop and the field for 1 day, minimum, at the start of coating application. During this visit, the manufacturer’s representative will conduct inspections as required to ensure that coating application is in conformance with their recommended methods and conditions.

C. Provide additional visits by the manufacturer's representative at sufficient intervals during surface preparation and coating application as may be required for product application quality assurance, and to determine compliance with manufacturer's instructions, and as may be necessary to resolve problems attributable to, or associated with, manufacturer's products furnished for this Project.

D. UTILITIES' Cathodic Protection Technician or Higher Qualification for Field Inspection: As specified in Section 26 42 01, Pipe Bonding and Test Stations.

E. Cathodic Protection Technician Installation and Testing: As specified in Section 26 42 01, Pipe Bonding and Test Stations.

1.07 OBSERVATION OF WORK

A. Give the CONSTRUCTION MANAGER a minimum of 7 days' advance notice of the start of any Work to allow scheduling for shop observation.

B. Make provisions to allow CONSTRUCTION MANAGER or ENGINEER's representative full access to the Work and appropriate documentation regarding coating application.

C. CONSTRUCTION MANAGER or ENGINEER may elect to observe materials for suitability prior to or during incorporation into the Work, including compliance with proper storage of materials and with material expiration dates.

1.08 DELIVERY, STORAGE, AND HANDLING

A. Handle pipe in accordance with AWWA C222 and in such a manner as to protect the pipe and coating from damage.

B. Do not install coated pipe until the coating has developed full adhesion and cure.

C. Protect and prevent damage to pipe and coating during coating application, storage, loading, transportation, unloading, laying and installation. Lift pipe using slings placed at quarter points along the pipe. Lift pipe with web slings a minimum of 8 inches wide and of a type that will not damage the coating. Do not use metal chains, cable, tongs, forklifts or other equipment likely to damage the coating. Do not drag or skid pipe on grade or in the trench.

D. Provide transportation vehicles with padded bolsters between each layer of pipe and heavy padding under load ties. Curve bolsters to fit the outside of the pipe and 12 inches wide, minimum. Heavily pad pipe contact locations with carpet during shipment to the Site and from the storage yard to the point of installation.

E. Do not store pipe on rocks, gravel, or other hard materials that might damage the coating. Provide padded 12-inch wide skids and chucks, sand bags, select loamy or sand berms, or suspended from cutback ends, where possible, to minimize coating damage. Do not lay pipe on asphalt without suitable padding at contact points.

F. Inspect pipe at the Site for damage. Repair damage to the pipe or coating as directed if, in the opinion of the CONSTRUCTION MANAGER or ENGINEER, a satisfactory repair can be made; otherwise, replace the damaged section.

G. Do not let metal tools or heavy objects to come into contact unnecessarily with the finished coating. Do not walk on the coating except as approved by the CONSTRUCTION MANAGER.

PART 2 PRODUCTS

2.01 GENERAL

A. Store, handle, and apply coatings per the manufacturer's written directions. Clean and coat exterior pipe surfaces in accordance with referenced AWWA Standards, written directions of the coating manufacturer, and these Specifications, whichever is more stringent. Prepare other surfaces to be coated as required for steel pipe, as applicable.

B. Provide polyurethane coating from a single manufacturer. Multiple manufactures will not be permitted.

2.02 EXTERIOR SHOP-APPLIED COATINGS

A. Plural Component Polyurethane:

1. Apply plural component polyurethane coating system (referred to hereafter as polyurethane system) in accordance with AWWA C222, except as modified herein.
2. Coating: Self-priming, plural component, 100 percent solids, polyurethane, suitable for burial or immersion, and the product of one of the following approved manufacturers:
   a. Futura Coatings (Protec II), Hazelwood, Missouri.
   b. Chemline (Chemthane 2261/2265), St Louis, Missouri.
   c. No substitutions.

2.03 FIELD EXTERIOR JOINT COATING

A. Field coat pipe joints as specified in Section 09 81 12, Pipe Joint Coating—Weld Before Backfill.

2.04 FIELD REPAIR OF COATINGS

A. General: Provide field coating compatible with the shop-applied coating system or by the same manufacturer.

B. Polyurethane Coating:

1. Repair polyurethane coating system in accordance with the coating manufacturer's recommended procedures.
2. Provide coating material for repairs greater than 6 inches diameter the same as the existing coating, or for repairs less than 6 inches diameter, repair coating as recommended by the polyurethane coating manufacturer, subject to the ENGINEER approval. Provide repair coating with adhesion and performance characteristics equal to the existing coating.

2.05 FIELD COATINGS

A. Field coat access manways, flanges, and couplings with tape in accordance with AWWA C217. Use manufacture's filler to eliminate voids and provide a smooth surface for tape.

PART 3 EXECUTION

3.01 GENERAL

A. Inspect and provide substrate surfaces prepared in accordance with these Specifications and the printed directions and recommendations of coating manufacturer whose product is to be applied.

3.02 ENVIRONMENTAL CONTROLS

A. General:

1. Provide heating, cooling, or dehumidification equipment as required to meet the surface preparation and coating application environmental requirements as specified and recommended by the coating manufacturer.
2. Provide products that comply with federal, state, and local requirements limiting the emission of volatile organic compounds and worker exposure.
3. Comply with applicable federal, state, and local, air pollution and environmental control regulations for surface preparation, blast

cleaning, disposition of spent aggregate and debris, and coating application.

4. Do not perform abrasive blast cleaning whenever the relative humidity exceeds 85 percent, whenever surface temperature is less than 5 degrees F above the dew point of the ambient air.
5. Do not apply coatings when:
   a. Surface and ambient temperatures exceeds the maximum or minimum temperatures recommended by the paint manufacturer or these Specifications,
   b. In dust or smoke-laden atmosphere, blowing dust or debris, damp or humid weather, or under conditions that could cause icing on the metal surface.
6. Where weather conditions or Project requirements dictate, provide and operate heaters and/or dehumidification equipment to allow pipe surfaces be abrasive blasted and coated as specified and in accordance with the manufacturer's written coating application recommendations.

B. Temperature Control:

1. When temperatures are above or below the coating manufacturer's written recommended application temperatures, provide temperature controls to permit Work to proceed within the temperature limitations of the Project.
2. Heat with indirect fired heaters that do not increase humidity levels within the Work area. Size heaters for the area to be heated.
3. Provide tenting, baffles, or bulkheads as required to zone and control the heating or cooling effectiveness.

3.03 SHOP-APPLIED COATING SYSTEM

A. General:

1. Applicator Qualifications:
   a. Equipment will be certified by the coating manufacturer to meet the requirements for material mixing, temperature control, application rate, and ratio control for multi-part coatings.
   b. Equipment not meeting the written requirements of the coating manufacturer will be rejected for coating application until repairs or replacement of the equipment is made to the satisfaction of the ENGINEER.
2. Strict conformance to the requirements of the manufacturer’s coating application manual will be required. Deviation from the requirements of the manual will be grounds for the CONSTRUCTION MANAGER and ENGINEER to reject the applied coating. Remove rejected coating to bare metal and reapply using proper application methods in accordance with the manufacturer’s coating quality assurance manual and the requirements of these Specifications.

3. Coating applied under improper environmental conditions will be rejected and removed to bare metal and reapplied under proper environmental conditions.
4. Pipes and other items that exceed the allowable quantity of coating defects, regardless of size or cause, will be rejected and the coating removed to bare metal and recoated.

B. Surface Preparation:

1. Remove visible oil, grease, dirt, and contamination in accordance with SSPC-SP1, solvent cleaning.
2. Remove surface imperfections such as metal slivers, burrs, weld splatter, gouges, or delaminations in the metal by filing or grinding prior to abrasive surface preparation.
3. In cold weather or when moisture collects on the pipe and the temperature of the pipe is less than 45 degrees F, preheat pipe to a temperature above 50 degrees F and 5 degrees F above dew point.
4. Clean pipe by abrasive blasting with a mixture of steel grit and shot to produce the surface preparation cleanliness as specified. Clean recycled abrasive of debris and spent abrasive.
5. Protect prepared pipe from humidity, moisture, and rain. Keep pipe clean, dry, and free of flash rust. Remove flash rust, imperfections, or contamination on cleaned pipe surface by reblasting prior to coating application.
6. Complete coating of pipe the same day as surface preparation.
7. Surface Preparation: SSPC-SP10, Near White Metal blast, 3.0 mil profile, minimum, or as required by the manufacturer, whichever is greater.

C. Polyurethane Coating Application:

1. Maintain pipe temperature between coating manufacturer's written recommendations and 5 degrees F above dew point during coating application. Perform coating application in an environmentally controlled area that meets or exceeds the written environmental application requirements of the coating manufacturer.
2. Thickness: One coat, 30 mils total dry film thickness, minimum. Additional thickness may be required to pass the holiday and coating defects limitations as specified in this section.
3. Where pipeline crosses existing cathodically protected pipelines, thicken coating to 60 mils dry film thickness for 100 feet either side of crossing. Provide at non-cased crossings of FVA water pipelines.
4. Test coating adhesion and holiday testing as specified in this section.
5. Complete coating repairs as specified in this section.

D. Holdbacks and Cutbacks:

1. 6 inches, minimum.
2. Make coating cutbacks or holdbacks straight and cut through the full thickness of the coating. Complete cutbacks in a manner that permits field coating of joints in accordance with the manufacturer's recommendations and as specified herein.

E. Polyurethane Coating Repairs:

1. Complete shop coating repairs in accordance with the manufacturer's written instructions and these Specifications, whichever is more stringent.
2. Defects as a result of the application process will not be allowed more than two per 100 square feet of surface area per joint of pipe or an individual defect greater than 6 inches in diameter. Holidays within a 4-inch radius of a holiday are counted as a single holiday.
3. Pipe segments with repairs exceeding 5 percent of the surface area are subject to rejection.
4. Blast pipes exceeding the maximum number or size of coating defects to bare metal and recoat.
5. Return pipe arriving in the field with defects or repairs exceeding the maximum number or size of coating defects to the shop for recoating.
6. Repair surface defects, that do not expose the metal substrate by power tool sanding with coarse sandpaper to roughen the coating surface and feathering the edges of the defect for a minimum of 3 inches around the defect. Apply a single coat of the specified patch coating material to a properly prepared surface at the specified coating thickness.
7. Prepare deep defects, defined as defects that penetrate to the metal substrate or expose the metal substrate, or large defects, defined as larger than 6 inches, by power tool sanding to expose the metal and feather the coating edges a minimum of 6 inches. Reblast the metal surface and surrounding coating to equal cleanliness and profile as the original surface preparation. Roughen existing coating to the equivalent of coarse sandpaper by abrasive blasting. Apply one coat of the specified coating material over the repaired surface at the specified thickness.

3.04 FIELD COATING OF JOINTS

A. Coat joints as specified in Section 09 81 12, Pipe Joint Coating—Weld Before Backfill, as applicable.

3.05 FIELD REPAIR OF COATING

A. General:

1. Repair areas where holidays are detected or coating is visually damaged, such as blisters, tears, rips, bubbles, wrinkles, cuts, or other defects. Repair areas where no holidays are detected, but are visually damaged.
2. Clean area to be repaired for a minimum distance of 6 inches in each direction from the damaged area by solvent wiping.
3. Pipe segments with repairs exceeding 5% of the surface area are subject to rejection.

B. Polyurethane Coating Repairs:

1. Complete field coating repairs in accordance with the manufacturer's written instructions and these Specifications, whichever is more stringent.
2. Repair surface defects, that do not expose the metal substrate by power tool sanding with coarse sandpaper to roughen the coating surface and feathering the edges of the defect for a minimum of 3 inches around the defect. Apply a single coat of the specified patch coating material to a properly prepared surface at the specified coating thickness.
3. Prepare deep defects, defined as defects that penetrate to the metal substrate or expose the metal substrate, or large defects, defined as larger than 6 inches, by power tool sanding to expose the metal and feather the coating edges a minimum of 6 inches. Reblast the metal surface and surrounding coating to equal cleanliness and profile as the original surface preparation. Roughen existing coating to the equivalent of coarse sandpaper by abrasive blasting. Apply one coat of the specified coating material over the repaired surface at the specified thickness.

3.06 INSPECTION AND TESTING

A. General:

1. Conduct quality control inspection and testing by the applicator of the applied coatings in accordance with these Specifications. Applicator to determine the frequency of testing and inspections.
2. CONSTRUCTION MANAGER’s or ENGINEER’s representative will conduct quality assurance inspection and testing as defined herein for final acceptance of the pipeline coatings. Applicator quality control testing will not be acceptable for product acceptance. Make coating repairs for quality assurance testing by the applicator as specified herein.

B. Adhesion Testing:

1. General
   a. Provide a minimum of four adhesion tests on four separate pipe segments for every production day.
   b. Repair coating damage from adhesion testing.
   c. Perform adhesion tests not less than 24 hours after coating application.
   d. Pipe joints will be randomly selected for adhesion testing. If any one of the pipe joints tested fails the adhesion test, each pipe joint will then be individually tested from that production day for adhesion and accepted or rejected on a joint-by-joint basis.
2. Polyurethane Adhesion Testing:
   a. Provide polyurethane coatings with an adhesion to steel of 1,500 pounds per square inch, absolute minimum.
   b. Any single spot test measurement less than 1,500 pounds per square inch is grounds for rejection.
   c. Test polyurethane coating adhesion to steel substrates using pneumatic pull off equipment, in accordance with ASTM D4541, except as modified in this section.
   d. Glue dollies for adhesion testing to the coating surface and allow to cure for a minimum of 12 hours. Score coating around the dolly prior to conducting the adhesion test. Provide dollies concave or convex to fit the pipe surface on any pipe less than 30 inches in diameter.
   e. No cohesive failure is allowable. Cohesive failure is grounds for rejection.
   f. Randomly select repair patches on the polyurethane coating for adhesion testing in a manner as described herein and at the discretion of the person conducting the adhesion tests. Inter-coat adhesion of repairs not less than 50 percent of the specified polyurethane coating adhesion requirements to steel.
3. Holiday Testing:
   a. Polyurethane Coatings:
      1) Conduct holiday tests on the completed coating after a minimum of 1-hour cure using a high voltage spark test in accordance with NACE Standard RP-274 and these Specifications.
      2) Perform holiday testing at a voltage of 100 volts per mil of the minimum coating thickness.
4. Dry Film Thickness Testing: Test coatings for dry film thickness in accordance with SSPC PA-2 using a properly calibrated magnetic pull off or eddy current equipment.

3.07 FIELD QUALITY CONTROL

A. Immediately before the coated pipe is lowered into the trench, provide a visual and field electrical holiday inspection of the coating of the pipe.

B. Electrical Coating Inspection:

1. Electrically test field applied coatings and pipe coating repairs with a portable high-voltage holiday detector. Test areas as directed by the CONSTRUCTION MANAGER. Provide equipment and conduct testing in accordance with NACE Standard RP-02-74 and the coating manufacturer's written directions for type and thickness of coating being tested. Furnish one portable high-voltage detector for each pipe laying crew.
2. Set electrical holiday test equipment at voltage as recommended by coating manufacturer. Set the minimum test voltage for a particular coating type and thickness to be within 20 percent of the voltage as determined by the following formula:

$$\textit{Testing Voltage} = 1250\sqrt{T}$$

Where T = Average coating thickness in mils (0.001 inch)

3. Provide the type of detector with the minimum and maximum voltage setting, inspection speed, and holiday detector electrode type (wire brush or electrically conductive silicone or coil spring) as recommended by the coating manufacturer for the coating type and thickness being tested. Maintain the holiday test equipment in good working condition per detector manufacturer's recommendations.
4. Adjust the holiday detector during testing to the correct voltage setting and operate in accordance with holiday detector manufacturer recommendations. Recheck voltage setting at start of each day and a minimum of two times during the day and when requested by CONSTRUCTION MANAGER.
5. Provide the holiday detector with an audible signal when electrical contact is made between the pipeline and the electrode at holidays (defects) in the coating. Provide a good ground and a low electrical resistance between the holiday detector and the pipeline. Make only direct connections to uncoated areas or to the pipe ends at the pipe joint cut back areas.

6. Clean and dry the pipe surface when testing. To avoid damage to the coating, the electrode always be kept in motion while test voltage is being applied. Always keep the electrode in firm contact with the coated surface. Move the electrode in an even manner over the surface at an approximate rate of 0.5 to 1 foot of travel per second. Do not exceed 1 foot of travel per second as the maximum rate of speed during holiday testing.
7. Mark location of detected holidays for repair. Retest after repair.

END OF SECTION

SECTION 26 42 00
PIPELINE GROUNDING SYSTEM

PART 1 GENERAL

1.01 THE REQUIREMENT

A. Provide zinc ribbon grounding mats for the raw water pipeline at test stations and appurtenances, and a zinc ribbon grounding system at other locations as shown.

1.02 REFERENCES

A. The following is a list of standards that may be referenced in this Section:

1. American National Standards Institute (ANSI): C80-1, Rigid Steel Conduit-Zinc Coated.
2. American Society for Testing and Materials (ASTM):
   a. A53, Pipe, Steel, Black and Hot-Dipped, Zinc-Coated Welded and Seamless.
   b. A497, Steel Welded Wire Fabric, Deformed, for Concrete Locator Code.
   c. A615, Deformed and Plain Billet-Steel Bars for Concrete Reinforcement.
   d. B124, Copper and Copper-Alloy Forging Rod, Bar, and Shapes.
   e. B418, Standard Specification for Cast and Wrought Galvanic Zinc Anodes.
   f. D1785, Poly(Vinyl Chloride) (PVC) Plastic Pipe, Schedules 40, 80, and 120.
3. National Electrical Manufacturers Association (NEMA):
   a. WC 3, Rubber-Insulated Wire and Cable for the Transmission and Distribution of Electrical Energy.
   b. WC 5, Thermoplastic-Insulated Wire and Cable for the Transmission and Distribution of Electrical Energy.
   c. WC 7, Cross-Linked-Thermosetting-Polyethylene-Insulated Wire and Cable for the Transmission and Distribution of Electrical Energy.
4. National Fire Protection Association (NFPA): 70, National Electrical Code (NEC).
5. Underwriters Laboratories Inc. (UL): 6, Rigid Metal Electrical Conduit.

1.03 DEFINITIONS

A. Ferrous Metal Pipe: Pipe made of steel or iron and pipe containing steel or iron as a principle structural material, except reinforced concrete.

B. Lead, Lead Wires, Joint Bonds, Cable: Insulated copper conductor; the same as wire.

1.04 SUBMITTALS

A. Furnish submittals in accordance with Section 01 33 00, Submittal Procedures.

B. Shop Drawings:

1. Catalog cuts and other information for products to be used.
2. Overall System Wiring Diagram: Identify location of connections, label markings, wire size, color, and products.

C. Quality Assurance Submittals: Manufacturers' Certificates of Compliance.

D. Field Test and Inspection Reports.

1.05 QUALITY ASSURANCE

A. UTILITIES' Cathodic Protection Technician or Higher Qualification for Field Inspection: As specified in Section 26 42 01, Pipe Bonding and Test Stations.

B. Cathodic Protection Technician Installation and Testing: As specified in Section 26 42 01, Pipe Bonding and Test Stations.

1.06 PACKAGING AND SHIPPING

A. Secure and package coil wires as required to prevent damage during shipment.

PART 2 PRODUCTS

2.01 ZINC RIBBON AND ZINC RIBBON GROUNDING MATS

A. Material: Zinc alloy meeting the requirements of ASTM B418, Type II.

B. Anode Core: Continuous galvanized steel wire, 0.135-inch diameter.

C. Compliance Statement: Furnish a compliance statement guaranteeing that the zinc ribbon supplied meets the requirements of this Specification.

D. Weight: 0.60 pound per linear foot.

E. Dimensions: 1/2-inch wide by 9/16-inch thick.

F. Minimum Coil Lengths: As required.

2.02 WIRES

A. General: Conform to applicable requirements of NEMA WC 5 and WC 7. Provide single conductor wires, unless otherwise specified.

B. Test Station: As specified in Section 26 42 01, Pipe Bonding and Test Stations.

C. Zinc Ribbon: No. 6 stranded copper with 600-volt HMWPE insulation, as indicated.

2.03 CATHODIC PROTECTION TEST STATIONS

A. As specified in Section 26 42 01, Pipe Bonding and Test Stations.

2.04 SHUNTS

A. Holloway Type RS, 0.01 ohm, 6 ampere capacity.

2.05 ANCILLARY MATERIALS

A. As specified in Section 26 42 01, Pipe Bonding and Test Stations.

2.06 MARKING TAPE

A. Inert polyethylene, impervious to known alkalis, acids, chemical reagents, and solvents likely to be encountered in soil.

B. Thickness: Minimum 4 mils.

C. Width: 12 inches.

D. Identifying Lettering: Minimum 1-inch high, permanent black lettering imprinted continuously over entire length.

E. Manufacturers and Products:

1. Reef Industries; Terra Tape.
2. Allen; Markline.

F. Color: Red with black lettering as follows: "COLORADO SPRINGS UTILITIES -- ELECTRICAL WIRES BURIED BELOW".

2.07 THERMITE WELD MATERIALS

A. As specified in Section 26 42 01, Pipe Bonding and Test Stations.

B. Welders and Cartridges for Zinc Ribbon Connections: For splicing steel cores of zinc ribbon and connecting copper wires to steel cores of zinc ribbon, use Cadweld Type PC welders sized to fit the application. Contact Erico Products for specific information related to welder numbers and cartridge sizes.

C. Manufacturers:

1. Erico Products Inc. (Cadweld), Cleveland, OH.
2. Continental Industries, Inc. (Thermo-Weld), Tulsa, OK.

PART 3 EXECUTION

3.01 INSTALLATION

A. Construct zinc ribbon grounding mats for test stations and appurtenances.

B. Construct zinc ribbon grounding mats for test stations and appurtenances as shown on the Drawings.

C. Construct zinc ribbon grounding system parallel to buried steel pipe at each end of the construction package as shown on the Drawings. Construct 1,500-foot length of grounding ribbon at each end of the construction package. Connect grounding ribbon to the pipeline at these locations through the test station as shown on the Drawings.

D. Conform to NFPA 70.

3.02 ZINC RIBBON GROUND INSTALLATION

A. General:

1. Install the zinc ribbon at the location and depths indicated. Position zinc ribbon on level, smooth trench bed free of any sharp objects.
2. Provide 6-inch minimum cover of thoroughly compacted native backfill around the zinc ribbon ground system placed parallel to the pipeline.
3. Provide gravel backfill for test station and appurtenance grounding mats as indicated.
4. Provide minimum spacing of 36 inches from other buried metallic structures.

B. Wire Connections: Make attachment of the lead wires to the zinc ribbon by removing the zinc to expose the steel. Make zinc ribbon-to-lead wire connection with thermite weld materials as specified above. Spirally wrap splices (minimum of 50 percent overlap) with two layers of high voltage rubber splicing tape and two layers of vinyl electrical tape. Extend tape 1 inch minimum onto zinc ribbon.

C. Make connection of the zinc ribbon grounding system and test station grounding mat to the pipe through test stations as shown.

D. Make connection of the zinc ribbon appurtenance grounding mat directly to the appurtenance as shown on the Drawings, using a minimum of 3 feet of No. 6 AWG HMPE insulated copper wire. Direct connection of the steel core in the ribbon to the pipe or appurtenance will not be acceptable. Avoid creating safety or trip hazards with wire connections to appurtenances within vaults. Install conduit through vault wall for wire connections to appurtenances.

E. Splice connections along longitudinal zinc ribbon runs at approximately 500-foot intervals or as approved by the CONSTRUCTION MANAGER.

3.03 TEST STATION INSTALLATION

A. As specified in Section 26 42 01, Pipe Bonding and Test Stations.

3.04 WIRE CONNECTIONS

A. Thermite Weld:

1. Use thermite weld method for electrical connection of copper wire to steel surfaces. Observe proper safety precautions, welding procedures, thermite weld material selection, and surface preparation recommended by the welder manufacturer. Assure that the pipe or fitting wall thickness is of sufficient thickness that the thermite weld process will not damage the integrity of the pipe or fitting wall or protective lining.
2. After the weld connection has cooled, remove slag, visually inspect, and physically test wire connection by tapping with a hammer; remove and replace defective connections.

B. For thermite weld connections to pipe, apply thermite weld cap over each completed connection. Repair exposed metal surfaces not covered by the resin and mortar in accordance with the coating manufacturer's recommendations.

3.05 WIRE INSULATION REPAIR

A. Handle wires with care. Spirally wrap damage to the wire insulation (50 percent overlap, minimum) with two layers of high-voltage rubber splicing tape and two layers of vinyl electrical tape. Make wire splices with suitable sized compression connectors or mechanically secure and solder with rosin cored 50/50 solder. Obtain splices approval by the CONSTRUCTION MANAGER.

3.06 TESTS AND INSPECTION

A. Test Equipment: As specified in Section 26 42 01, Pipe Bonding and Test Stations.

B. Functional Testing: Perform tests to ensure proper installation and operation of the zinc ribbon anode grounding system and ground mats. These tests consist of the following:

1. Structure-to-Soil Potential Measurements:
   a. Measure the structure-to-soil potential of the pipeline at each test station using the equipment specified herein. Make structure-to-soil potential measurements at the surface with a portable copper-copper sulfate reference electrode and the permanent reference electrode installed at each test station. Make structure-to-soil potential measurements within 1 week of the pipeline installation (after the zinc ribbon anode is connected).
   b. Take structure-to-soil potential measurements on wires at each location and record.
2. Zinc Ribbon Current Measurements: Measure and record the zinc ribbon direct current at each test station using the specified shunts. Measure the current at the same time as the structure-to-soil potential measurements are taken.
3. Records: Tabulate structure-to-soil and ribbon current measurements, with the date and test location, and submit to the CONSTRUCTION MANAGER as specified above.

3.07 AC MITIGATION TESTS

A. AC Mitigation Tests:

1. AC Potential Measurements: Measure the AC potential of test station wires and other aboveground metallic connections to the pipe, such as combination air release and vacuum valve piping and blowoff pump-out piping. Measure the AC potential with a high impedance voltmeter and a suitable ground electrode.

2. AC Current Measurements: Measure the AC current between the pipe and the zinc ribbon grounding systems using the specified shunts. Make AC current measurements made with the shunts with a high impedance AC voltmeter. Assume that the AC impedance of the shunt is 0.01 ohm. Also, measure the AC current between the pipeline and each zinc ribbon grounding system with a suitable AC clamp-on ammeter.

B. Test Intervals: Perform AC mitigation tests on 5 successive days in the early morning or early evening when the powerline is at or near maximum load.

C. Records and Report: Summarize AC mitigation test data and submit to the CONSTRUCTION MANAGER for review. Include test data, date and time of test, soil conditions, and any other pertinent data in report.

END OF SECTION

SECTION 26 42 01
PIPE BONDING AND TEST STATIONS

PART 1 GENERAL

1.01 THE REQUIREMENT

A. Provide wires, reference electrodes, thermite weld materials, ancillary materials, and insulating joints. The Work includes installation and testing of materials as described herein.

1.02 REFERENCES

A. The following is a list of standards that may be referenced in this section:

1. American Concrete Institute (ACI): 301, Standard Specification for Structural Concrete.
2. American National Standards Institute (ANSI): C80.1, Rigid Steel Conduit - Zinc Coated (GRC).
3. ASTM International (ASTM):
   a. A497, Specification For Steel Welded Wire Reinforcement, Deformed, For Concrete.
   b. A615/A615M, Standard Specification for Deformed and Plain Billet-Steel Bars for Concrete Reinforcement.
   c. B418, Standard Specification for Cast and Wrought Galvanic Zinc Anodes.
   d. C94, Standard Specification for Ready-Mixed Concrete.
   e. C387, Standard Specification for Packaged, Dry, Combined Materials for Mortar and Concrete.
4. NACE International (NACE): SP0169, Recommended Practice for Control of External Corrosion on Underground or Submerged Metallic Piping Systems.
5. National Electrical Manufacturers Association (NEMA):
   a. TC 2, Electrical Plastic Tubing (EPT) and Conduit (EPC-40 and EPC-80).
   b. WC 70, Nonshielded Power Cables Rated 2000 volts or less for Distribution of Electrical Energy.

1.03 DEFINITIONS

A. Electrical Isolation: Condition of being electrically isolated from other metallic structures (including, but not limited to, piping, reinforcement, casings) and the environment as defined in NACE SP0169.

B. Electrically Continuous Pipeline: Pipeline that has a linear electrical resistance equal to or less than the sum of the resistance of the pipe plus the maximum allowable bond resistance for each joint as specified in this section.

C. Ferrous Metal Pipe: Pipe made of steel or iron, or pipe containing steel or iron as a principal structural material, except reinforced concrete pipe.

D. Foreign-Owned: Buried pipe or cable not specifically owned or operated by UTILITIES.

E. Lead, Lead Wire, Joint Bonds, Pipe Connecting Wires, Cable: Insulated copper conductor; the same as wire.

1.04 SUBMITTALS

A. Action Submittals: Catalog cuts and other information for products proposed for use.

B. Informational Submittals:

1. Manufacturer's Certificate of Compliance, in accordance with Section 01 43 33, Manufacturers' Field Services.
2. Field Test Reports.
3. Qualifications of Cathodic Protection Specialist and Technician.

1.05 QUALITY ASSURANCE

A. UTILITIES' Cathodic Protection Technician or Higher Qualification for Field Inspection:

1. UTILITIES will provide their own independent NACE Cathodic Protection Technician to inspect and test the Work.
2. UTILITIES' NACE Cathodic Protection Technician will test selected components of each system installed to confirm the accuracy of the CONTRACTOR's testing, prior to acceptance.
3. Coordinate the Work to allow UTILITIES' NACE Cathodic Protection Technician to perform inspection and testing.

B. Cathodic Protection Installation and Testing: Provide experienced personnel to install and test the cathodic protection system. UTILITIES' independent Cathodic Protection Technician shall review the individual experience and qualifications of the CONTRACTOR's proposed corrosion protection staff. If, in the opinion of the CONSTRUCTION MANAGER, the qualifications and experience of the personnel is not adequate, the CONTRACTOR shall provide additional training; or provide other qualified personnel approved by the CONSTRUCTION MANAGER

PART 2 PRODUCTS

2.01 WIRES

A. Conform to applicable requirements of NEMA WC 70.

B. Joint Bond:

1. General: Single-conductor, stranded copper wire with 600-volt HMWPE insulation. Supply joint bonds complete with formed copper sleeve on each end of wire.
2. Push-On, Mechanical, or Flanged Joints: 2 AWG wires, 18 inches long.
3. Flexible Coupling Joints: No. 2 AWG wires, 24 inches long, with two 12-inch-long THHN insulated No. 12 AWG wire pigtails, as manufactured by Erico Products Inc. (Cadweld), Cleveland, OH.

C. Test Station: Single-conductor, No. 8 AWG stranded copper with 600-volt HMWPE insulation.

D. Insulation Colors: As indicated below and as shown on Drawings.

1. Blue: Water.
2. Black: Anode lead.
3. Yellow: Buried electrode.
4. Orange: Casing.
5. White: Remote monitoring wires or remote testing.

2.02 CATHODIC PROTECTION TEST STATIONS

A. Test Stations in Unimproved Areas: Post mount test station consisting of an enclosure and terminal board with studs and galvanized rigid conduit.

1. Manufacturer and Product:
   a. Maloney Technical Products; Model V3 Phantom Splice/Test Station.
   b. No substitutions accepted.

2.03 PERMANENT REFERENCE ELECTRODES

A. Prepackaged Copper-Copper Sulfate Reference Electrodes:

1. Material: Permanent type, copper-copper sulfate reference electrode suitable for direct burial with a minimum design life of 15 years.
2. Dimensions: 1-1/2 inches diameter by 6 inches long, minimum.
3. Wire: No. 12 AWG solid copper wire with yellow, 600-volt RHH-RWH insulation. Attach wire to electrode and insulate with manufacturer's standard connection. Make connection stronger than the wire.

4. Backfill: Manufacturer's special low resistivity gypsum-bentonite backfill in permeable cloth bag.
5. Packaging: Furnish electrode packaged in a plastic or heavy paper bag of sufficient thickness to protect electrode, backfill, and cloth bag during normal shipping and handling.
6. Manufacturers and Products:
   a. Borin Manufacturing; Model SRE-007-CUY.
   b. Electrochemical Devices, Inc.; Model UR-CUG-CW.
   c. GMC Electrical, Inc.; Model CU-1-UGPC.

2.04 ZINC GROUNDING CELL

A. Prepackaged Zinc Grounding Cell:

1. Two zinc anodes isolated by a 1-inch nonmetallic spacer prepackaged in manufacturer's special low resistivity gypsum-bentonite.
2. Weight: 60-pound zinc weight.

2.05 THERMITE WELD MATERIALS

A. General: Thermite weld materials consist of wire sleeves, welders, and weld cartridges according to weld manufacturer's recommendations for each wire size and pipe or fitting size and material. Provide welding materials and equipment of a single manufacturer. Interchanging materials of different manufacturers is not acceptable.

B. Molds: Graphite. Ceramic "One-Shot" molds not acceptable.

C. Adapter Sleeves:

1. For No. 2 AWG wires.
2. Prefabricated factory sleeve joint bonds or bond wires with formed sleeves made in field are acceptable. Attach field-formed joint bond sleeves with appropriate size and type of hammer die furnished by thermite weld manufacturer.
3. Extend wire conductor 1/4 inch beyond end of sleeve.

D. Cartridges: Cast iron thermite weld cartridges for cast and ductile iron pipe and fittings.

1. Maximum Cartridge Size: 25 grams for steel and 32 grams for cast and ductile iron materials, respectively.

E. Welders and Cartridges: For attaching copper wire to pipe material:

Pipe Material	Weld Type	Cartridge Size, Max.
No. 4 AWG Wire & Smaller:		
Ductile Iron	HB, VH, HE	32 gm
Steel	HA, VS, HC	25 gm
No. 2 AWG Joint Bonds:		
Ductile Iron	FC	32 gm
Steel	FS	25 gm

F. Welding Materials Manufacturers:

1. Erico Products Inc. (Cadweld), Cleveland, OH.
2. Continental Industries, Inc. (Thermo-Weld), Tulsa, OK.

G. Thermite Weld Coating:

1. Thermite Weld Caps: Prefabricated weld cap with coating and suitable primer, such as Handy Cap II with Royston Primer 747, as manufactured by Royston Laboratories, Inc.
2. Insulating Resin: 100 percent solids epoxy that can cure in submerged or buried conditions. Bitumastic coating (Carboline Bitumastic 50 or equal) may be used if it is allowed to dry completely before covering.
3. Use products recommended by pipe or fitting coating manufacturer to repair spot damage at thermite weld connections not covered by standard pipeline coating repair procedure or thermite weld cap.

2.06 ANCILLARY MATERIALS

A. Mastic Coating: TC Mastic (Brush Applied) as manufactured by Tapecoat Co., Evanston, IL.

B. Wire Connectors: One-piece, tin-plated crimp-on lug connector as manufactured by Burndy Co. or Thomas and Betts.

C. Compression Connectors:

1. For in-line, tap, and multisplice, furnish “C” taps made of conductive wrought copper, sized to fit wires being spliced.
2. Manufacturer and Product: Burndy; Type “YC.”

D. Electrical Tape:

1. Linerless rubber high-voltage splicing tape and vinyl electrical tape suitable for moist and wet environments.
2. Manufacturer and Product: 3M Products; Scotch 130 C and Scotch 88.

2.07 CONCRETE

A. Furnish as specified in Section 03 30 10, Structural Reinforced Concrete.

2.08 INSULATING JOINTS

A. Insulating Joints: Dielectric unions, flanges, or couplings.

1. Complete Assembly: ANSI rating equal to or higher than that of joint and pipeline.
2. Provide materials resistant for the intended exposure, operating temperatures, and products in the pipeline.

B. Flange Insulating Kits:

1. Gaskets: Full-face Type F with elastomeric sealing element(s). Retain sealing element in a groove within retainer portion of gasket.
2. Insulating Sleeves: Full-length fiberglass reinforced epoxy (NEMA G-10 grade)
3. Insulating Washers: Fiberglass reinforced epoxy (NEMA G-10 grade).
4. Steel Washers: Plated, hot-rolled steel, 1/8 inch thick.
5. Provide components of flange insulating kits in sizes required. Field modification of the materials provided is not allowed.
6. Manufacturers:
   a. Pacific Seal, Inc., Burbank, CA.
   b. Advance Products and Systems, Lafayette, LA.

C. Flexible Insulated Couplings: As specified in Section 40 27 00, Process Piping—General.

D. Insulating Unions: O-ring sealed with molded and bonded insulating bushing to union body, as manufactured by Central Plastics Co., Shawnee, OK.

PART 3 EXECUTION

3.01 INSTALLATION

A. Construct system of pipe joint bonds to form an electrically continuous pipeline. Install pipeline insulating joints, and test stations.

3.02 PIPE JOINT BONDING

A. Electrically bond joints of buried steel and ductile iron pipe, including manhole piping and fittings, and including restrained joints, except joints specified to be threaded, welded, or insulated.

B. Install two joint bond wire assemblies at each joint that requires bonding.

C. Use thermite weld process for electrical connection of wires to pipe and fittings.

D. Test each bonded joint for continuity.

3.03 TEST STATION INSTALLATION

A. Determine location of test stations based on actual site conditions and as approved by CONSTRUCTION MANAGER.

B. Locate test stations as follows: As shown on the Drawings.

C. Attach test wires to pipe.

D. Locate post mounted test stations 5 feet off centerline of pipe and at protected locations such as fences, road crossings, and edges of cultivated land.

E. Bury test and reference electrode wires a minimum of 36 inches below finished grade.

F. Make wire connections to test station terminals with crimp-on spade lug terminals, except where solid wire is specified or terminal strips with tubular clamps are used.

G. Wire Labels:

1. Install on conductors in boxes.
2. Materials suitable for permanent identification.
3. Plastic, paper, or cloth markers will not be permitted.
4. Position markers in boxes so that they do not interfere with operation and maintenance.
5. Include pipe diameter and pipe type, reference electrode, casing, or galvanic anode, as applicable.

3.04 CONDUITS

A. Secure conduits entering test station boxes with double locknuts, one on outside and one on inside.

B. Install insulated bushings and insulated throat connectors on ends of rigid metallic conduit.

C. Use watertight couplings and connectors. Install and equip boxes and fitting to prevent water from entering conduit or box. Seal unused openings.

3.05 CONCRETE

A. Install and provide concrete in conformance to the requirements for concrete in Section 03 30 10, Structural Reinforced Concrete, for flush mounted test stations.

3.06 REFERENCE ELECTRODE INSTALLATION

A. Remove plastic or paper wrapper and place reference electrode within pipeline trench excavation 6 inches from below centerline of pipe in a vertical or horizontal position. Install reference electrode within 18 inches of foreign pipelines, between foreign and UTILITIES' pipeline.

B. Backfill reference electrodes with native trench material. Terminate wires in test stations.

3.07 WIRE CONNECTIONS

A. Make wire connections to pipe after joint coatings have been applied, tested, and repaired. Remove a 3-inch by 3-inch area of joint coating on bell end of joint to access steel at joint.

B. Thermite Weld:

1. Use thermite weld method for electrical connection of copper wire to steel surfaces. Observe proper safety precautions, welding procedures, thermite weld material selection, and surface preparation recommended by the welder manufacturer. Assure that the pipe or fitting wall thickness is of sufficient thickness that thermite weld process will not damage integrity of pipe or fitting wall or protective lining.
2. After weld connection has cooled, remove slag, visually inspect, and physically test wire connection by tapping with a hammer; remove and replace any defective connections.
3. Install prefabricated thermite weld cap over each completed connection. Repair exposed metal surfaces not covered by thermite weld cap in accordance with coating manufacturer's recommendations. Repair damage to pipe lining in accordance with lining applicator's recommendations.

3.08 WIRE INSULATION REPAIR

A. Handle wires with care. Spirally wrap damage to wire insulation (50 percent overlap, minimum) with two coats of high-voltage rubber splicing tap and two layers of vinyl electrical tape. Make wire splices with suitable sized compression connectors or mechanically secure and solder with rosin cored 50/50 solder. Obtain approval of splices by CONSTRUCTION MANAGER.

3.09 INSULATED JOINTS

A. Install insulated joints to electrically isolate pipeline from other structures where shown and at dissimilar metal connections.

B. Align and install insulating joints according to manufacturer's recommendations to avoid damaging insulating materials.

C. After assembly of insulated flanges, prepare cement-mortar surface in accordance with paint manufacturer's instructions and apply a 20-mil minimum thickness of EPA potable water approved, 100 percent solids water or air curing epoxy coating to interior of pipeline. Apply coating for a minimum of two pipe diameter lengths from insulating flange in both directions. Apply and cure coating in accordance with manufacturer's recommendations. Do not apply coating where it will interfere with operation of pipeline valves or other pipeline assemblies.

3.10 TESTS AND INSPECTION

A. Test Equipment: Before construction begins, obtain test equipment necessary for electrical continuity testing, and the following equipment:

1. Model 601, Above-Ground 702, Buried Insulation Checker, as manufactured by Gas Electronics Co., Seymour, MO.
2. A Model 77 Series III, Digital Multimeter, with case and test leads, as manufactured by Fluke Corporation, Everett, WA.
3. Two Model 6B copper-copper sulfate reference electrodes as manufactured by Tinker and Rasor, San Gabriel, CA.
4. 1 quart of copper sulfate antifreeze solution.
5. 1/2 pound of copper sulfate crystals.

B. Store test equipment at Site and maintain in accurately calibrated, working condition. Make test equipment available to CONSTRUCTION MANAGER for testing purposes. Upon completion of Project, turn over test equipment listed above to CONSTRUCTION MANAGER in clean, accurate, and fully functional condition, along with operating manuals, test wires, and cases supplied with equipment.

C. Electrical Continuity Testing:

1. Provide necessary equipment and materials and make electrical connections to pipe as required to test continuity of bonded joints.
2. Conduct continuity test on buried joints that are required to be bonded. Test electrical continuity of joint bonds after bonds are installed but before backfilling of pipe.
3. Have Cathodic Protection Specialist monitor tests of bonded joints.
4. Test electrical continuity of completed joint bonds using either a digital low resistance ohmmeter or by Calculated Resistance Method.
5. Digital Low Resistance Ohmmeter Method:
   a. Provide the following equipment and materials:
      1) One Biddle Model 247001 digital low resistance ohmmeter.
      2) One set of duplex helical current and potential hand spikes, Biddle Model No. 241001, cable length as required.
      3) One calibration shunt rated at 0.001 ohms, 100 amperes, Biddle Model No. 249004.
   b. Test Procedure: Measure resistance of joint bonds with low resistance ohmmeter in accordance with manufacturer's written instructions. Use helical hand spikes to contact pipe on each side of joint, without touching thermite weld or bond. Clean contact area to bright metal by filing or grinding and without surface rusting or oxidation. Record measured joint bond resistance on test form described herein. Repair damaged pipe coating.
6. Calculated Resistance Method:
   a. Provide the following equipment and materials:
      1) One dc ammeter (meter or clamp-on) with full scale reading of 100 amperes and a minimum resolution of 1 ampere or a 100-ampere shunt with a voltmeter as specified herein.
      2) One high resistance electronic voltmeter with a dc low range of 200 millivolts full scale to a dc high range of 20 volts full scale and capable of a minimum resolution of 1 millivolt (two voltmeters are required if a shunt is used).
      3) One knife switch, safety switch, or time controlled relay suitable for test current.
      4) Two electrical probes for the voltmeter.
      5) Insulated wire suitable for carrying the test current, length as required.
      6) One dc power supply with a steady capacity of 50 amperes minimum; storage batteries are not an acceptable power supply.
   b. Test Procedure: Either tightly clamp or thermite weld current wire connections to the pipe. Determine wire size for the test current, and do not exceed 1,000 feet in length.
   c. Apply a minimum direct current of 50 amperes.

d. Measure voltage drop across each joint with voltmeter by contacting pipe on each side of joint. Voltmeter connections to bond wire or thermite welds will not be acceptable.
e. Measure current applied to test span and voltage drop across joint simultaneously.
f. Record measured voltage drop and current for each joint of test form described herein and calculate bond resistance in accordance with the following formula:

$$R = \frac{E}{I}$$

Where:
R = Resistance of the joint bond.
E = Measured voltage drop across the joint, in volts.
I = Test current applied to the pipe test span, in amperes.

7. Joint Bond Acceptance:
a. Joint Bond Resistance: Less than or equal to the maximum allowable bond resistance values in Table 1.

Table 1

Joint Type	Max. Allowable Resistance	
	1 Bond/Joint	**2 Bonds/Joint**
Push-On or Mechanical	0.000325 ohm	0.000162 ohm
Flexible Coupling	0.000425 ohm	0.000212 ohm

b. Replace joint bonds that exceed the allowable resistance. Retest replacement joint bonds for compliance with bond resistance.
c. Repair defective joint bonds discovered during energizing and testing.

8. Record Tests of Each Bonded Pipeline:
a. Description and location of pipeline tested.
b. Starting location and direction of test.
c. Date of test.
d. Joint type.
e. Test current and voltage drop across each joint and calculated bond resistance (Calculated Resistance Method only).
f. Measured joint bond resistance (Digital Low Resistance Ohmmeter method only).

D. Insulated Joint Testing: Test each joint after assembly with the insulator tester in accordance with the manufacturer's written instructions. Monitor tests by Cathodic Protection Specialist. Replace damaged or defective insulation parts.

1. Correct defects identified during testing.
2. Provide CONSTRUCTION MANAGER with 3 days' advance notice before beginning tests.

3.11 FUNCTIONAL TESTING

A. Measure structure-to-soil potential of pipeline at each test station using equipment specified herein. Make structure-to-soil potential measurements at surface with a portable copper-copper sulfate reference electrode and the permanent reference electrode installed at each test station.

B. Tabulate structure-to-soil potential measurements, with the date and test location, and submit to CONSTRUCTION MANAGER.

3.12 SUPPLEMENT

A. The supplement listed below, following "End of Section," is a part of this Specification.

1. Joint Bond Continuity Test Schematic.

END OF SECTION

SUPPLEMENT

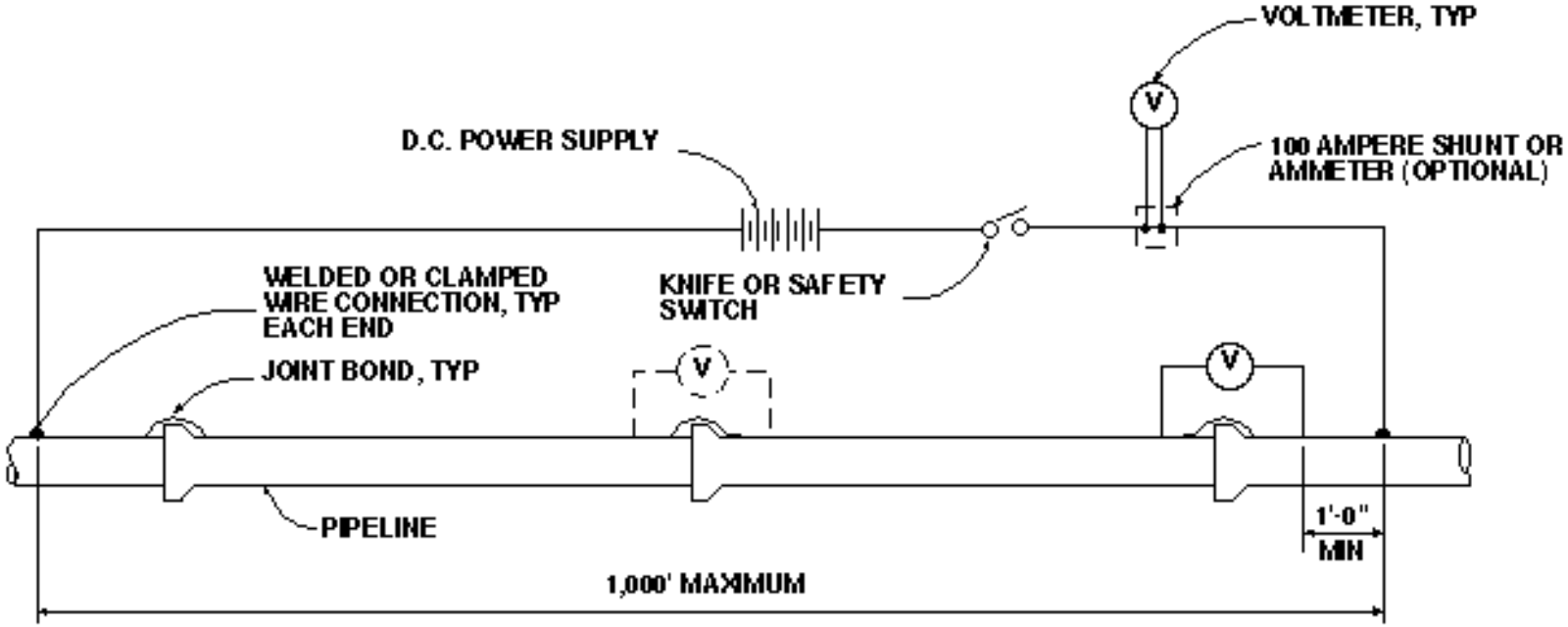

JOINT BOND CONTINUITY TEST SCHEMATIC

DTE195.SP 1004-17-95/mbb

SECTION 26 42 02
GALVANIC ANODE CATHODIC PROTECTION SYSTEM

PART 1 GENERAL

1.01 REFERENCES

A. The following is a list of standards that may be referenced in this section:

1. ASTM International (ASTM):
   a. B843, Standard Specification for Magnesium Alloy Anodes for Cathodic Protection
   b. G97, Standard Test Method for Laboratory Evaluation of Magnesium Sacrificial Anode Test Specimens for Underground Applications.
2. National Fire Protection Association (NFPA): 70, National Electrical Code (NEC).

1.02 DEFINITIONS

A. Lead, Lead Wires, Joint Bonds, Cable: Insulated copper conductor; the same as wire.

1.03 SUBMITTALS

A. Action Submittals: Catalog cuts and other information for products to be used.

B. Informational Submittals:

1. Compliance Statement: Provide compliance statement that galvanic anode composition meets chemical requirements specified herein.
2. Test data for open circuit potential measurements and electrochemical capacity for high potential magnesium anodes, as specified herein.
3. Field test reports.
4. Cathodic Protection Specialist and Technician qualifications.

1.04 QUALITY ASSURANCE

A. UTILITIES' Cathodic Protection Technician or Higher Qualification for Field Inspection: As specified in Section 26 42 01, Pipe Bonding and Test Stations.

B. Cathodic Protection Technician Installation and Testing: As specified in Section 26 42 01, Pipe Bonding and Test Stations.

1.05 DELIVERY, STORAGE, AND HANDLING

A. Packing and Shipping: Provide electrode packaged in a plastic or heavy paper bag of sufficient thickness to protect electrode, backfill, and cloth bag during normal shipping and handling.

B. Store prepackaged anodes off the ground and keep them dry. Protect against weather, condensation, and mechanical damage. Immediately remove wet or mechanically damaged prepackaged anodes from Site. Handle anodes with care to prevent loss of backfill material. Do not lift or hold anodes by lead wire.

PART 2 PRODUCTS

2.01 GALVANIC ANODES

A. Magnesium Anodes:

1. Composition: High potential magnesium, ASTM B843, Grade M1C.
2. Open Circuit Potential and Electrochemical Capacity:
   a. Open Circuit Potential: Negative 1.70 volts or more negative to a copper-copper sulfate reference electrode.
   b. Electrochemical Capacity: 490 ampere hours at 50 percent efficiency, minimum.
   c. As determined by laboratory testing using ASTM G97.
3. Dimensions:
   a. Bare Weight: 48 pounds minimum.

B. Anode Wire: Furnish each anode with No. 12 AWG solid copper wire with HMWPE insulation, length as required to allow wire connections to be made at joints.

C. Wire-to-Anode Connection: Manufacturer's standard. Make anode connection stronger than the wire.

D. Backfill:

1. Composition:
   a. Ground Hydrated Gypsum: 75 percent.
   b. Powdered Wyoming Bentonite: 20 percent.
   c. Anhydrous Sodium Sulfate: 5 percent.
2. Grain Size: 100 percent passing through a 20-mesh screen and 50 percent retained by a 100-mesh screen.
3. Mixture: Thoroughly mixed and firmly packaged around galvanic anode within cloth bag by means of adequate vibration.
4. Install quantity of backfill sufficient to cover surfaces of anode to a depth of 1 inch.

2.02 CATHODIC PROTECTION TEST STATION

A. As specified in Section 26 42 01, Pipe Bonding and Test Stations.

2.03 ANCILLARY MATERIALS

A. Compression Connectors:

1. For in-line, tap, and multisplice compression connectors furnish "C" taps made of conductive wrought copper, sized to fit wires being spliced.
2. Manufacturer and Product: Burndy; Type YC.

B. Wire Connectors: One-piece, tin-plated crimp-on lug connector as manufactured by Burndy Co. or Thomas and Betts.

C. Splicing Tape: Linerless rubber high-voltage splicing tape suitable for moist and wet environments; Scotch 130C and Scotch 88, as manufactured by 3M Products.

D. Earthfill: Native soil free of roots and other organic matter, ashes, cinders, trash, debris, and rocks.

2.04 THERMITE WELD MATERIALS

A. As specified in Section 26 42 01, Pipe Bonding and Test Stations.

PART 3 EXECUTION

3.01 GENERAL

A. Construct galvanic anode cathodic protection system on buried welded steel pipe and appurtenances.

B. Construct galvanic anode cathodic protection system on buried ductile iron pipe in accordance with Colorado Springs Utilities standards.

C. Conform to NFPA 70.

3.02 GALVANIC ANODE INSTALLATION

A. General:

1. Install galvanic anodes as shown on Drawings.
2. Provide minimum anode spacing of 2 feet from other unprotected pipelines.
3. Install two anodes at pipe joints at intervals not exceeding 50 feet along the pipeline. Install one anode on each side of pipe. Make wire

connections at pipe joints. Short sections of pipe may not require an anode at a pipe joint if the distance between adjacent pipe joints and anodes does not exceed 50 feet.

4. Thoroughly compact earthfill around each anode to a point 1 foot above anode. Stop backfill below grade to allow for placing of topsoil, when required.
5. Bury anode wires a minimum of 36 inches below finish grade.

3.03 WIRE CONNECTIONS TO PIPE

A. As specified in Section 26 42 01, Pipe Bonding and Test Stations.

3.04 WIRE INSULATION REPAIR

A. Repair splices or damage to wire insulation by spirally wrapping (50 percent overlay, minimum) with two coats of splicing tape and two layers of vinyl electrical tape. Make wire splices with suitable sized compression connectors or mechanically secure and solder with rosin cored 50/50 solder.

3.05 TEST STATION INSTALLATION

A. As specified in Section 26 42 01, Pipe Bonding and Test Stations.

3.06 FIELD TESTING

A. As specified in Section 26 42 01, Pipe Bonding and Test Stations, and Section 26 42 00, Pipeline Grounding System.

END OF SECTION

SECTION 31 10 00
SITE CLEARING

PART 1 GENERAL

1.01 DEFINITIONS

A. Interfering or Objectionable Material: Trash, rubbish, and junk; vegetation and other organic matter, whether alive, dead, or decaying; topsoil.

B. Clearing: Removal of interfering or objectionable material lying on or protruding above ground surface.

C. Grubbing: Removal of vegetation and other organic matter including stumps, buried logs, and roots greater than 2 inches caliper to a depth of 6 inches below subgrade.

D. Scalping: Removal of sod without removing more than upper 3 inches of soil.

E. Stripping: Removal of topsoil remaining after applicable clearing and grubbing is completed.

F. Topsoil:

1. Topsoil Within Vegetated Stream Channels: The top 12 inches of native soil.
2. Topsoil in Open Country Areas: The top 6 inches of native soil.

G. Work Limits: Areas, as shown on Drawings, within which Work is to be performed.

1.02 SUBMITTALS

A. Action Submittals: Drawings clearly showing clearing, grubbing, and stripping limits.

1.03 QUALITY ASSURANCE

A. Obtain CONSTRUCTION MANAGER's approval of staked clearing, grubbing, and stripping limits, prior to commencing clearing, grubbing, and stripping.

1.04 SCHEDULING AND SEQUENCING

A. Conduct Site clearing only after Work Limits, fencing, and erosion and sediment controls are in place. Comply with federal, state and local permits.

PART 2 PRODUCTS (NOT USED)

PART 3 EXECUTION

3.01 GENERAL

A. Clear, grub, and strip areas actually needed for waste disposal, borrow, or Site improvements within Work Limits shown or specified.

B. Do not injure or deface vegetation that is not designated for removal. Vegetation not designated for removal within the Work Limits will be identified in the Drawings and will require installation of construction fence around the perimeter of the vegetation.

C. Clear, grub, and strip areas indentified with noxious weeds in accordance with Section 01 57 17, Temporary Weed Control.

3.02 LIMITS

A. Within the Work Limits, limit disturbance of existing vegetation to the minimum area that is required to safely and adequately perform the Work. Do not disturb vegetation outside the Work Limits.

B. As follows, but not to extend beyond Work Limits.

1. Clearing: Clear areas to be disturbed by operations.
2. Grubbing:
   a. Trench Excavations:
      1) When stockpiling excavated materials adjacent to trench, grub 5 feet beyond the limit of stockpiles.
      2) When excavated materials are removed without stockpiling adjacent to the trench, grub 5 feet beyond top of cut slope.
   b. Structure Excavations: Grub 15 feet beyond structure excavations, including excavated stockpiles.
   c. Material Stockpiles: Grub 5 feet beyond areas used to stockpile imported material.
   d. Miscellaneous: Grub areas used for access to the Site.
   e. Grub entire area within the permanent easement as defined on the Drawings.
3. Stripping:
   a. Trench Excavation: 2 feet beyond cut slopes of trenches.
   b. Structures: 2 feet beyond excavations.
   c. Wherever grading is required, including access ramps and travel construction entrances.
4. Excavation: 5 feet beyond top of cut slopes.
5. Areas to Receive Fill:
   a. Clearing and Grubbing: 5 feet beyond toe of permanent fill.
   b. Stripping: 2 feet beyond toe of permanent fill.

6. Waste Disposal:
    a. Clearing: 5 feet beyond perimeter.
    b. Grubbing: Around perimeter as necessary for neat finished appearance.
    c. Scalping and Stripping: Not required.
7. Structures: As shown.
8. Imported fill and embankment material to be received only through Site access roads as shown in the Drawings

C. Remove rubbish, trash, and junk from entire area within Work Limits.

3.03 TEMPORARY REMOVAL OF INTERFERING PLANTINGS

A. Remove and store plants, shrubs and trees that are not designated for removal but do interfere with construction or could be damaged by construction activities and as directed or approved by CONSTRUCTION MANAGER.

B. Photograph and document location, orientation, and condition of each plant prior to its removal. Record sufficient information to uniquely identify each plant removed and to assure accurate replacement.

3.04 CLEARING

A. Clear areas within Work Limits as specified.

B. Fell trees so that they fall away from facilities and vegetation not designated for removal.

C. Cut stumps not designated for grubbing flush with ground surface.

D. Cut off shrubs, brush, weeds, and grassed to within 2 inches of ground surface.

3.05 GRUBBING

A. Grub areas within Work Limits as specified.

3.06 SCALPING

A. Do not remove sod until after clearing and grubbing is completed and resulting debris is removed.

B. Scalp areas within Work Limits shown or specified.

3.07 STRIPPING

A. Do not remove topsoil until after clearing, grubbing, and scalping is completed. Remove woody vegetation prior to topsoil salvage and, to the extent possible, salvage topsoil within tree stump roots.

B. For areas within vegetated stream channels, strip areas within Work Limits as specified. Do not remove subsoil with topsoil. For open country areas, strip areas within Work Limits as specified.

C. Stockpile strippings for topsoil separately from other excavated material with approval from CONSTRUCTION MANAGER.

D. Protect stockpile with plastic sheeting, tackifier, or as directed by CONSTRUCTION MANAGER.

E. Restore topsoil within areas of disturbance to preconstruction conditions.

F. Use topsoil salvage methods including windrowing topsoil at the limits of construction and pulling the soil back on slopes during reclamation.

3.08 DISPOSAL

A. Clearing and Grubbing Debris:

1. Dispose of debris offsite.
2. Burning of debris, waste material, or rubbish on or adjacent to the Site will not be allowed.
3. Woody debris may be chipped. Chips may be sold for CONTRACTOR's benefit or used for landscaping onsite as mulch or uniformly mixed with topsoil, provided that resulting mix will be fertile and not support combustion. For chipped material used onsite, use 1/4-inch by 2 inches maximum dimensions. Dispose of chips that are unsaleable or unsuitable for landscaping or other uses with unchipped debris.
4. Limit offsite disposal of clearing and grubbing debris to locations that are approved by federal, state, and local authorities, and that will not be visible from the Site

B. Scalpings: As specified for clearing and grubbing debris.

C. Strippings:

1. Dispose of strippings that are unsuitable for topsoil or stream restoration material that exceed quantity required offsite.
2. Stockpile topsoil or stream restoration material in sufficient quantity, as required. Dispose of excess strippings as specified for clearing and grubbing.

END OF SECTION

SECTION 31 23 13
SUBGRADE PREPARATION

PART 1 GENERAL

1.01 WORK INCLUDED

A. This section covers subgrade preparation for placement of earthfill materials and construction of foundations, floor slabs, and pavement sections. Subgrade preparation for backfill of pipe trenches is covered in Section 31 23 23.15, Trench Backfill.

1.02 REFERENCES

A. The following is a list of standards which may be referenced in this section:

1. ASTM International (ASTM): D1557, Test Method for Laboratory Compaction Characteristics of Soil Using Modified Effort (56,000 ft-lbf/ft^3 (2,700 kN-m/m^3)).

1.03 DEFINITIONS

A. Optimum Moisture Content: As defined in Section 31 23 23.15, Trench Backfill.

B. Prepared Ground Surface: Ground surface after completion of clearing and grubbing, scalping of sod, stripping of topsoil, excavation to grade, and scarification and compaction of subgrade.

C. Relative Compaction: As defined in Section 31 23 23.15, Trench Backfill.

D. Relative Density: As defined in Section 31 23 23.15, Trench Backfill.

E. Subgrade: Layer of existing soil after completion of clearing, grubbing, and scalping of topsoil prior to placement of fill, roadway structure, or base for floor slab. Subgrade may also include backfill materials required for paving.

F. Unsuitable Material: As defined in Section 31 23 23.15, Trench Backfill.

1.04 SEQUENCING AND SCHEDULING

A. Complete applicable Work specified in Sections 31 10 00, Site Clearing; 31 23 16.13, Excavation; and 31 23 19.01, Dewatering, prior to subgrade preparation.

1.05 QUALITY ASSURANCE

A. Notify CONSTRUCTION MANAGER when subgrade is ready for compaction or proof-rolling or whenever compaction or proof-rolling is resumed after a period of extended inactivity.

PART 2 PRODUCTS (NOT USED)

PART 3 EXECUTION

3.01 GENERAL

A. Keep subgrade free of water, debris, and foreign matter during compaction or proof-rolling.

B. Bring subgrade to proper grade and cross-section and uniformly compact surface.

C. Do not use sections of prepared ground surface as haul roads. Protect prepared subgrade from traffic.

D. Maintain prepared ground surface in finished condition until next course is placed.

3.02 COMPACTION

A. Under Earthfill: Compact upper 6 inches to minimum of 90 percent relative compaction as determined in accordance with ASTM D1557.

B. Under Pavement Structure, Floor Slabs On Grade, or Granular Fill Under Structures: Compact the upper 6 inches to minimum of 95 percent relative compaction as determined in accordance with ASTM D1557.

3.03 MOISTURE CONDITIONING

A. Dry Subgrade: Add water, then mix to make moisture content uniform throughout.

B. Wet Subgrade: Aerate material by blading, discing, harrowing, or other methods, to hasten drying process.

3.04 CORRECTION

A. Soft or Loose Subgrade:

1. Adjust moisture content and recompact, or
2. Overexcavate and replace with suitable material from the excavation, as specified in Section 31 23 23.15, Trench Backfill.

B. Unsuitable Material: Overexcavate and replace with suitable material from the excavation, as specified in Section 31 23 23.15, Trench Backfill.

END OF SECTION

SECTION 31 23 16.13
EXCAVATION

PART 1 GENERAL

1.01 DEFINITIONS

A. Common Excavation: Removal of material not classified as Rock Excavation.

B. Rock Excavation:

1. Removal of solid material that by actual demonstration, in the CONSTRUCTION MANAGER's opinion, cannot be reasonably loosened or ripped by either a single-tooth, hydraulically operated ripper mounted on a crawler tractor in good condition rated at a minimum 300 flywheel horsepower or excavated with a minimum 325 flywheel horsepower hydraulic excavator in good condition equipped with manufacturer's standard boom, two rippers and rock points, or similar approved equipment.
2. Term "rock excavation" indicates removal of solid material, as specified above, and does not necessarily correspond to "rock" as implied by names of geologic formations. Material that for convenience or economy is loosened by drilling, blasting, or the use of pneumatic tools, is not considered rock excavation.
3. Removal of boulders larger than 1/2 cubic yard will be classified as rock excavation, if drilling and blasting or breaking them apart with power operated hammer, hydraulic rock breaker, expansive compounds, or other similar means is both necessary and actually used for their removal.

C. Influence Area: Area within planes sloped downward and outward at 60-degree angle from horizontal measured from:

1. 1 foot outside outermost edge at base of foundation or slabs.
2. 1 foot outside outermost edge at surface of roadways or shoulder.
3. 0.5-foot outside exterior at spring line of pipes or culverts.

D. Unsuitable Material: Excavated material that is unsuitable for use as backfill material as specified in Section 31 23 23.15, Trench Backfill.

1.02 SUBMITTALS

A. Informational Submittals:

1. Shop Drawings:
   a. Excavation and Disposal Plan, Detailing:
      1) Methods and sequencing of excavation.
      2) Proposed locations of stockpiled excavated material.
      3) Proposed onsite and offsite spoil disposal sites.
      4) Numbers, types, and sizes of equipment proposed to perform excavations.
      5) Anticipated difficulties and proposed resolutions.
      6) Reclamation of onsite spoil disposal areas.
2. Required excavation permits from the Pueblo County Public Works Department for each road crossing.
3. Required excavation permits from Pueblo West Metropolitan District for excavation on Pueblo West Metropolitan District property, excluding road right-of-way.

1.03 QUALITY ASSURANCE

A. Provide adequate survey control to avoid unauthorized overexcavation.

1.04 WEATHER LIMITATIONS

A. Do not use material excavated when frozen or when air temperature is less than 32 degrees F as fill or backfill until material completely thaws.

B. Do not use material excavated during inclement weather as fill or backfill until after material drains and dries sufficiently for proper compaction.

1.05 SEQUENCING AND SCHEDULING

A. Demolition: Complete applicable Work specified in Section 02 41 00, Demolition of Structures, Removal of Asbestos Cement Pipe, and Demolition and Installation of Septic Systems, prior to excavating.

B. Clearing, Grubbing, and Stripping: Complete applicable Work specified in Section 31 10 00, Site Clearing, prior to excavating.

C. Dewatering: Conform to applicable requirements of Section 31 23 19.01, Dewatering, prior to initiating excavation.

D. Excavation Support: Conform to applicable requirements of Section 31 41 00, Shoring. Install and maintain, in accordance with OSHA requirements, as necessary to support sides of excavations and prevent detrimental settlement and lateral movement of existing facilities, adjacent property, and completed Work.

PART 2 PRODUCTS (NOT USED)

PART 3 EXECUTION

3.01 GENERAL

A. Compliance to applicable excavation permits.

B. Prior to excavating, install erosion and sediment control measures as specified with required permits.

C. Excavations are subject to flooding by stormwater. Provide or construct temporary diversionary facilities to mitigate flooding of the excavation and damage to the contents within.

D. Excavate to lines, grades, and dimensions shown and as necessary to accomplish Work. Excavate to within tolerance of plus or minus 0.1 foot except where dimensions or grades are shown or specified as maximum or minimum. Allow for forms, working space, granular base, topsoil, and similar items, wherever applicable. Trim to neat lines where concrete is to be deposited against earth. Furnish, place, and maintain supports and shoring that may be required for the sides of the excavations.

E. If explosives are used, conform to requirements of Section 31 23 16.27, Blasting Controls.

F. Use of Excess Excavated Materials: Use of excess excavated materials to complete fills or produce granular rock products required for the Work is permitted.

1. Process excavated materials to meet specified material requirements.
2. In the event that excavated materials or processed materials do not meet the specified material requirements, import the specified material.
3. Only use excavated materials from excavations actually required for the Work for generating fills or other granular rock products required for the Work. No borrow excavations intended solely to generate materials for processing are allowed.

G. Remove excess overburden materials. Remove materials that are outside the limits of initial excavation but which present unsafe conditions.

H. Removal and Exclusion of Water: In addition to the requirements of Section 31 23 19.01, Dewatering, remove and exclude water from open excavations, including stormwater, groundwater, irrigation water and wastewater. Use dewatering wells, well points, sump pumps, or other means to remove water and continuously maintain groundwater at a level at least 2 feet below the lowest point of excavations before the excavation work begins at each location. Remove and exclude water until backfilling is

complete and field soils testing has been completed, or as approved by CONSTRUCTION MANAGER. Excavate and replace any subgrade soil or embankment that is loosened or damaged by water as directed by CONSTRUCTION MANAGER.

I. Do not overexcavate outside of the specified limits without written authorization of CONSTRUCTION MANAGER.

J. Remove or protect obstructions as shown and as specified in Section 01 14 19, Use of Site.

3.02 ROCK EXCAVATION

A. Rock is anticipated to be encountered in the excavations as identified in the table below.

DEFINED LIMITS OF ROCK TO BE ENCOUNTERED IN EXCAVATIONS		
Begin Station	**End Station**	**Top of Rock (Measured From Invert of Pipe)**
S 127+08	S 156+00	15 ft above
S 156+00	S 162+00	10 ft above
S 162+00	S 174+00	16 ft above
S 174+00	S 182+00	12 ft above
S 198+00	S 236+00	8 ft above
S 236+00	S 253+00	6 ft above
S 253+00	S 258+00	15 ft above
S 258+00	S 290+00	7 ft above
S 294+00	S 306+72	4 ft above

B. When apparent rock is encountered in the excavation, regardless of whether it is within the limits identified in the above table, comply with the following requirements:

1. Remove overlying material and expose rock surface for examination by CONSTRUCTION MANAGER.
2. Demonstrate that removal of remaining material classifies as rock excavation as defined in Paragraph 1.01.B, Rock Excavation.
3. Provide field survey to show where rock is encountered.
4. Assist CONSTRUCTION MANAGER with measurement and documentation of rock excavation.

3.03 STRUCTURE, EMBANKMENT, AND CUT SLOPES EXCAVATION

A. Foundation Preparation Beneath Roadway Embankments: Except where otherwise ordered by CONSTRUCTION MANAGER, clear, grub, and strip areas beneath roadway embankments in accordance with Section 31 10 00, Site Clearing. After clearing is completed, scarify entire areas that underlie fill sections to a depth of 6 inches and until surface is free of ruts, hummocks, and other features which would prevent uniform compaction by equipment to be used. Recompact areas to specified density before placing of fill material. Where cemented rock, cobbles, or boulders compose a large portion of foundation material underlying structures, it may not be advisable to scarify the top 6 inches prior to compaction. If CONSTRUCTION MANAGER deems it advisable not to scarify existing natural ground, then moisten the native soil and compact it as indicated.

B. Surveying of Excavation Slopes: Place survey stakes or other identification at vertical intervals of 5 feet from the top of the excavation to the bottom of cut slope. Set stakes at 50-foot maximum intervals around the excavation perimeter. Stakes shall indicate the deviation from the grade indicated on the Drawings. Maintain the specified cut slope at points along the slope.

C. Excavated Materials: Place excavated material within Work Limits at designated locations identified by the CONSTRUCTION MANAGER and as further specified in Article 3.06, Stockpiling Excavated Material. Separate materials that are usable as backfill or fill from unsuitable material and as further specified in Article 3.01, General.

D. Notification: Notify CONSTRUCTION MANAGER at least 3 working days in advance of placing any embankment on prepared subgrade or as backfill in an excavation and allow CONSTRUCTION MANAGER a review period of at least 1 day before the exposed foundation is scarified and compacted or is covered with backfill or with any other materials.

E. Shape, trim, and finish cut slopes to conform with lines, grades, and cross-sections shown, with proper allowance for topsoil or slope protection, where shown.

F. Remove stones and rock that exceed 3-inch diameter and that are loose and may roll down slope. Remove exposed roots from cut slopes.

G. Finished Grading Surfaces: Round the tops of excavation slopes to a 6-foot minimum radius curve and remove loose or unstable material from the slopes. Provide degree of finish that is ordinarily obtainable from blade grader or dozer with side angle blade operations. Finish gutters and ditches so that they drain readily. Repair or re-establish grades to required elevations and slopes due to any settlement or washing away that may occur from action of the elements or any other cause prior to final acceptance. Blend new cut and fill slopes into existing surface so as to provide a smooth appearance.

3.04 PIPE AND UTILITY TRENCH EXCAVATION

A. General: Unless otherwise indicated or ordered, open-cut trenches with widths as indicated for excavation for pipelines and utilities.

B. Open Trench Length: Limit the maximum length of open trench to 400 linear feet at each heading at the completion of each work day.

C. Trench Bottom: Uniformly excavate and smooth the bottom of the trench to the grade of the bottom of the pipe bedding. Remove loose or disturbed material from the bottom of the trench, including excavator ridges.

D. Trench at Bell Holes and Butt Joints: For exterior welded joints in accordance with Section 33 05 01.02, Welded Steel Pipe and Fittings—Weld Before Backfill, excavate as needed to provide a minimum of 2 feet clear between outside surface of pipe at springline and side wall of trench. Provide this clearance on both sides of the pipe. Excavate bottom of trench to provide a minimum of 1 foot 6 inches clear between bottom of pipe exterior and bottom of trench. Extend these clearances around pipe for at least 2 feet on each side of the center of the joint. These dimensions are minimum required for access by CONSTRUCTION MANAGER for observation of the Work, and may be increased as needed for construction purposes.

E. Overexcavation: Overexcavate where required by CONSTRUCTION MANAGER. Backfill any excavation below the grade not ordered or indicated with the indicated material and compaction specified in Section 31 23 23.15, Trench Backfill.

F. Trench Overexcavation: Where trenches are indicated to be overexcavated, excavate to the depth indicated, and install backfill to the grade of the bottom of the pipe bedding.

G. Where pipelines are to be installed in embankments, fills, or structure backfills, construct the fill to a level at least 2 feet above the top of the pipe before the trench is excavated.

H. If a moveable trench shield is used during excavation operations, construct the trench width wider than the shield so that the shield is free to be lifted and then moved horizontally without binding against the trench sidewalls. Remove the trench shield and stabilize the trench if the trench walls cave in or slough.

3.05 TRENCH WIDTH

A. As shown on the Drawings.

B. Increase trench widths by thicknesses of sheeting or trench shield.

C. Maximum Trench Width: Unlimited, unless otherwise shown or specified, or unless excess width will exceed Work Limits, cause damage to existing facilities, adjacent property, or completed Work.

3.06 STOCKPILING EXCAVATED MATERIAL

A. Stockpile excavated material that is suitable for use as fill or backfill until material is needed.

B. Post signs indicating proposed use of material stockpiled. Post signs that are readable from every direction of approach to each stockpile. Signs should be clearly worded and readable by equipment operators from their normal seated position.

C. Confine stockpiles to within approved Work Limits. Do not obstruct roads or streets.

D. Do not stockpile excavated material adjacent to trenches and other excavations unless excavation sideslopes and excavation support systems are designed, constructed, and maintained for stockpile loads.

E. Do not stockpile excavated materials near or over existing facilities, adjacent property, or completed Work, if weight of stockpiled material could induce excessive settlement.

F. Stockpile excavated material on the downhill side of the excavation where practicable.

3.07 DISPOSAL OF SPOIL

A. Dispose of excavated materials that are unsuitable or exceed quantity needed for fill or backfill at an offsite disposal facility.

B. Dispose of debris resulting from removal of organic matter, trash, refuse, and junk as specified in Section 31 10 00, Site Clearing.

C. Dispose of debris resulting from removal of underground facilities as specified in Section 02 41 00, Demolition of Structures, Removal of Asbestos Cement Pipe, and Demolition and Installation of Septic Systems.

END OF SECTION

SECTION 31 23 16.27
BLASTING CONTROLS

PART 1 GENERAL

1.01 DEFINITIONS

A. Controlled Blasting: Techniques used to control overbreak, to limit the effects of blasting to within the final lines and grades of an excavation, and produce a competent final excavation wall. Line drilling, presplitting, cushion blasting, and smooth blasting are controlled blasting techniques used in connection with structure and trench excavation.

B. Line Drilling: A controlled blasting technique where a series of very closely spaced holes is drilled at the perimeter of the excavation to provide a plane of weakness that the final row of blast holes can break. These holes are not loaded with explosives.

C. Cushion Blasting: Cushion blasting is a blasting technique that the line of holes along the boundary of the excavation is detonated during the last delay period of the blast. The main burden is moved from the face by the main production holes, leaving only a small burden to be removed by the line holes on the perimeter. The holes along the perimeter are loaded lighter than the main production holes.

D. Presplitting: A controlled blasting technique that creates a continuous or semi-continuous fracture between blast holes at the rock slope or perimeter of a tunnel or shaft. This is accomplished by loading each presplit hole with explosives and detonating such charges prior to drilling and blasting the main production blast holes. Detonate charges in any line of holes loaded for presplitting from one end with primacord downlines.

E. Smooth Blasting: A controlled blasting technique for underground excavations that controls breakage of rock to the drilled tunnel perimeter. Holes are drilled around the perimeter of the tunnel and spaced more closely than the interior blast holes. These perimeter holes are also loaded more lightly than the interior production holes and are fired last in the blast sequencing of the round.

F. Test Blasts: The drilling, blasting and excavation of test sections to verify the proposed hole spacing, hole depths, explosive quantities, and delay times, prior to commencing full-scale blasting operations. Use in conjunction with sealed distance calculations to quantify or confirm blasting results.

G. Air Blast: A transient air pressure impulse generated by explosions.

H. Blaster in Charge: Person authorized to act on behalf of CONTRACTOR and licensed by the Federal, State or local regulatory agency to possess, transport, and use explosives.

I. Peak Particle Velocity: Maximum of three velocity components measured in three mutually perpendicular directions at a point.

J. Fly Rock: Debris that is ejected or propelled through air by blast.

K. Frequency: Ground vibration oscillation at peak event, expressed in Hertz.

1.02 SUBMITTALS

A. Informational Submittals:

1. Submit Blasting Safety Plan, Master Blasting Plan, and Blasting Monitoring Plan concurrently, but as separate submittals, a minimum of 45 days prior to the commencement of work involving explosives, including drilling.
2. Blasting Safety Plan:
   a. The Blasting Safety Plan requires review and acceptance by the Bureau of Reclamation.
   b. Meet state and federal requirements.
   c. Address the storage, handling, and use of explosives along with the notification requirements for local agencies, CONTRACTOR's personnel, and the CONSTRUCTION MANAGER.
   d. Include the following:
      1) A list of authorities having jurisdiction over operations involving the transportation, storage, handling and use of explosives.
      2) A printed copy of applicable federal, state and local regulations governing the use and storage of explosives for this work.
      3) Copies of required blasting permits regarding explosive use and storage.
      4) Copies of Colorado Blasting Licenses, including proper initiation system and construction blasting endorsements, for Blaster in Charge and other blasters overseeing blasting operations.
      5) A description of the clearing and guarding procedures that will be employed to ensure personnel, staff, visitors, and other persons are at safe locations during blasting. Include details regarding visible warning signs or flags, audible warning signals, method of determining blast areas (areas affected by any potentially harmful blast affects), access blocking methods, guard placement and guard release

procedures, primary initiation method, and the system by which the Blaster in Charge will communicate with site security guards.

6) A description of how explosives will be: 1) kept in day-storage-boxes when on site, and 2) transported and used at the various project work areas. Explain how day-storage magazines and explosive transport vehicles will satisfy applicable ATF, OSHA, federal, OSHA, and Pueblo County regulations. Indicate how explosives will be inventoried, secured, and guarded to prevent theft or unauthorized use.

7) Material Safety Data Sheets (MSDS) and specific details about hazard communication programs for employees.

8) Equipment that will be used to monitor the approach of lightning storms and, in the event of such, evacuation and site security plans.

9) Plan to identify and mitigate potential sources of extraneous currents or radio waves.

10) Contingency plans for handling of misfires caused by cutoffs or other causes.

3. Master Blasting Plan:
   a. General: Address the overall approach to blasting on the Project, including general plans for individual shots (subject to revision in individual shot plans), proposed test shots, and proposed means and methods to ensure vibration limits are not exceeded and nearby structures are not damages (specifically address Pueblo Dam).
   b. Provide examples of forms to be used, including individual shot plans, drill logs, and reports.
4. Qualifications: Submit the name and qualifications as specified in Article 1.03 and with specific experience to the conditions of this Project of the following individuals:
   a. Preblast Condition Survey Engineer.
   b. Blaster in Charge.
   c. Blasting Consultant.
   d. Blast Vibration Monitoring Specialist who will be responsible for establishing the monitoring program and interpretation of the vibration and air overpressure readings.
   e. Trained personnel to operate the vibration monitoring equipment.
   f. Provide a list of at least five projects for each individual, including project details as described in Article Quality Assurance.
5. Individual Shot Plan:
   a. Submit the following information for each structure or trench excavation 72 hours prior to the blast:
      1) Drill logs, and geologic considerations, scaled distance considerations to any structure, and pipeline station.

2) Number, location, elevation, diameter, depth, and inclination of drill holes on a scaled drawing of the excavation; type of explosive, blasting method (deck charge, presplit, etc), location, weight, and diameter of charge in each hole; total amount of explosives in the blast and maximum charge per 8 μsec delay period; delay arrangement showing delay period in each hole; and the method of detonation, including the type of blasting cap, character, and source of firing current and type and length of stemming used.
3) Details for pre-splits or similar, a complete timing diagram, estimate of cubic yards being shot, ground elevation for each shot, location and type of stemming for each hole.
4) Design shot plans based on previous test blast data and prior shot results. Indicate modifications from previous shot plan.
5) For revised shot plans, clearly identify changes proposed to reduce particle velocities, air blast, and potential for damage.

6. Blasting Monitoring Plan:
   a. Develop plan for monitoring operations to verify compliance with the noise, vibration, and G force limitations and provide critical scaled distance data. Provide for the following in the plan:
      1) The type and model of blasting seismographs and pressure sensors proposed for use and required calibrations of components of the equipment.
      2) The number and location (by station and offset) of proposed monitoring stations.
      3) The methods to be used to coordinate blast detonation with recording of the blast; and the steps to be taken if blasting vibrations, air blasts, or G forces equal or exceed the vibration limits.
      4) Examples of the data output and any reductions of the data for each blast.
7. Preblast Structure Survey: Preblast Condition Survey Engineer shall conduct preblast structure survey on structures (buildings, utilities, wells, etc) within area affected by Work that may be damaged by blasting. Include aboveground structures within at least 400 feet of areas to be blasted. Document existing condition of structures prior to blasting including, but not limited to, written records, photographs, and digital video recordings as outlined in Article 3.03, Preblast Structure Survey.
8. Blasting Records:
   a. Submit within 24 hours of blasting, the following blasting records and information for each blast detonated:
      1) Location of the blast in relation to project stationing and elevation.
      2) Date and time of loading and detonation of the blast.

3) Name of person in responsible charge of the loading and firing and blaster permit number.
4) Signature and title of person making recording entries.
5) Details of each blast according to the criteria listed above for the initial blast design.
6) Scaled distance data used.
7) Video, vibration and air over pressure records including the location and distance of the seismograph to the blast and to the nearest structure, and the measured peak particle velocity and air pressure.
8) Comments by the Blaster in Charge regarding any misfires, unusual results, unusual effects and why, technique, geology, etc.
9) Any other records required by State and other Federal or local codes and regulations.

9. Permits: Obtain and submit to the CONSTRUCTION MANAGER a copy of federal, state and local permits for transportation, storage, and use of explosives including individual blast notification and permission forms. Submit to the CONSTRUCTION MANAGER at least 30 days prior to shipping or using explosives.
10. Summary Report: Submit within 30 days of completion of blasting.

1.03 QUALITY ASSURANCE

A. Preblast Structure Survey Engineer: Individual meeting OSHA qualification requirements who is a Professional Engineer registered in the State of Colorado with a minimum of 5 years of experience performing preblast survey work, including performing surveys on residential and commercial properties. Submit in the Master Blasting Plan a list of five projects that the Preblast Condition Survey Engineer had significant involvement including the names of the projects, the project owners, the contractors, brief descriptions of the surveying programs, and contact names and telephone numbers.

B. Blaster in Charge: Individual meeting OSHA qualifications and requirements who will have direct responsibility for executing the blasting plans and who has a minimum of 10 years of experience performing controlled blasting work, including designing and implementing blasts within close proximity to both reinforced concrete and steel pipeline in the type of geology present and/or similar to this project. Submit in the Master Blasting Plan a list of five projects that the Blaster in Charge had significant involvement including the names of the projects, the project owners, the contractors, brief description of the blasting programs, and contact names and telephone numbers.

C. Blast Vibration Monitoring Specialist: Individual meeting OSHA qualifications and requirements who will have direct responsibility for monitoring blasting activities and who is an independent consultant with a minimum of 10 years of experience performing blast vibration and air

pressure monitoring work, including designing and operating monitoring networks. Submit in the Master Blasting Plan a list of five projects that the Blast Vibration Monitoring Specialist had significant involvement including the names of the projects, the project owners, the contractors, brief descriptions of the monitoring programs, and contact names and telephone numbers.

D. Blasting Consultant:

1. Individual who is an expert in the field of drilling and blasting who provides specialized blasting and/or blasting consulting services.
2. Not an employee of the CONTRACTOR, blasting subcontractor, explosives manufacturer, or explosives distributor.
3. Responsibilities of the Blasting Consultant includes recommendations for initial blast designs, supervising establishment of monitoring programs, and initial operation of equipment by the Blast Vibration Monitoring Specialist, reviewing interpretation of records, and recommending revisions of blast designs.
4. Submit in the Master Blasting Plan:
   a. Proof of providing a similar role on at least 15 projects with blasting.
   b. The credentials and experience outlined below:
      1) At least 20 years of experience in construction blasting within 200 feet of protected structures, including concrete and earthen dams and concrete and steel pipelines, in the type of geology present and/or similar to this Project.
      2) Attended at least 15 short courses, seminars, conferences on blasting technology, or university engineering class studies on blast design during the past 20 years.

E. Other Blasting Personnel:

1. Persons working with explosives shall have required Federal, State, or local licenses and be trained for the duties they are to perform, including safety and first aid training.
2. Persons working with explosives shall be in good physical condition and be able to understand and give written and verbal orders.

1.04 SEQUENCING AND SCHEDULING

A. Blast, only between the hours of 9:00 am and 5:00 pm Monday through Friday, except holidays.

B. Coordinate blasting schedule and plans with CONSTRUCTION MANAGER not less than 72 hours prior to blasting operations.

C. Notify the local Fire Chief, the Chief of Police, Pueblo West Metropolitan District Public Works Director, and Pueblo County, at least 48 hours prior to

any blasting operations. Notify the Pueblo West Metropolitan District Public Works Director not more than 60, nor less than 30 minutes, prior to any detonation of an explosive. CONSTRUCTION MANAGER will notify the Bureau of Reclamation 48 hours prior to any blasting operations near Bureau of Reclamation facilities.

1.05 PHOTOGRAPHIC AND VIDEO RECORDINGS

A. Provide photos of the pre-condition and post condition of the blast site area per Section 01 32 34, Photographic and Video Recordings.

B. Provide video of the surface during blasting per Section 01 32 34, Photographic and Video Recordings.

PART 2 PRODUCTS

2.01 BLAST MONITORING EQUIPMENT REQUIREMENTS

A. Designed for monitoring blast-induced vibrations and air blast.

B. Capable of recording particle velocity in three mutually perpendicular directions in range from 0 to 6 inches per second.

C. Flat vibration frequency response between 4 and 200 Hz.

D. Capable of recording air-blast overpressure up to 140 decibels.

E. Flat air-blast frequency response between 2 and 500 Hz.

F. Blast monitoring equipment located at Pueblo Dam: Capable of measuring and recording peak ground acceleration in percent of G force down to a minimum of 0.005 g.

G. Transducers: Calibrations of 12 months or less.

H. Seismograph should be able to sample greater than 1,000 samples per second.

I. Bolt or cement transducers of these instruments to bedrock or concrete.

2.02 STEMMING

A. Use of drill cuttings for stemming is not permitted.

B. Stemming shall have the angularity and fragment distribution for the blast hole diameter and in the length of the blast hole needed for the spacing and burden to minimize air blasts and maximize proper fragmentation.

2.03 BLAST INITIATION EQUIPMENT

A. Initiate detonation by non-electric detonator (cap and fuse), electric detonator, shock tube detonator or gas initiated detonator in accordance with the manufacturer's recommendation.

B. Electric Detonators:

1. Before adopting any system of electrical firing, make a survey for extraneous currents and eliminate dangerous currents before holes are loaded.
2. Fire blasts using electric detonators with an electric blasting machine or a properly designed power source.
3. When blasting near radar or radio transmission facilities or near electrical energy sources where testing has shown that RF energy or stray electrical current may present a hazard to electrical blasting, employ an approved non-electrical initiation system.
4. Short circuit (shunted) leg wires until connected into the circuit for firing.

C. Non-electric detonators:

1. Blasts using non-electric detonators shall be fired by a blasting machine or starting device prescribed by the manufacturer.

D. Blasting Machines:

1. Operate, maintain, test, and inspect blasting machines as prescribed by the manufacturer.
2. Test blasting machines prior to use and periodically thereafter as prescribed by the manufacturer.
3. Secure blasting machines and make accessible only to the blaster.
4. Use detonating cord connectors, or sequential blasting machines for delayed blasts; conform to the manufacturer's recommendations.

E. Blasting Switches:

1. Ungrounded UL (or other nationally- recognized testing laboratory) listed, enclosed, externally operated double-pole double-throw switch that, when locked in the open position, will shunt the firing lines.
2. Install a grounded switch between the blasting switch and the power circuit at a distance not less than 15 ft from the blasting switch.
3. Provide a lightning gap of at least 15 ft between the two switches; make the gap connection by cable, plug, and receptacle.
4. When energy for blasting is taken from power circuits, do not exceed 550 volts. Wire according to the manufacturer’s recommendations.

F. Electric Firing Lines: Insulated solid core wires appropriate gage in good condition.

2.04 EXPLOSIVES PRODUCTS

A. As recommended by the Blasting Consultant and agreed to by the Blaster in Charge.

B. The use of black powder is prohibited.

C. Do not use loose, unpackage and/or non water resistant explosives where open voids or fractures and/or wet conditions exist.

D. Do not use materials that are beyond the manufacturer's expiration date.

E. Use blasting caps in a single shot from the same lot number.

PART 3 EXECUTION

3.01 OBJECTIVE

A. The primary objective for blasting rock is to construct excavations where the rock outside of the excavation will be undisturbed, nearby facilities and equipment will be unaffected, and the shape of the excavation will conform to the lines and grades indicated on the Drawings. Conduct operations in such a manner that this objective is achieved.

B. Where blasting is used for excavation, employ the best modern practice of a controlled blasting method. Acceptable controlled perimeter techniques include smooth wall, cushion, pre-splitting, or line drilling blasting.

3.02 AREAS WHERE BLASTING IS PROHIBITED

A. No blasting is allowed within 5 feet of any existing structures including, but not limited to, buried utilities and pipelines, railways, highways, or buildings. Comply with utility company requirements.

B. A variance may be requested from the CONSRTRUCTION MANAGER to allow blasting within prohibited areas.

3.03 PREBLAST STRUCTURE SURVEY

A. Preblast Structure Survey Engineer: Conduct a preblast survey on structures within area affected by Work that may be damaged by blasting. Include aboveground and belowground structures within a minimum of 400 feet of blast location.

B. Pueblo Dam:

1. The Bureau of Reclamation will perform a baseline reading of the inclinometers located within the left embankment of Pueblo Dam prior to initial blasting.
2. The CONSTRUCTION MANAGER will notify the Bureau of Reclamation at least 48 hours prior to blasting.
3. The Bureau of Reclamation will perform an evaluation of inclinometer readings within 1,500 feet of the location of blasting and other existing instrumentation at Pueblo Dam after each blast if the peak ground acceleration recorded at the downstream toe of the left embankment of Pueblo Dam exceeds 0.01g.
4. The Bureau of Reclamation will perform a visual inspection of the left embankment of Pueblo Dam after each blast to look for any indications of potential movement of the embankment.
5. If the Bureau of Reclamation determines that movement of the dam has occurred after blasting, regardless of whether it is known to be blasting induced or not, cease blasting until an evaluation of the dam is completed.
6. Include the instrumentation and structural components of Pueblo Dam closest to the blasting operations in the preblast inspection/survey.

C. Supplement written records with photographs and video recordings in accordance with Section 01 32 34, Photographic and Video Recordings.

D. Purpose of survey is to document existing condition of structures prior to blasting, and is intended to be used to evaluate the effects of the blasting and as evidence in ascertaining whether and to what extent damage may have occurred as result of blasting.

E. Record information for each structure surveyed:

1. Type of structure.
2. Age of structure.
3. Address of structure (if applicable).
4. Location and character of any existing cracks or damage.
5. Evidence of settlement and water damage.
6. Other pertinent information.

F. If existing damage or cracks are found on nearby structures, railways, highways, or buildings, provide the location of the damage and measurements of crack length and width of opening in writing, photograph and video. Distinguish different types of existing cracks in structures – cosmetic and structural as defined below.

1. Cosmetic: Opening of old cracks, and formation of new plaster cracks, dislodging of loose bricks in chimneys, cracked glass, hairline cracks in

masonry, loosened plaster, and other conditions not affecting the overall integrity of the structure.

2. Structural: Serious weakening of the building, large cracks, shifting of foundations or bearing walls, major settlement resulting in distortion or weakening of the structure, and walls out of plumb.

G. Record preblast survey information on forms prepared specifically for preblast surveys.

H. Submit signed and stamped pre-construction surveys including photographs, videos, field notes, written records, and sketches in accordance with Section 01 32 34, Photographic and Video Recordings, at least 30 days prior to start of blasting.

3.04 BLAST DESIGN

A. Design each blast to avoid damage to existing facilities, environment, adjacent property, and completed Work. Consider effects of geology, temperature, blast-induced vibrations and air blast, and fly rock potential in design of each blast.

B. Whenever peak particle velocity or acceleration exceeds limits, change design of subsequent blasts, as necessary to reduce effects to within limits.

C. Whenever air blast exceeds limits, change design of subsequent blasts or provide controls necessary to reduce air blast to within specified limits.

D. Blast designs shall be approved by the Blasting Consultant.

3.05 VIBRATION LIMITS

A. Conduct blasting in such a manner so that vibrations reaching adjacent structures and facilities are within specified limits. Record vibrations using at least six approved seismograph(s) (arranged in two parallel lines of three) for each blasting occurrence. Three seismographs must be placed directly over the FVA pipeline at locations where blasting occurs parallel to FVA pipeline. Provide four vibration monitors for blasting in Lake Pueblo State Park. Place three seismographs along the downstream toe of the left embankment of Pueblo Dam at 500 foot centers with the center seismograph placed at the closest point to the downstream toe from the location of blasting. Place the fourth seismograph at the midpoint between the shot and the seismograph located at the closest point to the downstream toe. Show locations on a sketch in the Blast Monitoring Plan. Record blast vibrations by trained personnel. Provide interpretation of results by the qualified Blast Vibration Monitoring Specialist.

B. If blast results in vibration(s) or accelerations in excess of 80 percent of the vibrations or accelerations permitted herein or causes any damage to any

structure, underground utility or liquid conveyance pipes or lines including, but not limited to, water lines, sewerage lines, force mains, chemical conveyance lines and process lines, regardless of the vibration or other measurements, cease blasting activity until submitting a report to the CONSTRUCTION MANAGER that gives the blast parameter data and includes necessary proposed corrective action for the next shot to ensure that the specified limit will not be exceeded. Do not load the next shot until the Blasting Consultant acknowledges, in writing, that the design change is acceptable. Repair damage to the property.

C. If the blast results exceed 100 percent of ground vibration or acceleration control limit for any single axis of any blast, cease blasting-related activities, including drilling operations, and submit an additional written report to the CONSTRUCTION MANAGER. Give the blast parameter data and include necessary proposed corrective action for the next shot to ensure that the specified limit will not be exceeded. Do not resume drilling activities until the Blasting Consultant acknowledges, in writing, that the design change is acceptable.

D. Monitor vibrations by measuring the Peak Particle Velocity in the vicinity of blasting. Establish the maximum Peak Particle Velocity occurring on, or at, the structure closest to the point of blasting operations and at the FVA pipeline. The established Peak Particle Velocity measured at the closest point of any structure or at the FVA pipeline cannot exceed 0.5 inch per second when the frequency is 40 Hz and 2 inches per second when the frequency is 100 Hz. For frequencies between, use a linear relationship to establish the maximum peak particle velocity. In no case shall the Peak Particle Velocity exceed 1.25 inches per second from 0 to 300 feet from the shot, 1 inch per second from 300 to 5000 feet from the shot, and 0.75 inches per second for greater than 5000 feet from the shot, regardless of the frequency. The CONSTRUCTION MANAGER reserves the right to make additional vibration measurements.

E. Limit Peak Ground Acceleration to 0.025 g at the three monitoring instruments at the downstream toe of the Pueblo Dam.

F. The Blast Vibration Monitoring Specialist responsibilities include establishment of monitoring for the test and production program and initial operation of the equipment; visiting the job at least at weekly intervals or more often if requested by the CONSTRUCTION MANAGER; inspecting the recording program and interpretation of records; checking the operations; and, on a monthly basis, providing the CONSTRUCTION MANAGER with a comprehensive written report of the vibration measuring program and an analysis of the blasting and measurement program.

G. Protect new construction located within 400 feet of blasting.

3.06 AIR-BLAST LIMITS

A. Establish appropriate maximum limit for air blast for each structure or facility that is adjacent to or near blast sites. Base maximum limits on expected sensitivity of each structure or facility to air blast, and federal, state, or local regulatory requirements, but not to exceed 0.015 psi peak overpressure (133 decibels).

3.07 VIBRATION, VIDEO, AND AIR-BLAST MONITORING

A. Monitor and record blast-induced vibrations and air blast using sensors and recording equipment for each blast as specified and as included in the Blast Monitoring Plan.

B. Monitor on, or at, structures or other facilities that are closest to point of blasting. Monitor more distant facilities that are expected to be sensitive to blast-induced vibrations and air blast and as specified.

3.08 SAFEGUARDS

A. Handle, transport, use, control, store, and monitor explosives as prescribed by the most stringent of the rules promulgated by the OSHA Standards, these Specifications, and federal, state, and local codes and ordinances.

B. "Mud capping" or shaped charges for secondary blasting above ground or the water surface are prohibited.

C. Use explosives below the water table classified as having "excellent" water resistance and not susceptible to sympathetic detonation.

D. Do not store quantities of explosives larger than required for 1 day's Work onsite. Remove unused explosives from Site at the end of each day. Maintain an inventory record of daily storage and withdrawal of explosives. Make this record available to the CONSTRUCTION MANAGER and notify the CONSTRUCTION MANAGER of any loss or theft of explosives. Provide such reasonable and adequate protective facilities as are necessary to prevent loss or theft of explosives. Do not store, transport, or keep caps or other explodes or fuses in the same place where explosives are stored, transported, or kept.

E. Unless otherwise specifically permitted by the CONSTRUCTION MANAGER, completely remove overburden soil and loose or decomposed rock along the top of the excavation for a distance of at least 15 feet beyond the end of the production hole drilling limits, or to the end of the excavation, before drilling the production holes. In addition, remove muck created by blasting activities from the front of the face in a timely fashion to permit inspection of the face. The CONSTRUCTION MANAGER will subsequently determine if control was met.

F. Production blasting, as covered herein, refers to the main fragmentation blasting resulting from appropriately spaced production holes, drilled throughout the excavation area, adjacent to any backslopes shaped by controlled blasting. For production blasting, space holes and schedule the delays initiation such that shots break to an open face, except as approved by the CONSTRUCTION MANAGER. Unless otherwise approved by the CONSTRUCTION MANAGER, appropriately reduce the depth of blast holes and amount of explosive per hole as the excavation reached final grade, and/or design lines to preserve the rock immediately beneath and adjacent to the trench or foundation in the best possible condition.

G. Monitor the first blasting operation at each location as a test case. Determine the proper drilling pattern and amount and type of explosive to be subsequently used from the blast monitoring data. Continue collection of blast monitoring data for every blast round. Make changes in drilling patterns, delay sequence, and amount of explosives when records indicate any excess of the established limits.

H. Before the firing of any blast, cover the rock to be blasted with suitable matting or material to prevent the debris from leaving the Work Limits. If blasted rock is permitted to escape the blasting mats, blast-related activities, including drilling operations, will be stopped by the CONSTRUCTION MANAGER. Prepare a report describing why rock was allowed to leave the Work Area, and how such events will be prevented in the future. Submit this report to the CONSTRUCTION MANAGER. Written permission from the CONSTRUCTION MANAGER must be obtained before further blasting-related work proceeds, including drilling. These provisions do not provide relief from responsibility for the safety of personnel, the general public, and damage to structures. After a blast is fired, remove loose and shattered rock or other loose material and make the excavation safe before proceeding with the Work. Conduct this operation immediately after each shot in order to allow the CONSTRUCTION MANAGER to observe the face and determine if control is met. Clean and examine the face for holes containing unexploded powder before drilling of new round. If these necessary conditions are not met, stop controlled blasting operations, including drilling, until waste rock is removed and the face controls can be exerted. Develop and improve blasting techniques as Work progresses. The fact that the removal of loose or shattered rock or other loose material may enlarge the excavation beyond the required limits does not provide relief of responsibility for such removal and subsequent additional backfill.

I. Conform to the provisions of Section 01 14 19, Use of Site, with respect to protection of property and the restoration of damaged areas. In the event damage to structures occurs due to blasting Work, suspend blasting immediately and provide a report to the CONSTRUCTION MANAGER. Submit a modified blasting plan, approved by the Blasting Consultant, to

prevent damage in future blasts. CONSTRUCTION MANAGER may require a field test to verify the appropriateness of the modified blasting plan.

J. Maintain a lightening detector at the Site. Use instrument equal to or better than a Sky Scan EWS-Pro lightening detector as sold by the Science Company of Denver, CO. Discontinue operations involving the handling or use of explosive materials and move personnel to a safe area during the approach or progress of a thunderstorm or dust storm; establish controls to prevent accidental discharge of electric blasting caps from extraneous electricity.

K. Maintain system to detect hazardous extraneous electricity. Use a digital multimeter for stray currents, if needed.

L. Maintain system to detect the accumulation of hazardous, toxic or explosive fumes.

M. Do not use waste from explosive loading such as empty boxes, paper, and fiber packing, again for any purpose. Destroy by burning at an approved location.

N. Do not abandon explosive materials.

O. Do not Blast near overhead power lines, communications lines, utility services, or other structures until the operators and/or owners have been notified and measures for safe control have been taken.

P. Loading and firing shall be directed and supervised by one designated person.

Q. Disconnect the cable between blasting and power circuit switches and lock both switches in the open position immediately after firing the shot.

R. Provide sufficient firing line to permit the blaster to be located at a safe distance from the blast.

S. Do not operate mechanized equipment (including drills) within 50 ft of a loaded hole. (EXCEPTION: Mechanized equipment may be permitted to operate within 50 ft of a loaded hole when placing blasting mats or back covering.)

3.09 BLASTING RECORDS

A. Maintain a record of each blast detonated. Include the information listed above in Article Submittals.

3.10 SUMMARY REPORT

A. Prepare comprehensive Summary Report of monitoring programs and analysis of blasting effects on existing facilities, adjacent property, and completed Work.

3.11 WARNING SYSTEM

A. Erect signboards of adequate size stating that blasting operations are taking place in the area, make clearly visible at points of access to the area. Comply with requirements of OSHA.

B. Prior to blasting, notify CONSTRUCTION MANAGER in writing and in person of blast area within 400 feet in any direction of aboveground and belowground structures Provide personnel to perform spotting duties as required.

C. Radio transmitters are not permitted in the immediate area of blasting operations, unless properly locked and sealed. Be responsible for the effect due to any stray currents and the radio communications system within the area of the Site in the case when construction occurs in an area of industrial activities. Mutually agreeable administrative procedures must be developed between the CONTRACTOR, the CONSTRUCTION MANAGER, and the supervision of the industrial activities to control the use of any equipment (including mobile transmitters and radios) that emits electromagnetic radiation within the construction area during blasting operations.

3.12 SUSPENSION OF BLASTING

A. In event damage to existing facilities, adjacent property, or completed Work occurs due to blasting, immediately suspend blasting and report damage to CONSTRUCTION MANAGER.

B. Repair damage caused by blasting to existing structures and utilities intended to remain.

C. Before resuming blasting operations, adjust design of subsequent blasts, or take other appropriate measures to control effects of blasting, and submit complete description of proposed changes for reducing potential for future damage.

D. Do not resume blasting until authorized by CONSTRUCTION MANAGER.

E. Collect spilled or undetonated explosives and dispose of according to Federal, State and Local regulations.

END OF SECTION

SECTION 31 23 19.01
DEWATERING

PART 1 GENERAL

1.01 SUBMITTALS

A. Informational Submittals:

1. Water Control Plan, within 14 days of the approval date for the construction dewatering discharge permit from the Colorado Department of Public Health and the Environment.
2. Required construction dewatering discharge permit from the Colorado Department of Public Health and the Environment, within 14 days of the approval date as specified in Section 01 41 26, Permits.
3. Well permits required by the State of Colorado.

1.02 WATER CONTROL PLAN

A. As a minimum, include:

1. Descriptions of proposed groundwater and surface water control facilities including, but not limited to, equipment; methods, standby equipment and power supply, pollution control facilities, discharge locations, and provisions for temporary water supply where required.
2. Drawings showing locations, dimensions, and relationships of elements of each system.
3. Design calculations demonstrating adequacy of proposed dewatering systems and components.

B. If system is modified during installation or operation, revise or amend and resubmit Water Control Plan.

PART 2 PRODUCTS (NOT USED)

PART 3 EXECUTION

3.01 GENERAL

A. Remove and control water during periods when necessary to properly accomplish the Work.

B. Continuously control water during course of construction, including weekends and holidays and during periods of work stoppages, and provide adequate backup systems to maintain control of water.

3.02 SURFACE AND GROUND WATER CONTROL

A. See Section 01 57 19, Temporary Environmental Controls.

B. Remove surface runoff controls when no longer needed.

C. Be responsible to obtain and comply with the requirements set forth in any applicable well permits required by the State.

3.03 DEWATERING SYSTEMS

A. Furnish, operate, and maintain dewatering systems of sufficient size and capacity to permit excavation and subsequent construction in dry and to lower and maintain groundwater level a minimum of 2 feet below the lowest point of excavation. Continuously maintain excavations free of water, regardless of source, until backfilled to final grade.

B. Include wells or well points, and other equipment and appurtenances installed outside limits of excavations and sufficiently below lowest point of excavation, or to maintain specified groundwater elevation.

C. Design and Operate Dewatering Systems:

1. To prevent loss of ground as water is removed.
2. To avoid inducing settlement or damage to existing facilities, completed Work, or adjacent property.
3. To relieve artesian pressures and resultant uplift of excavation bottom.
4. To prevent instability of faces of excavation.

D. Provide sufficient redundancy in each system to keep excavation free of water in event of component failure.

E. Provide 100 percent emergency power backup with automatic startup and switchover in event of electrical power failure.

F. Comply with requirements of applicable permits.

3.04 MONITORING FLOWS

A. Monitor volume of water pumped per calendar day from excavations, as Work progresses. Also monitor volume of water introduced each day into excavations for performance of Work. Monitor flows using measuring devices acceptable to CONSTRUCTION MANAGER.

3.05 DISPOSAL OF WATER

A. Obtain discharge permit for water disposal from authorities having jurisdiction.

B. Treat water collected by dewatering operations, as required by regulatory agencies, prior to discharge.

C. Discharge water as required by discharge permit and in manner that will not cause erosion or flooding, or otherwise damage existing facilities, completed Work, or adjacent property.

D. Remove solids from treatment facilities and perform other maintenance of treatment facilities as necessary to maintain their efficiency.

3.06 PROTECTION OF PROPERTY

A. Make assessment of potential for dewatering induced settlement. Provide and operate devices or systems, including but not limited to reinjection wells, infiltration trenches and cutoff walls, necessary to prevent damage to existing facilities, completed Work, and adjacent property.

B. Securely support existing facilities, completed Work, and adjacent property vulnerable to settlement due to dewatering operations. Include, but not be limited to, bracing, underpinning, or compaction grouting.

3.07 REMEDIATION OF GROUNDWATER DEPLETION

A. If dewatering reduces quantity or quality of water produced by existing wells, temporarily supply water to affected well owners from other sources. Furnish water of a quality and quantity equal to or exceeding the quality and quantity available to well owner prior to beginning the Work or as satisfactory to each well owner.

END OF SECTION

SECTION 31 23 23.15
TRENCH BACKFILL

PART 1 GENERAL

1.01 WORK INCLUDED

A. This section covers backfill of trenches, backfill work required for establishing surface grades, installing backfill in areas adjacent to the pipeline, installing backfill under, over, and around structures, and repair and restoration work away from trench locations.

1.02 REFERENCES

A. The following is a list of standards that may be referenced in this section:

1. American Public Works Association (APWA): Uniform Color Code for Temporary Marking of Underground Utility Locations.
2. ASTM International (ASTM):
   a. C33, Standard Specification for Concrete Aggregates.
   b. C94/C94M, Specification for Ready-Mixed Concrete.
   c. C117, Standard Test Method for Materials Finer than 75 Micrometer (No. 200) Sieve in Mineral Aggregates by Washing.
   d. C136, Standard Test Method for Sieve Analysis of Fine and Coarse Aggregates.
   e. C150, Standard Specification for Portland Cement.
   f. C618, Standard Specification for Coal Fly Ash and Raw or Calcined Natural Pozzolan for Use as a Mineral Admixture in Concrete.
   g. D75, Practice for Sampling Aggregates.
   h. D422, Standard Test Method for Particle-Size Analysis of Soils.
   i. D1140, Standard Test Method for Amount of Material in Soils Finer than the No. 200 (75 micrometer) Sieve.
   j. D1557, Test Method for Laboratory Compaction Characteristics of Soil Using Modified Effort (56,000 ft-lbf/ft3 (2,700 kN-m/m3)).
   k. D2419, Test Method for Sand Equivalent Value of Soils and Fine Aggregate.
   l. D2487, Classification of Soils for Engineering Purposes (Unified Soil Classification System).
   m. D2922, Test Methods for Density of Soil and Soil-Aggregate in Place by Nuclear Methods (Shallow Depth).
   n. D3776, Standard Test Method for Mass per Unit Area (Weight) of Fabric.
   o. D4253, Standard Test Methods for Maximum Index Density and Unit Weight of Soils Using a Vibratory Table.

p. D4254, Standard Test Methods for Minimum Index Density and Unit Weight of Soils and Calculation of Relative Density.
q. D4318, Standard Test Methods for Liquid Limit, Plastic Limit, and Plasticity Index of Soils.
r. D4533, Standard Test Method for Trapezoid Tearing Strength of Geotextiles.
s. D4832, Standard Test Method for Preparation and Testing of Controlled Low Strength Material (CLSM) Test Cylinders.
t. D4991, Standard Test Method for Leakage Testing of Empty Rigid Containers by Vacuum Method.
u. D5034, Standard Test Method for Breaking Strength and Elongation of Textile Fabrics (Grab Test).
v. D6024, Standard Test Method for Ball Drop on Controlled Low Strength Material to Determine Suitability for Load Application.

3. National Electrical Manufacturers Association (NEMA): Z535.1, Safety Color Code.

1.03 DEFINITIONS

A. Appurtenant Pipelines: Smaller diameter pipelines that include, but are not limited to, combination air release and vacuum valve piping, blowoff piping, and air vent piping.

B. Base Rock: Granular material upon which manhole bases and other structures are placed.

C. Bedding Material: Granular material upon which pipes, conduits, cables, or duct banks are placed where indicated.

D. Controlled Low Strength Material (CLSM): A mixture of portland cement, fly ash, aggregates or native material (approved by the ENGINEER) water and admixtures proportioned to provide a nonsegregating, self-consolidating, free flowing, and excavatable material that will result in a hardened, dense, nonsettling fill.

E. Completed Course: A course or layer that is ready for the next layer or next phase of the Work.

F. Embankment Material: Materials required to raise existing grade in areas other than under and surrounding structures or pipelines.

G. Imported Material: Material obtained from source(s) offsite.

H. Influence Area: Area within planes sloped downward and outward at 60-degree angle from horizontal measured from:

1. 1 foot outside outermost edge at base of foundation or slabs.
2. 1 foot outside outermost edge at surface of roadways or shoulder.
3. 0.5-foot outside exterior at spring line of pipes or culverts.

I. Lift: Loose (uncompacted) layer of material.

J. Nonfrost Susceptible Material: Nonorganic soil or granular material containing less than 3 percent by weight of grains smaller than 0.02 mm obtained from minus 3-inch material not likely to be affected by seasonal freezing and thawing.

K. Onsite Material: Materials that are obtained from allowable excavation areas within the overall Site.

L. Optimum Moisture Content:

1. Determined in accordance with ASTM Standard specified to determine maximum dry density for relative compaction.
2. Determine field moisture content on basis of fraction passing 3/4-inch sieve.

M. Pipe Zone: Backfill zone that includes full trench width and extends from bottom of pipe bedding to 70 percent of the diameter (0.70) of the pipe, as indicated, unless shown otherwise. The pipe zone includes bedding and embedment.

N. Bedding: Bedding is defined as that portion of pipe zone material between the trench subgrade, not including stabilization material, and the bottom of the pipe.

O. Embedment: Embedment is defined as that portion of the pipe zone material above the top of bedding.

P. Trench Zone: The trench zone is defined as that portion of the trench lying between the top of pipe zone and the finished surface grade, except where indicated otherwise on Drawings.

Q. Prepared Ground Surface: The prepared ground surface is defined as the ground surface after preparation per Section 31 23 13, Subgrade Preparation.

R. Prepared Trench Bottom: Graded trench bottom after excavation and installation of stabilization material, if required, but before installation of bedding material.

S. Relative Compaction: The ratio, in percent, of the as-compacted field dry density to the laboratory maximum dry density as determined by ASTM D1557. Corrections for oversize material may be applied to either the as-compacted field dry density or the maximum dry density, as determined by the ENGINEER.

T. Relative Density: As defined by ASTM D4253 and ASTM D4254.

U. Selected Backfill Material: Material available onsite that CONSTRUCTION MANAGER determines to be suitable for a specific use.

V. Segregation: Nesting of larger particles in a soil mass such that finer particles do not completely fill the voids. Segregation also refers to lenses or layers of finer material that are not locally intermixed with coarser particles in accordance with the specified gradation.

W. Suitable Material: Suitable material is defined as nonfrost susceptible selected or processed earth material free of expansive and deleterious material that conforms to these Specifications and is not designated as an Unsuitable Material as defined herein. Materials used must meet the gradations and quality requirements of these Specifications.

X. Unsuitable Material: Excavated material that is unsuitable for use as backfill, and embankment materials as determined by CONSTRUCTION MANAGER. Unsuitable material for backfill, and embankment materials, excepting topsoil includes:

1. Soils that, when classified under ASTM D2487, fall in the classifications of Pt, OH, CH, MH, ML, or OL or obvious clayey materials or expansive soils as determined by the CONSTRUCTION MANAGER.
2. Soil that cannot be compacted sufficiently to achieve the percentage of maximum density specified for the intended use.
3. Materials that contain hazardous or designated waste materials including petroleum hydrocarbons, pesticides, heavy metals, and any material that may be classified as hazardous or toxic according to applicable regulations.
4. Soils that contain greater concentrations of chloride or sulfate ions, or have a soil resistivity or pH less than the existing onsite soils.
5. Materials that are wet, soft, or frozen.
6. Materials containing asphalt, concrete chunks, cinders, ashes, refuse, vegetable or organic material, boulders, rocks, or other deleterious material.

Y. Utility Trenches: Trenches required for appurtenant pipelines, fiber optic conduit in accordance with Section 40 95 80, Fiber Optic Communication System, and other utilities that may require relocation where unknown field conflicts occur.

Z. Well-Graded: A mixture of particle sizes that has no specific concentration or lack thereof of one or more sizes producing a material type that, when compacted, produces a strong and relatively incompressible soil mass free from detrimental voids. Well-graded does not define any numerical value that must be placed on the coefficient of uniformity, coefficient of curvature, or other specific grain size distribution parameters.

1.04 SUBMITTALS

A. Action Submittals:

1. Shop Drawings: Manufacturer's descriptive literature for marking tapes.
2. Samples: Submit samples of materials proposed to be used in the Work to demonstrate material conformance with these Specifications. CONSTRUCTION MANAGER will determine sample sizes, unless otherwise indicated herein.
   a. Samples to be provided include:
      1) Type A Material (Foundation Stabilization Material).
      2) Type B Material (Concrete Sand).
      3) Type C Material (Sand).
      4) Type D Material (Earth Backfill).
      5) Type F Material (Granular Backfill).
      6) Type G Material (Aggregate Base and Aggregate Surfacing).
      7) Type H Material (Granular Drain Material).
      8) Type J Material (CLSM).
      9) Geotextile.
3. CLSM:
   a. Certified mix designs, certified laboratory performance of mix designs, and strength test results provided by a certified laboratory.
      1) Provide credentials of certified laboratory.
      2) Include material types, weight per cubic yard, and 2- and 28-day unconfined compressive strengths for each component of CLSM mix.
         a) Form a minimum of six test cylinders with proposed materials to confirm design strength and mix design in accordance with ASTM D4832. Break four of the cylinders at 7 days in conformance with applicable concrete cylinder specifications and provide results to CONSTRUCTION MANAGER for review by ENGINEER. Break the remaining two cylinders at the discretion of ENGINEER. Complete mix design and cylinder breaks at least 21 days prior to use of the material in the Work. Final mix approval and use of the material will not occur prior to confirmation for strength by the cylinder breaks.

b) Determine the materials and proportions used to meet the requirements of these Specifications. Continuously monitor soil composition. Perform sieve analysis and adjust CLSM mix if general composition changes or as directed by ENGINEER. Modify the CLSM mix as necessary to meet the strength, flowability, pumpability, and set time requirements for each individual pour.

c) At least 30 days before placing CLSM, submit to CONSTRUCTION MANAGER for ENGINEER review, a mix design for each CLSM to be used. Include trial lab and field data, with 6-inch by 12-inch cylinder breaks performed at 7, 14, and 28 days.

d) Do not place CLSM until ENGINEER has approved the mix design. ENGINEER's approval of the mix design indicates conditional acceptance. Final acceptance will be based on tests conducted on field samples and conformance with these Specifications.

e) If native soils are used for CLSM, perform verification testing for every 5,000 feet of pipeline installed or as directed by CONSTRUCTION MANAGER. Base verification testing on 7-day compressive strengths. Take a minimum of three test cylinders per location.

B. Informational Submittals:

1. Catalog and manufacturer's data sheets for compaction equipment.
2. Certified Gradation Analysis: Submit not less than 30 days prior to delivery for imported materials or for anticipated use of onsite excavated materials, except for trench stabilization material that will be submitted prior to material delivery to Site.
3. Submit credentials of certified lab conducting gradation analysis.
4. Submit a description and location of proposed sources of imported material. Include documentation that imported materials are free of hazardous substances.
5. Submit a description of equipment and location of the proposed materials processing operation.
6. Test for conformance and submit certification and test records of materials showing that they meet the applicable requirements prior to commencing permanent placement of the materials for the Work. Tests, certification, and test records of materials will be performed within 6 months of submittal.

7. Submit a description of material testing work plan and program including as minimum onsite and offsite soils/materials laboratory testing facility location, facility details, testing certifications, experience of testing personnel, frequency of testing regarding material quality and material placement.

1.05 PROCESSED MATERIAL ACCEPTANCE

A. Processed materials specified are subject to the following requirements:

1. Make tests necessary to locate acceptable processed materials. Submit certification that the material conforms to the requirements along with copies of the test results from a qualified commercial testing laboratory and representative samples of materials to CONSTRUCTION MANAGER for review by ENGINEER at least 30 days before the material is required for use. Clearly mark representative samples to show the location of the source of the material and the intended use. Conduct sampling of the processed material in accordance with ASTM D75, including appendixes. Tentative acceptance of the processed material will be based on an inspection of the source and processing method by ENGINEER and/or the certified test results submitted. Do not deliver processed materials to the Site or used in the Work until the proposed source, processing methods, and materials tests have been accepted in writing by ENGINEER. Final acceptance will be based on tests made on samples of material taken from the completed and compacted course.
2. After acceptable processed materials are located or produced, make periodic tests on samples taken at the place of production prior to delivery to the Site, as requested by CONSTRUCTION MANAGER. In addition, sample and test the finished in-place product. CONSTRUCTION MANAGER reserves the right to select the location of the samples and tests to be performed. Take samples and tests from prepared materials at the frequency determined by CONSTRUCTION MANAGER. If variation in gradation is occurring, or if the material appears to depart from the specification, testing frequency required may be increased by CONSTRUCTION MANAGER.
3. Deliver gradation test results to CONSTRUCTION MANAGER within 24 hours after sampling. Deliver other test results to CONSTRUCTION MANAGER upon completion of the tests.
4. If tests conducted by either the CONTRACTOR or UTILITIES material testing firm indicate that the material does not meet the requirements, terminate material placement until the requirements are met. Remove and replace material that does not conform to the requirements.

PART 2 PRODUCTS

2.01 SUITABLE BACKFILL MATERIAL REQUIREMENTS

A. Material: Nonfrost susceptible and defined as suitable material.

B. Backfill materials to be placed within 6 inches of any structure or pipe are to be unfrozen and free of rocks or unbroken masses of earth materials having a maximum dimension larger than 3 inches.

C. Backfill materials may be suitable materials obtained from excavations, may be processed on-site materials, or may be imported. If imported materials are required by this section or to meet the quantity requirements of the Work, provide the imported materials as necessary to complete the Work.

D. The following types of backfill materials are defined:

1. Type A (Foundation Stabilization Material):
   a. Crushed rock, gravel, or pit run rock.
   b. Uniformly graded from course to fine, with less than 8 percent by weight passing the 1/4-inch sieve.
   c. Non-frost susceptible, unfrozen, free from clay balls, organic matter, or other deleterious materials.
   d. Maximum 2-1/2-inch particle size.
2. Type B (Concrete Sand): Provide Colorado Department of Transportation (CDOT) fine aggregate for concrete conforming to CDOT, Section 703.01.
3. Type C (Sand):
   a. Non-frost susceptible, unfrozen, friable, free of clay balls, roots, organic material, and other deleterious materials.
   b. Imported, clean, well-graded, free draining sand with no clay fines, meeting the following requirements.

Sieve Size	Percent Passing by Weight
Well-Graded Sand	
3/8-inch	100
No. 4	70 – 100
No. 8	36 – 93
No. 16	20 – 80
No. 30	8 – 65
No. 50	2 – 30
No. 100	1 – 10
No. 200	0 – 3

4. Type D (Earth Backfill):
   a. Native or import soil, loam, or other material suitable for use as backfill.
   b. Unfrozen material free from roots and organic matter, refuse, boulders, cobbles, and material that would be retained on a 3-inch screen, and other deleterious materials.
   c. If placed within 6-inches of pipe, free from shale or other sharp, angular material.
5. Type E (Clayey Soil Cover):
   a. Earth backfill as specified hereinbefore except with a maximum particle size of 1 inch, and with at least 50 percent passing the No. 200 sieve.
6. Type F (Granular backfill):
   a. Clean crushed gravel or crushed rock.
   b. Unfrozen, friable, free of clay balls, organic matter, and other deleterious materials.
   c. 3/4-inch maximum particle size.
   d. Well graded from coarse to fine and containing sufficient fines to bind materials when compacting but with maximum 8 percent by weight passing the No. 200 sieve, as determined using ASTM C117.
7. Type G (Aggregate Base and Aggregate Surfacing):): Class 6 aggregate material to be crushed material with at least 50 percent of the material remaining upon the No. 4 sieve having at least two fractured faces and in accordance with Section 32 11 23, Aggregate Base Courses.
8. Type H (Granular Drain Material):
   a. Gradation: ASTM C117 and C136.

Sieve Size	Percent Passing by Weight
1-1/2 inch	100
3/4 inch	90 – 100
No. 4	70 – 100
No. 16	50 – 70
No. 50	20 – 40
No. 200	0 – 3

9. Type J (CLSM): Consists of a mixture of portland cement, aggregate, fly ash, water, and approved admixtures conforming to the following requirements or equivalent approved by ENGINEER:
   a. Portland Cement: ASTM C150, Type II.
   b. Aggregate:
      1) ASTM C33, Size 7.
      2) Native material as approved by CONSTRUCTION MANAGER. Maximum aggregate size shall be 1.0 inch with a maximum of 30 percent passing the No. 200 sieve.

Do not exceed 0.3 percent dry weight for the soluble sulfate content of aggregate in the mixture. Segregate and do not use pockets of clayey silt and highly weathered bedrock in CLSM. Break soils into their individual particles. Clay dry balls or masses of cemented material are not allowed in the final mixture.

3) The minus 40 sieve fraction to have a maximum plasticity index of 3 as defined by ASTM D4318.

c. Water: Potable quality.

d. Fly Ash: Class C, ASTM C618, Class C, or approved alternate.

e. Proportion the CLSM to be a flowable, nonsegregating, self-consolidating low shrink slurry. Determine the materials and proportions used to meet the requirements of these Specifications.

f. The unconfined compressive strength at 2 days to be a minimum of 50 psi. The unconfined compressive strength at 28 days to be a maximum of 150 psi.

10. Type K (Topsoil): As specified in Section 31 10 00, Site Clearing.

11. Type M (Lean Concrete): Unreinforced concrete backfill conforming to the requirements for concrete fill as specified in Section 03 30 10, Structural Reinforced Concrete.

12. Type N (Filter Material): Provide CDOT filter material, Class A, conforming to CDOT 703.09, Table 703-5.

13. Riprap: In accordance with Section 31 37 00, Riprap.

14. Type O: Provide CDOT fine aggregate (AASHTO M6) for concrete conforming with CDOT Section 703.01, Table 703-1.

15. Type P (Stream Channel): Stream channel material or native channel material from trench where indicated.

2.02 WATER

A. Construction Water: As specified in Section 01 51 00, Temporary Utilities.

B. Water for Backfilling and Compaction: Free from oil and deleterious amounts of acids, alkalies, and organic materials. Provide from a source approved by the CONSTRUCTION MANAGER. Transport water from the source to the point of application by methods approved by the CONSTRUCTION MANAGER.

2.03 GEOTEXTILES

A. As specified in Section 31 32 19.16, Geotextile.

2.04 MARKING TAPE

A. Nondetectable:

1. Inert polyethylene, impervious to known alkalis, acids, chemical reagents, and solvents likely to be encountered in soil.

2. Thickness: Minimum 5 mils.
3. Width: 12 inches.
4. Identifying Lettering: Minimum 1-inch high, permanent black lettering imprinted continuously over entire length.
   a. "Colorado Springs Utilities—Waterline Buried Below".
   b. As required by owners of utilities and in accordance with Section 01 31 13, Project Coordination.
5. Manufacturers and Products:
   a. Reef Industries; Terra Tape.
   b. Mutual Industries; Non-detectable Tape.
   c. Presco; Non-detectable Tape.
6. Color: Blue, in accordance with APWA Uniform Color Code for Temporary Marking of Underground Facilities.

PART 3 EXECUTION

3.01 BACKFILL—GENERAL

A. Do not drop backfill directly upon any structure or pipe. Do not place backfill around or upon any structure until the concrete has attained sufficient strength to withstand the loads imposed.

B. Place backfill after water is removed from the excavation as specified in Section 31 23 19.01, Dewatering, and the excavation bottom or surface upon which backfill is to be placed is firm and has been dried to a moisture content suitable for scarifying and recompaction.

C. If a moveable trench shield is used during excavation, pipe installation, and backfill operations, move the shield by lifting the shield free of the trench bottom or backfill and then moving the shield horizontally. Do not drag trench shields along the trench causing damage or displacement to the trench sidewalls, the pipe, or the bedding and backfill.

D. Remove loose sloughing or caving soil and rock materials immediately prior to placement of backfill materials, the bottoms and sidewalls of trenches, and structure excavations. Before placement of backfill materials, ensure that trench sidewalls consist of excavated surfaces that are in a relatively undisturbed condition.

E. Grade disturbed areas to preconstruction contours so preconstruction drainage paths are re-established.

F. Prior to backfill, provide access to CONSTRUCTION MANAGER to GPS or survey appurtenances, horizontal points of inflections, test stations, steel casing pipe, and handholes.

3.02 TRENCH BOTTOM

A. Firm Subgrade: Grade with hand tools, remove loose and disturbed material, and trim off high areas and ridges left by excavating bucket teeth. Allow space for bedding material if shown or specified.

B. Soft Subgrade: If subgrade is encountered that may require removal to prevent pipe settlement, notify CONSTRUCTION MANAGER. CONSTRUCTION MANAGER will determine depth of overexcavation, if any is required.

3.03 GEOTEXTILE INSTALLATION

A. Where shown and as specified in Section 31 32 19.16, Geotextile.

3.04 TRENCH STABILIZATION MATERIAL INSTALLATION

A. Rebuild trench bottom with Type A material as shown.

B. Place material over full width of trench in 6-inch lifts to required grade, providing allowance for bedding thickness.

C. Compact each lift so as to provide a firm, unyielding support for the bedding material prior to placing succeeding lifts.

D. Extend geotextile for full width of trench bottom and up the trench wall to the top of the pipe zone, or base material for manholes and miscellaneous structures.

E. Anchor geotextile trench walls prior to placing trench stabilization or bedding material.

F. Provide 24-inch minimum overlap at joints.

3.05 BEDDING

A. Use Type F material or Type J material for pipe bedding.

1. If Type F material is used in the pipe zone, Type F material is required for pipe bedding as shown in the Drawings.
2. If Type J material is used in the pipe zone, support the pipe above the trench floor on moist sandbag supports or other suitable material as approved by CONSTRUCTION MANAGER and as shown on the Drawings.
3. Place Type J material in accordance with Paragraph 3.09.A in this section.

B. Place over the full width of the prepared trench bottom in two equal lifts.

C. Hand grade and compact each lift to provide a firm, unyielding surface.

D. Minimum Thickness: As follows:

1. Pipe 15 inches and Smaller: 4 inches.
2. Pipe 18 inches and Larger: 6 inches.
3. Conduit: 3 inches.

E. Check grade and correct irregularities in bedding material. Loosen top 1 inch to 2 inches of compacted bedding material with a rake or by other means to provide a cushion before laying each section of pipe, appurtenant piping, or conduit.

F. Install to form continuous and uniform support except at bell holes, if applicable, or minor disturbances resulting from removal off lifting tackle.

3.06 USE OF BACKFILL AND EMBANKMENT MATERIAL TYPES

A. Use the types of materials designated herein for required backfill and embankment construction.

B. Where these Specifications conflict with the requirements of any local agency having jurisdiction, notify CONSTRUCTION MANAGER immediately. In case of conflict between types of backfills, use the agency-specified backfill material if that material provides a greater degree of support, as determined by CONSTRUCTION MANAGER.

C. Use backfill types in accordance with the following provisions, unless otherwise shown on the Drawings:

1. Roadway Embankments: Construct of a material that conforms to the requirements of Type D material.
2. Trench Backfill: Type D material, Type G material, Type J material, Type K material, and Type P material where indicated for areas where pipes are removed and for backfilling of new pipes above the pipe zone.
3. Trench Stabilization: Type A material with geotextile envelope as indicated.
4. Pipe Bedding: Type F or Type J material, unless otherwise indicated.
5. Pipe Zone: Type F or Type J material, unless otherwise indicated.
6. Aggregate Base: Type G material for areas under pavements, areas where aggregate surfacing is required, or where shown under riprap, unless otherwise indicated.
7. Backfill Around Structures: Type F material up to 3 feet from finished grade; Type E material for top 3 feet from finished grade, unless otherwise specified. Extend Type E and Type F material in horizontal direction, around structure, equal to a minimum of one-half the total wall height of structure, unless otherwise shown on the Drawings.
8. Backfill Beneath Structures: Type F material, except where indicated.
9. Backfill Around Grade Control and Stormwater Structures: Type D material.

10. Overexcavated Areas: Backfill for areas overexcavated below the elevations and limits shown are as follows:

Location	Materials
Under Structures	Type F or Type M
Under Pipelines	Type A and Type C as indicated

3.07 PLACING AND SPREADING OF BACKFILL AND EMBANKMENT MATERIALS

A. Place and spread evenly in layers so that the depth of each uncompacted layer does not exceed 6 inches in thickness, excluding riprap, Type J and Type P materials.

B. During spreading, thoroughly mix each layer as necessary to promote uniformity of material in each layer. Place material across the full width of the area in horizontal layers.

C. Where the material moisture content is more than 2 percent below the optimum moisture content, add water before or during spreading until the proper moisture content is achieved. At the time of compaction, do not exceed the moisture content of more than 2 percent below optimum.

D. Where the material moisture content is more than 2 percent above the optimum moisture content to permit the indicated degree of compaction, dry the material or mix with drier material until the moisture content is satisfactory.

3.08 COMPACTION OF BACKFILL AND EMBANKMENT MATERIALS

A. Mechanically compact each layer of backfill materials as defined herein to the indicated percentage of maximum density. Use equipment that is consistently capable of achieving the required degree of compaction and compact over its entire area while the material is at the required moisture content.

B. Do not use equipment weighing more than 1,000 pounds closer to walls than a horizontal distance equal to the depth of the backfill at that time. Use hand operated power compaction equipment where use of heavier equipment is impractical or restricted due to weight limitations.

C. Limit equipment loads during backfilling of pipe trench and compacting of backfill to prevent damage to the pipe, pipe lining, or pipe coating from over-deflection of, or stress to, the installed pipe. For pipe cover depths less than 3 feet, backfill around and over pipelines that is mechanically compacted using hand operated, vibratory compactors and rollers. For pipe cover depths greater than 3 feet and less than 15 feet, limit combined earth cover, equipment and compaction impact loads to those that would impart 15 pounds

per square inch (psi) total load or less at the top of the pipe. For cover depths 15 feet and greater, do not increase the earth cover load imparted to the top of the pipe by more than 1 psi for combined equipment and compaction impact loads. Do not damage the pipe, pipe lining, pipe coating, or pipe appurtenances.

D. Do not use power-driven impact type compactors for compaction until at least 4 feet of backfill is placed over top of pipe. Backfill to grade with proper allowances for topsoil, crushed rock surfacing, and pavement thickness, wherever applicable. Backfill around structures with same class backfill as specified for adjacent trench, unless otherwise shown or specified.

3.09 PIPE AND UTILITY TRENCH BACKFILL

A. Pipe Zone:

1. Type F or Type J material is required for the pipe zone.
2. Backfill the pipe zone with the required material. Do not damage pipeline coating, cathodic bonds, and the pipe itself during the installation and backfill operations. Restrain and anchor pipe or conduit as necessary to prevent their movement during backfill operations.
3. Width of pipe zone consistent with Drawings and is dependent on pipe zone backfill.
   a. For Type F Material Pipe Zone Backfill: Minimum trench width is pipe diameter plus 18 inches on both sides of pipe.
   b. For Type J Material Pipe Zone Backfill: Minimum trench width is pipe diameter plus 12 inches on both sides of pipe.
4. If a moveable trench shield is used during backfill operations, lift the shield to a location above each layer of backfill material prior to placement of the layer. Do not displace the pipe or backfill while the shield is being moved.
5. Depth of pipe zone:
   a. Pipe: From top of bedding to a minimum 0.7 of the pipe diameter, unless shown otherwise.
   b. Conduit: Not less than 3 inches above conduit, unless shown otherwise.
6. For Type F Material:
   a. Place material simultaneously in lifts on both sides of pipe and between pipes and conduits installed in same trench.
      1) Pipe 10-Inch and Smaller Diameter: First lift less than or equal to 1/2 pipe diameter.
      2) Pipe over 10-Inch Diameter: Maximum 6-inch lifts.
   b. Thoroughly tamp each lift, including area under haunches, with handheld tamping bars supplemented by “walking-in” and slicing material under haunches with a shovel to ensure that voids are completely filled before placing each succeeding lift.

c. After the full depth of the pipe zone material has been placed as specified, compact the material by a minimum of three passes with a vibratory plate compactor only over the area between the sides of the pipe and the trench walls.

d. Do not use jetting or power-driven impact compactors to compact pipe zone material.

7. For Type J Material:

a. Discharge from side of trench from truck-mounted drum type mixer.

b. Discharge CLSM into the trench at a temperature below 71 degrees F.

c. Utilize pumps or chutes to place the CLSM in the trench. When CLSM material is indicated for the entire pipe zone, continue placing CLSM on one side of the pipe until CLSM has traveled under the pipe and up the other side to a depth of 1 foot above the pipe bottom. Adjust water in mixture to maintain fluid consistency but maintain strength requirements. Rod or vibrate CLSM as necessary to keep soil particles in suspension so that the material flows freely.

d. Maintain stability of pipe and conduit throughout CLSM placement and curing. Anchor pipe as needed to prevent movement of the pipe caused by flotation or lateral displacement. If any movement occurs, remove the CLSM material and place the pipe back on line and grade. Remove sloughed material or other debris from top of previously placed CLSM.

e. Allow CLSM to set before placing backfill. Prior to placing backfill over CLSM, achieve an indentation diameter less than or equal to 3 inches as determined by ASTM D6024.

B. Trench Zone:

1. After the pipe zone backfill has been placed as indicated and obtained initial set, backfilling of the trench zone may proceed.

2. Do not damage pipe coating or pipe during installation or compaction of trench zone.

3. Install Type D material in the trench zone, except where indicated otherwise.

3.10 EMBANKMENT CONSTRUCTION

A. Prepare the area where an embankment is to be constructed in accordance with Section 31 10 00, Site Clearing, and Section 31 23 16.13, Excavation. Place embankment material (Type D Material) and spread evenly in approximately horizontal layers. Moisten each layer or aerate, as necessary. Unless otherwise approved by CONSTRUCTION MANAGER, do not exceed 8 inches of compacted thickness for the depth of each uncompacted layer.

B. When an embankment is to be made and compacted against hillsides or slopes steeper than 5H:1V, horizontally bench the slopes of hillsides or fills to key the embankment to the underlying ground. Remove and recompact a minimum of 12 inches normal to the slope of the hillside as the embankment is brought up in layers. Recompact material thus cut along with the new material as necessary. Prepare hillside or slopes 5H:1V or flatter in accordance with Paragraph A, above.

3.11 COMPACTION REQUIREMENTS

A. Comply with the following compaction test requirements in accordance with ASTM D1557. Where agency or utility company requirements govern, apply the highest compaction standards.

Location or Use of Backfill	**Percentage of Maximum Density**
Backfill of trenches where pipes are removed, not within influence area of structures or pipes	85
Backfill of trenches where pipes are removed, within influence area of existing or new structures	95
Trench zone backfill, top 6 inches below topsoil layer	Uncompacted
Trench zone backfill, top 2 feet below top 6 inches below topsoil	85
Trench zone backfill top 3 feet beneath areas indicated as stream channels	85
Pipe bedding, pipe zone backfill, and overexcavated zones under bedding, including trench plugs	95
Trench zone backfill beneath paved areas or structures – 0 to 2 feet	95
Trench zone backfill beneath paved areas or structures – 2 feet or greater	90
Trench zone backfill, not beneath paved areas or structures	85
Embankments	90
Embankment beneath riprap	95
Backfill beneath structures and pipes removed and replaced	95
Backfill around structures	90

Location or Use of Backfill	Percentage of Maximum Density
Topsoil	Uncompacted
Aggregate base and aggregate surfacing for paved areas, gravel/dirt roads, trails, or subbase	95
Trail subgrade	90
Trail subgrade beneath existing unimproved roads	95

3.12 RIPRAP INSTALLATION

A. Install riprap in accordance with Section 31 37 00, Riprap.

3.13 MATERIALS TESTING

A. Perform particle size analysis of soils and aggregates in accordance with ASTM C136, Sieve Analysis of Fine and Coarse Aggregate, and ASTM C117, Materials Finer than No. 200 Sieve in Mineral Aggregate by Washing.

B. Determination of sand equivalent in accordance with ASTM D2419.

C. Unified Soil Classification System: References in this section to soil classification types and standards means and is defined as indicated in ASTM D2487.

3.14 FIELD TESTING

A. During the course of the Work, UTILITIES' materials testing firm will perform such tests as are required to identify materials, to determine compaction characteristics, to determine moisture content, and to determine density of backfill in place. These tests will be used to verify that backfill and materials conform to the requirements of these Specifications. Such tests are not intended to provide information required for the proper execution of the Work and will be performed at UTILITIES' expense.

B. CONTRACTOR may conduct testing at any time to verify proper execution of the Work.

C. Tests will be made by the UTILITIES' materials testing laboratory and field testing service in accordance with the reference standards listed in Paragraph 1.02.A of this section and other tests that may be deemed necessary by the CONSTRUCTION MANAGER during the course of the Work.

D. Where soil material is required to be compacted to a percentage of maximum dry density, the maximum dry density at optimum moisture content will be determined in accordance with ASTM D1557. Field density in-place tests will be performed in accordance with ASTM D1556, ASTM D2922, or by such other means determined by the CONSTRUCTION MANAGER. Rock correction factors will be applied as applicable. In areas where collapse-prone soils are expected, UTILITIES' field testing operations will conduct additional compaction testing on subgrade to delineate areas for collapse-prone overexcavation and recompaction.

E. In case the test of the backfill shows non-compliance with the required density, perform remedies as may be required to insure compliance.

F. Provide test trenches and excavations including excavation, trench support, and groundwater removal for UTILITIES' field soils testing operations. Provide trenches and excavations at the locations and to the depths required by UTILITIES.

3.15 FINISHED ELEVATIONS

A. Correct any discrepancies between actual ground surface and the finished elevations called for on the Drawings.

B. Remove stock dams and berms where indicated and within Work Limits. Restore or match upstream and downstream slopes.

3.16 MARKING TAPE INSTALLATION

A. Continuously install marking tape along centerline of buried piping at vertical locations along the trench as shown on the Drawings. For marking tape specific to fiber optic conduits, see Section 40 95 80, Fiber Optic Communication System.

3.17 TRENCH PLUG INSTALLATION

A. Trench Plug: Place trench plugs where shown on the Drawings or as directed by the CONSTRUCTION MANAGER.

3.18 REPLACEMENT OF TOPSOIL

A. Replace topsoil as specified in Section 32 91 13, Soil Preparation.

B. Maintain the finished grade of topsoil even with adjacent area and grade as necessary to restore drainage.

3.19 MAINTENANCE OF TRENCH BACKFILL

A. After each section of trench is backfilled, maintain the surface of the backfilled trench even with the adjacent ground surface until final surface restoration is completed.

B. Gravel Surfacing Rock: Add gravel surfacing rock where applicable and as necessary to keep the surface of the backfilled trench even with the adjacent ground surface, and grade and compact as necessary to keep the surface of backfilled trenches smooth, free from ruts and potholes, and suitable for normal traffic flow.

C. Topsoil: Add topsoil where applicable and as necessary to maintain the surface of the backfilled trench level with the adjacent ground surface.

D. Asphaltic Pavement: Replace settled areas or fill with asphalt as specified in Section 32 12 16, Asphalt Paving.

E. Other Areas: Add excavated material where applicable and keep the surface of the backfilled trench level with the adjacent ground surface.

3.20 SETTLEMENT OF BACKFILL

A. Settlement of trench backfill, or facilities constructed over trench backfill will be considered a result of defective compaction of trench backfill.

3.21 SITE CLEANUP

A. Dispose of excess excavated materials in accordance with Section 31 23 16.13, Excavation.

END OF SECTION

SECTION 31 32 19.16
GEOTEXTILE

PART 1 GENERAL

1.01 REFERENCES

A. The following is a list of standards that may be referenced in this section:

1. ASTM International (ASTM):
   a. D4355, Test Method for Deterioration of Geotextiles from Exposure to Ultraviolet Light and Water (Xenon-Arc Type Apparatus).
   b. D4491, Test Methods for Water Permeability of Geotextiles by Permittivity.
   c. D4533, Test Method for Trapezoid Tearing Strength of Geotextiles.
   d. D4595, Test Method for Tensile Properties of Geotextiles by the Wide-Width Strip Method.
   e. D4632, Test Method for Breaking Load and Elongation of Geotextiles.
   f. D4716, Test Method for Determining the In-Plane Flow Rate Per-Unit-Width and Hydraulic Transmissivity of a Geosynthetic Using Constant Head.
   g. D4751, Test Method for Determining Apparent Opening Size of a Geotextile.
   h. D4833, Test Method for Index Puncture Resistance of Geotextiles, Geomembranes, and Related Products.
   i. D4884, Test Method for Strength of Sewn or Thermally Bonded Seams of Geotextiles.
   j. D6193, Practice for Stitches and Seams.

1.02 DEFINITIONS

A. Fabric: Geotextile, a permeable geosynthetic comprised solely of textiles.

B. Minimum Average Roll Value (MinARV): Minimum of series of average roll values representative of geotextile furnished.

C. Maximum Average Roll Value (MaxARV): Maximum of series of average roll values representative of geotextile furnished.

D. Nondestructive Sample: Sample representative of finished Work, prepared for testing without destruction of Work.

E. Overlap: Distance measured perpendicular from overlapping edge of one sheet to underlying edge of adjacent sheet.

F. Seam Efficiency: Ratio of tensile strength across seam to strength of intact geotextile, when tested according to ASTM D4884.

1.03 SUBMITTALS

A. Action Submittals:

1. Shop Drawings:
   a. Manufacturer material specifications and product literature for geotextile and sewing thread.
   b. Installation drawings showing geotextile sheet layout, location of seams, direction of overlap, and sewn seams.
   c. Description of proposed method of geotextile deployment, sewing equipment, sewing methods, and provisions for holding geotextile temporarily in place until permanently secured.
2. Samples:
   a. Geotextile: One-piece, minimum 18 inches long, taken across full width of roll of each type and weight of geotextile furnished for Project. Label each with brand name and furnish documentation of lot and roll number from which each Sample was obtained.
   b. Securing Pin and Washer: One each.

B. Informational Submittals: Certifications from each geotextile manufacturer and sewing thread manufacturer that furnished products have specified property values. Certified property values to be either minimum or maximum average roll values, as appropriate, for geotextiles furnished.

1.04 DELIVERY, STORAGE, AND HANDLING

A. Deliver each roll with sufficient information attached to identify it for inventory and quality control.

B. Handle products in manner that maintains undamaged condition.

C. Do not store products directly on ground. Ship and store geotextile with suitable wrapping for protection against moisture and ultraviolet exposure. Store geotextile in way that protects it from elements. If stored outdoors, elevate and protect geotextile with waterproof cover.

1.05 SCHEDULING AND SEQUENCING

A. Where geotextile is to be laid directly upon ground surface, prepare subgrade as specified in Section 31 23 13, Subgrade Preparation, first.

B. Notify CONSTRUCTION MANAGER whenever geotextiles are to be placed. Do not place geotextile without CONSTRUCTION MANAGER's approval of underlying materials.

PART 2 PRODUCTS

2.01 WOVEN GEOTEXTILE

A. Composed of polymeric yarn interlaced to form planar structure with uniform weave pattern.

B. Sheet Edges: Selvaged or finished to prevent outer material from separating from sheet.

C. Physical Properties: Conform to requirements in Table No. 1

Table No. 1
Physical Property Requirements for Woven Geotextile

Property	Requirement	Test Method
Apparent Opening Size (AOS)	100 U.S. Standard Sieve Size	ASTM D4751
Water Permittivity	2 $sec.^{-1}$, MinARV	ASTM D4491 (Falling Head)
Ultraviolet Radiation Resistance	70 percent strength retention, MinARV after 500 hours	ASTM D4355

2.02 NONWOVEN GEOTEXTILE

A. Pervious sheet of polyester, polypropylene, or polyethylene fabricated into stable network of fibers that retain their relative position with respect to each other. Nonwoven geotextile to be composed of continuous or discontinuous (staple) fibers held together through needle-punching, spun-bonding, thermal-bonding, or resin-bonding.

B. Geotextile Edges: Selvaged or otherwise finished to prevent outer material from pulling away from geotextile.

C. Unseamed Sheet Width: Minimum 12 feet.

D. Nominal Weight per Square Yard:

1. 12-ounce for trench stabilization applications.
2. 16-ounce for riprap application.

E. Physical Properties: Conform to requirements in Table No. 1 for 12-ounce and Table No. 2 for 16-ounce.

Table No. 1 **Physical Property Requirements for Nonwoven Geotextile**		
Property	**Requirement**	**Test Method**
Water Permittivity	1.0 $sec.^{-1}$, MinARV	ASTM D4491 (Falling Head)
Transmissivity, Planar Waterflow/Siphonage	0.5 ft^2/sec., MinARV	ASTM D4716
Apparent Opening Size (AOS)	100 U.S. Standard Sieve Size	ASTM D4751
Grab Tensile Strength, Machine Direction	300 lb/in, MinARV	ASTM D4632
Grab Elongation, Machine Direction	50 percent, MaxARV	ASTM D4632
Puncture Strength	175 lb, MinARV	ASTM D4833
Trapezoid Tear Strength	115 lb, MinARV	ASTM D4533
Ultraviolet Radiation Resistance	70 percent strength retention, MinARV after 500 hours	ASTM D4355

Table No. 2 **Physical Property Requirements for Nonwoven Geotextile**		
Property	**Requirement**	**Test Method**
Water Permittivity	0.7 $sec.^{-1}$, MinARV	ASTM D4491 (Falling Head)
Transmissivity, Planar Waterflow/Siphonage	0.5 ft^2/sec., MinARV	ASTM D4716
Apparent Opening Size (AOS)	100 U.S. Standard Sieve Size	ASTM D4751
Grab Tensile Strength, Machine Direction	380 lb/in, MinARV	ASTM D4632
Grab Elongation, Machine Direction	50 percent, MaxARV	ASTM D4632
Puncture Strength	240 lb, MinARV	ASTM D4833

Table No. 2 Physical Property Requirements for Nonwoven Geotextile		
Property	**Requirement**	**Test Method**
Trapezoid Tear Strength	145 lb, MinARV	ASTM D4533
Ultraviolet Radiation Resistance	70 percent strength retention, MinARV after 500 hours	ASTM D4355

2.03 SEWING THREAD

A. Polypropylene, polyester, or Kevlar thread.

B. Durability: Equal to or greater than durability of geotextile sewn.

2.04 SECURING PINS

A. Steel Rods or Bars:

1. 3/16-inch diameter.
2. Pointed at one end.
3. With head on other end sufficiently large to retain washer.
4. Minimum Length: 12 inches.

B. Steel Washers for Securing Pins:

1. Outside Diameter: Not less than 1.5 inches.
2. Inside Diameter: 1/4-inch.
3. Thickness: 1/8 inch.

C. Steel Wire Staples:

1. U-shaped.
2. 10 gauge.
3. Minimum Length: 6 inches.

PART 3 EXECUTION

3.01 LAYING GEOTEXTILE

A. Lay and maintain geotextile smooth and free of tension, folds, wrinkles, or creases.

3.02 SHEET ORIENTATION ON SLOPES

A. Orient geotextile with long dimension of each sheet parallel to direction of slope.

B. Geotextile may be oriented with long dimension of sheet transverse to direction of slope only if sheet width, without unsewn seams, is sufficient to cover entire slope and anchor trench and to extend at least 18 inches beyond toe of slope.

3.03 JOINTS

A. Unseamed Joints:

1. Overlapped.
2. Overlap, unless otherwise shown:
   a. Foundation/Subgrade Stabilization: Minimum 18 inches.
   b. Riprap: Minimum 18 inches.
   c. Drain Trenches: Minimum 18 inches, except overlap to equal trench width if trench width is less than 18 inches.
   d. Other Applications: Minimum 12 inches.

B. Sewn Seams: Made wherever stress transfer from one geotextile sheet to another is necessary. Sewn seams, as approved by CONSTRUCTION MANAGER, also may be used instead of overlap at joints for applications that do not require stress transfer.

1. Seam Efficiency:
   a. Minimum 70 percent.
   b. Verified by preparing and testing minimum of one set of nondestructive Samples per acre of each type and weight of geotextile installed.
   c. Tested according to ASTM D4884.
2. Types:
   a. Preferred: “J” type seams.
   b. Acceptable: Flat or butterfly seams.
3. Stitch Count: Minimum three to maximum seven stitches per inch.
4. Stitch Type: Double-thread chainstitch according to ASTM D6193.
5. Sewing Machines: Capable of penetrating four layers of geotextile.
6. Stitch Location: 2 inches from geotextile sheet edges, or more, if necessary to develop required seam strength.

3.04 SECURING GEOTEXTILE

A. Secure geotextile during installation as necessary with sandbags or other means approved by CONSTRUCTION MANAGER.

B. Secure Geotextile with Securing Pins:

1. Insert securing pins with washers through geotextile.
2. Securing Pin Alignment:
   a. Midway between edges of overlaps.
   b. 6 inches from free edges.

3. Spacing of Securing Pins:

Slope	Maximum Pin Spacing
Steeper than 3:1	2 feet
3:1 to 4:1	3 feet
Flatter than 4:1	5 feet

4. Install additional pins across each geotextile sheet as necessary to prevent slippage of geotextile or to prevent wind from blowing geotextile out of position.
5. Push each securing pin through geotextile until washer bears against geotextile and secures it firmly to subgrade.

3.05 PLACING PRODUCTS OVER GEOTEXTILE

A. Before placing material over geotextile, notify CONSTRUCTION MANAGER. Do not cover installed geotextile until after CONSTRUCTION MANAGER provides authorization to proceed.

B. If tears, punctures, or other geotextile damage occurs during placement of overlying products, remove overlying products as necessary to expose damaged geotextile. Repair damage as specified in Article Repairing Geotextile.

3.06 INSTALLING GEOTEXTILE IN TRENCHES

A. Place geotextile in a way that will completely envelope Type A material to be placed in trench and with specified overlap at joints. Overlap geotextile in direction of flow. Place geotextile in a way and with sufficient slack for geotextile to contact trench bottom and sides fully when trench is backfilled.

B. After Type A material is placed to required grade and compacted, fold geotextile over top of Type A material, unless otherwise shown. Maintain overlap until overlying fill or backfill is placed.

3.07 RIPRAP APPLICATIONS

A. See Section 31 37 00, Riprap.

B. Overlap geotextile at each joint with upstream sheet of geotextile overlapping downstream sheet.

C. Sew joints where wave run-up may occur.

D. Limit height of riprap fall onto geotextile to prevent damage.

E. Drop Height:

1. 1 foot or less for greater than 200-pound rock.
2. 3 feet for less than 200-pound rock.

3.08 SILT FENCE APPLICATIONS

A. Install geotextile in one piece, or continuously sewn to make one piece, for full length and height of fence, including portion of geotextile buried in toe trench.

B. Install bottom edge of sheet in toe trench and backfill in a way that securely anchors geotextile in trench.

C. Securely fasten geotextile to each support post in a way that will not result in tearing of geotextile when fence is subjected to service loads.

D. Promptly repair or replace silt fence that becomes damaged.

3.09 REPAIRING GEOTEXTILE

A. Repair or replace torn, punctured, flawed, deteriorated, or otherwise damaged geotextile.

B. Repair Procedure:

1. Place patch of undamaged geotextile over damaged area and at least 18 inches in each direction beyond damaged area.
2. Remove interfering material as necessary to expose damaged geotextile for repair.
3. Sew patches or secure them with heat fusion tacking or with pins and washers, as specified above in Article Securing Geotextile, or by other means approved by CONSTRUCTION MANAGER.

3.10 REPLACING CONTAMINATED GEOTEXTILE

A. Protect geotextile from contamination that would interfere, in CONSTRUCTION MANAGER's opinion, with its intended function. Remove and replace contaminated geotextile with clean geotextile.

END OF SECTION

SECTION 31 37 00
RIPRAP

PART 1 GENERAL

1.01 REFERENCES

A. The following is a list of standards that may be referenced in this section:

1. ASTM International (ASTM):
   a. C94, Standard Specification for Ready-Mixed Concrete.
   b. C136, Standard Test Method for Sieve Analysis of Fine and Coarse Aggregates.
   c. C150, Standard Specification for Portland Cement.
   d. C535, Standard Test Method for Resistance to Degradation of Large-Size Coarse Aggregate by Abrasion and Impact in the Los Angeles Machine.
   e. D698, Standard Test Methods for Laboratory Compaction Characteristics of Soil Using Standard Effort (12 400 ft-lbf/ft^3 (600 kN-m/m^3)).
2. American Association of State Highway and Transportation Officials (AASHTO):
   a. M197, Standard Specification for Aluminum Alloy Sheet for Corrugated Aluminum Pipe.
   b. T85, Standard Method of Test for Specific Gravity and Absorption of Coarse Aggregate.
   c. T96, Standard Method of Test for Resistance to Degradation of Small-Size Coarse Aggregate by Abrasion and Impact in the Los Angeles Machine.
   d. T103, Standard Method of Test for Soundness of Aggregates by Freezing and Thawing.
   e. T104, Standard Method of Test for Soundness of Aggregate by Use of Sodium Sulfate or Magnesium Sulfate.

1.02 DEFINITIONS

A. Refer to applicable definitions in Section 31 23 23.15, Trench Backfill.

1.03 SUBMITTALS

A. Action Submittals:

1. Shop Drawings:
   a. Description and location of proposed geotextile and riprap or soil riprap.

b. Description and location of three projects where proposed riprap has been successfully used for minimum 3 years' duration under similar service conditions.

B. Informational Submittals:

1. Certified Test Results:
   a. Riprap:
      1) Gradation.
      2) Abrasion resistance.
      3) Bulk density.
2. Trip tickets showing source, type, and weight of each load of material delivered to Site.

1.04 QUALITY ASSURANCE

A. Riprap Source: Quarry that has produced riprap and has performed satisfactorily on other projects for at least 5 years.

1.05 SCHEDULING AND SEQUENCING

A. Complete subgrade preparation as specified in Section 31 23 13, Subgrade Preparation, and geotextile installation as specified below.

PART 2 PRODUCTS

2.01 RIPRAP

A. Hard and durable quarry stone free from fractures, bedding planes, pronounced weathering, and earth or other adherent coatings.

B. Do not use onsite material as riprap unless onsite material conforms to bulk density, abrasion resistance and other specifications listed below.

C. Minimum Dimension of Individual Pieces: Not less than 1/3 maximum dimension.

D. The Maximum Stone Size: No larger than the thickness of the riprap.

E. Abrasion Resistance: Maximum 35 percent wear as determined in accordance with ASTM C535.

F. Bulk Density: Minimum 165 pounds per dry cubic foot. The specific gravity to be in accordance to the bulk-saturated, surface-dry basis, in accordance with AASHTO T-85.

G. Riprap: Consist of hard, durable, angular stone of approximate cubical shape with a minimum specific gravity of 2.50, a sodium sulfate soundness value less than 10 percent (AASHTO T-104), a Los Angeles abrasion value less than 40 percent (AASHTO T-96), and a freezing and thawing soundness value less than 10 percent (AASHTO T-103). The largest dimension of the stone will not be permitted to be greater than three times the smallest dimension.

H. Provide rock free of calcite intrusions.

I. Conform to the following requirements for size, gradation, and thickness:

CLASSIFICATION AND GRADATION OF ORDINARY RIP RAP			
Rip Rap Designation by Weight	**% Smaller Than Given Size (inches)**	**Intermediate Rock Dimension**	**d50* (inches)**
Type VL	70 – 100	12	
	50 – 70	9	
	35 – 50	6	6**
	2 – 10	2	
Type L	70 – 100	15	
	50 – 70	12	
	35 - 50	9	9**
	2 – 10	3	
Type M	70 – 100	21	
	50 – 70	18	
	35 – 50	12	12
	2 – 10	4	
Type H	70 – 100	30	
	50 – 70	24	
	35 – 50	18	18
	2 – 10	6	

CLASSIFICATION AND GRADATION OF ORDINARY RIP RAP			
Rip Rap Designation by Weight	**% Smaller Than Given Size (inches)**	**Intermediate Rock Dimension**	**d50* (inches)**
Type VH	70 – 100	41	
	50 – 70	33	
	35 – 50	24	24
	2 – 10	9	
* d50 = Mean particle size ** Bury types VL and L with native top soil and revegetate.			

J. Gradation:

1. Ensure that each load of riprap is reasonably well graded from the smallest to the largest size specified. Stones smaller than the 2 to 10 percent size will not be permitted in an amount exceeding 10 percent by weight of each load.
2. Control of gradation by visual inspection. However, in the event the CONSTRUCTION MANAGER determines the riprap to be unacceptable, CONSTRUCTION MANAGER will pick two random truckloads to be dumped and checked for gradation. Provide mechanical equipment and labor needed to assist in checking gradation.

K. Do not use concrete or asphalt rubble. Rounded riprap (river rock) is not acceptable, unless specifically designated on the Drawings.

L. Color: Gray with gray/blue hues or other acceptable colors approved by the CONSTRUCTION MANAGER prior to delivery to the Site. Consistent on the entire project and matching the color of rock in adjacent areas.

M. Bed riprap with geotextile as specified in Section 31 32 19.16, Geotextile.

N. Make excavation for toe walls to the lines of the walls.

O. Soil Riprap: Rock requirements are to comply with riprap requirements as specified above. Use native soil or topsoil mixed with 65 percent riprap and 35 percent soil by volume. Consist of a uniform mixture of soil and riprap without voids.

PART 3 EXECUTION

3.01 PREPARATION

A. Geotextile: See Section 31 32 19.16, Geotextile.

B. Ensure that channel slopes, bottoms, or other areas that are to be protected with riprap or soil riprap are free of brush, trees, stumps, and other objectionable material and graded to a smooth compacted surface.

C. Excavate areas to receive riprap to the subgrade for soil riprap to the specified depth (bedding material is not required for soil riprap).

D. Ensure that subgrade materials are stable. If unsuitable materials are encountered, remove and replace in accordance with Section 31 23 13, Subgrade Preparation, Article 3.04, Correction.

E. Additional compaction will not be required unless specified by CONSTRUCTION MANAGER. When subgrade is built up with embankment material, compact to in accordance with Section 31 23 23.15, Trench Backfill.

F. Geotextile:

1. After an acceptable subgrade is established, immediately place and level the geotextile to the specified elevation.
2. Immediately following the placement of the geotextile, place the riprap.
3. Replace the geotextile if the geotextile is disturbed for any reason.
4. In-place geotextile are not to be contaminated with soils, debris or vegetation before the riprap is placed. If contaminated, remove and replace the geotextile material.

3.02 PLACING RIPRAP

A. Following inspection and acceptance of placement of the geotextile as specified in Section 31 32 19.16, Geotextile, commence riprap placement as follows:

1. Machine Placed Riprap:
   a. Place riprap on the prepared slope or channel bottom areas in a manner that will produce a reasonably well graded mass of stone with the minimum practicable percentage of voids. Machine place riprap, unless otherwise stipulated in the Drawings or Specifications.
   b. It is the intent of these Specifications to produce a fairly compact riprap protection that sizes of material are placed in their proper proportions. Unless otherwise authorized by CONSTRUCTION MANAGER, place the riprap protection in conjunction with the construction of embankment or channel bottom with only sufficient delay in construction of the riprap protection, as may be necessary, to allow for proper construction of the portion of the embankment and channel bottom that is to be protected.
   c. When riprap is placed on slopes, commence placement at the bottom of the slopes working up the slope. Place the riprap in a stepped fashion with the bottom of the uphill riprap below the top

of the downhill riprap by one-half of the height of the riprap minimum.

d. Place the entire mass of riprap on either channel slopes or bottoms so as to be in conformance with the required gradation mixtures and to lines, grades, and thickness shown on the Drawings. Place riprap to its full course thickness at one operation and in such a manner as to avoid displacing the underlying geotextile material. Placing of riprap in layers, or by dumping into chutes, or by similar methods is not permitted.

e. Place and distribute material being used for riprap protection for channel slopes or bottoms such that there are no large accumulations of either the larger or the smaller sizes of stone. Some hand placement may be required to achieve this distribution.

f. The basic procedure results in larger materials flush to the top surface with faces and shapes arranged to minimize voids, and smaller material below and between larger materials. Surface grades to be a plane or as indicated, but projections above or depressions under the finished design grade by more than 10 percent of the rock layer thickness are not allowed. Securely lock smaller rock between the larger stone. It is essential that the material between the larger stones not be loose or easily displaced by flow or by vandalism. Consolidate the stone by the bucket of the backhoe or other means that will cause interlocking of the material. Rock is to be placed in a dewatered condition beginning at the toe of the slope or other lowest point.

g. Maintain the riprap protection until accepted. Replace material displaced for any reason to the lines and grades shown on the Drawings. If the geotextile materials are removed or disturbed, replace such material prior to replacing the displaced riprap.

2. Soil Riprap:

a. Create and mix adjacent stockpiles of riprap and soil at the stockpile location, not at the location where soil riprap is to be placed. Mix 35 percent soil by volume with stockpiled riprap, using additional moisture and control procedures that assure ensure a homogenous mixture; where the soil fills the inherent voids in the riprap without displacing riprap. With prior approval of CONSTRUCTION MANAGER, layering the riprap and soil instead of premixing may be allowed if the native soil is granular.

b. Place a first layer of smaller soil riprap of approximate d_{50} thickness. Then place the top layer with surface rocks that are largely d_{50} or greater, filling voids as necessary with smaller planted riprap. Create a smooth plane as described in Paragraph 3.02.A.1.f.

c. Consolidate the mixture by large vibratory equipment or backhoe bucket to create a tight, dense interlocking mass. Further wet the

soil to encourage void filling with soil. Fill large voids with rock and fill small voids with soil.

d. Do not create excessively thick zones of soil prone to washing away (e.g., no thicknesses greater than 6 inches).

e. For buried soil riprap, cover the top surface with 12 inches of topsoil such that no rock points are protruding. Thoroughly wet the final surface for good compaction. Smooth and compact by vibrating equipment. Then hand rake the surface to receive planting or seeding.

3. Rejection of Work and Materials:

a. Placed riprap that does not conform to this section will be rejected. Remove and re-lay the riprap to conform to said sections.

b. Riprap will be rejected, whether delivered to the Site or placed, that does not conform to this section. Remove rejected riprap from the Site.

END OF SECTION

SECTION 31 41 00
SHORING

PART 1 GENERAL

1.01 REFERENCE SPECIFICATIONS, CODES, AND STANDARDS

A. Occupational Safety and Health Administration (OSHA) Regulations for Underground Construction, 29 CFR Part 1926, Subpart S, Underground Construction, and Subpart P, Excavation.

1.02 SUBMITTALS

A. Informational Submittals:

1. Provide Shaft and Pit Plan for the trenchless construction designed and sealed by a registered Professional Engineer in the State of Colorado. Include as a minimum the following information:
   a. Scaled drawings (plan and section views with dimensions and sizes) showing the proposed shaft and pit elements, including the concrete working slab; adjacent and nearby existing structures and utilities; details of tunneled pipe penetrations; details of pipe penetrations for connection to open cut sections of the pipeline; staging areas for shaft construction operations such as storage, polymer tanks, and/or caisson form storage; and minimum setbacks from the excavation.
   b. Details of procedures for preloading bracing members, if applicable.
   c. Details for locating and protecting existing utilities and structures.
   d. Methods and sequencing of soil and rock excavation and installation of staged excavation support including a schedule with major milestones such as drilling of pilot hole and reaming to full diameter, pouring and excavation of sunken caisson lifts, drilling and backfilling secant piles, pouring of concrete working slab, grouting, etc.
   e. Methods and details of containment, hauling, and disposal of the excavated materials, spoils and other materials used in shaft construction. Written documentation signed by the disposal site owner or manager indicating that the site will accept the muck and that the site is in compliance with applicable local, state, and federal regulations. If a grading permit is required, submit a copy of the approved permit. Submit muck transport plans including route to be used in compliance with Section 01 14 13, Access to Site, and measures to avoid spillage onsite or onto streets and highways. Submit proposed locations of stockpiled excavated material.

f. Procedures for checking and maintaining plumbness of the shaft and ensuring proper elevation is reached.
g. Concrete mix information and placement procedures for the required working slab.
h. Anticipated difficulties and proposed resolutions, including excessive movement of shaft elements, excavation difficulty bottom heave, excessive groundwater inflows, and inability to install the shaft to the required depth.
i. Procedures for backfilling of voids as required to minimize ground movement and protect adjacent property.
j. Procedures for tunnel portal probing and remedial ground improvement.
k. Calculations for the shaft support elements and bracing, indicating it can withstand earth and groundwater pressures, equipment, applicable traffic, and construction loads and other surcharge in accordance with the soil conditions presented in Section 02 40 00, Tunneled Crossings, and other requirements described in the Drawings and Specifications.

1.03 QUALITY ASSURANCE

A. Provide excavation support systems designed by a Professional Engineer registered in the State of Colorado who has a minimum of 5 years of experience in the design of soil and rock retaining structures.

1.04 DESIGN CRITERIA

A. Use the type of shoring and protection methods that meet the specification requirements and that are of a size large enough to facilitate the necessary groundwater control, construction operations, pipeline equipment and operations, tunneling operations, and to accommodate indicated connections to open cut reaches of the project.

B. Provide excavation support systems for areas to support earth pressure, unrelieved hydrostatic pressures, bottom heave, utility loads, equipment, jacking loads, applicable traffic loads, and other loads in such manner as to allow safe construction and to prevent damage to adjacent structures (including existing pipelines and utilities) and injury to workers and the public. In addition, the installation of excavation support systems will not cause a disruption to public convenience or access.

C. Provide excavation support systems to be compatible with the geologic conditions presented in Section 02 40 00, Tunneled Crossings.

D. Do not exceed 50 percent of the ultimate strength of the support material or the maximum design strength of the support, as established by the manufacturer, UPRR, or AREMA, whichever is lower for the maximum loads applied to the support.

E. Provide the support system to protect adjacent utilities from damage and to minimize horizontal and vertical.

F. Provide and install a reinforced concrete invert slab at each excavation for shafts and pits for the trenchless crossings to protect the excavation invert and be capable of supporting such combined dead and live loads as are required.

G. Provide the shaft floors with a sump to remove groundwater, rainwater, runoff, or construction water that enters the shaft. Do not discharge water pumped from within the shaft into storm sewers, sanitary sewers, water bodies, ditches, or streets without an approved discharge permit. Discharge must comply with applicable permit requirements. Water contaminated by polymer or other additives or water that does not comply with the requirements must be transported offsite to an acceptable disposal location.

H. Remove the upper 5 feet of shaft or pit shoring to accommodate construction of connections and backfill sequences.

PART 2 PRODUCTS

2.01 GENERAL

A. Structural Steel: ASTM A36 or better, unless otherwise approved.

PART 3 EXECUTION

3.01 GENERAL

A. Provide, and maintain shoring, sheeting, and bracing as necessary to support the sides of excavations and to prevent detrimental settlement and lateral movement of existing facilities, adjacent property, and completed Work. Provide excavation support systems for the shafts and pits associated with the trenchless crossings to be compatible with the geologic conditions defined in Section 02 40 00, Tunneled Crossings. Caissons and secant pile shafts, if utilized, will include soft eyes.

B. Before beginning construction, adequately protect existing structures, utilities, trees, shrubs, and other existing facilities. Pay for the repair of, or compensation for, damage to existing facilities.

C. Conduct welding to conform to the applicable provisions of ANSI/AWS D1.1.

3.02 SHAFT WALL PENETRATION

A. Demonstrate the stability of the soils at the entry and exit seals prior to initiating penetration through a shaft wall for trenchless crossings as follows:

1. Cut a 2-inch diameter hole through the shoring wall near the center of the bore. Progress to the next demonstration step if no movement of soil or water inflows over 0.5 gpm into the shaft occurs. Seal the demonstration hole and conduct ground improvement if soil or excess water movement into the shaft occurs in accordance with the methods outlined in the submittals. Repeat the first demonstration step.
2. Demonstrate the suitability of the ground improvements after successful completion of the first demonstration step by cutting a 12-inch diameter hole through the shoring wall at the location of previous demonstration hole. Seal the demonstration hole if soil or excess water movement is visible and further improve the ground until no movement of soil or excess water is visible by repeating the demonstration step.

B. Proceed with remainder of the shaft wall penetration after successful completion of the first two demonstration steps, and if the ground improvements are sufficient.

C. Performance of the shaft wall penetrations does not provide relief of the responsibility to prevent loss of ground and settlement.

3.03 TRENCHES

A. For trench excavation at or exceeding 5 feet in depth, provide adequate safety system meeting requirements of applicable local construction safety orders, and OSHA requirements.

B. When personnel are not present within the immediate vicinity of the Work, plate, fence, or barricade open excavations to protect the public and to provide for worker safety.

3.04 REMOVAL OF SUPPORT SYSTEM

A. Do not remove excavation support until support can be removed without damage to existing facilities, completed Work, or adjacent property.

B. As a minimum, remove excavation support between the existing adjacent surface grade and 5 feet below the adjacent surface grade. Prepare as-built Drawings showing location of temporary shoring and bracing that remains in place.

C. Remove excavation support in a manner that will maintain support as excavation is backfilled and will not leave voids in backfill. Perform removal of the support system in a manner that will not disturb the pipeline, the compacted backfill, or adjacent construction or facilities.

D. Fill voids left by shoring system or voids created by the removal of the shoring system with controlled low strength material (CLSM), lean concrete, or cement grout, as approved by the CONSTRUCTION MANAGER to provide soil support between backfill zone and the native soil.

E. Perform sheet piling removal in a manner that will not result in "vibro-consolidation" of sandy or granular material below the excavation that could lead to settlement of the pipeline or other works of construction.

F. Remove the support system from the excavation and from the Site.

END OF SECTION

SECTION 31 60 00
INSTALLATION OF CARRIER PIPE IN EXCAVATION SUPPORT

PART 1 GENERAL

1.01 WORK INCLUDED

A. This section includes requirements for installation of carrier pipe into excavation support at the location shown on the Drawings. For requirements regarding the tunneled installation of the excavation support, see Section 02 40 00, Tunneled Crossings.

1.02 REFERENCES

A. The publications listed below form a part of this Specification to the extent referenced. Where conflicts between these Specifications and the referenced codes and/or standards occur, the more restrictive language governs. The publications are referred to in the text by basic designation only. Where a date is given for referenced standards, use that edition. Where no date is given for referenced standards, use the latest edition available on the date of issue of Contract Documents.

1. Safety Codes: Occupational Safety and Health Administration (OSHA) Regulations and Standards for Underground Construction, 29 CFR Part 1926, Subpart S, Underground Construction and Subpart P, Excavation.

1.03 SUBMITTALS

A. Informational Submittals:

1. Submit the following describing the carrier pipe installation equipment, materials, and construction methods to be employed.
   a. A safety plan for the carrier pipe installation operations including air monitoring equipment and procedures and provisions for lighting, ventilation, and electrical system safeguards. Provide name of Site Safety Representative responsible for implementing safety program. Notify CONSTRUCTION MANAGER if safety plan is the same as for tunneling operations.
   b. Emergency Response Plan in conjunction with the Tunneling Work plan as specified in Section 31 71 31, Tunnel Excavation for rescuing personnel trapped in a shaft, pipe, or tunnel.

2. Submit Carrier Pipe Installation Plan in conjunction with the Tunneling Work plan as specified in Section 31 71 31, Tunnel Excavation. Describe methods, procedures, and equipment for installing carrier pipe inside the excavation support, and methods for backfilling the annular space between the carrier pipe and the excavation support in accordance with Section 02 24 32, Backfill Grouting. Include methods for checking backfill progress. Include welding procedures, methods to place, support, and install carrier pipe, protection of pipe coating and installation of joint sleeves, installation and support of fiber optic conduit. Provide jacking equipment and experience record with these types of machines.

3. Shop Drawings of carrier pipe supports, bulkheads, grout pipes, vent pipes, and drain lines.

1.04 QUALITY CONTROL

A. Carrier Pipe Installation Experience: Same as Section 31 71 31, Tunneled Excavation.

B. For the surveyor responsible for carrier pipe line-and-grade control, use a professional Land Surveyor licensed in the State of Colorado who has prior experience in similar underground projects.

1. See Section 33 05 01.02, Welded Steel Pipe and Fittings—Weld Before Backfill, for carrier pipe line-and-grade tolerances.

1.05 DEFINITIONS

A. Carrier Pipe: Permanent raw water pipeline for operational use that is used to convey flows.

B. Excavation Support: as defined in Section 31 71 31, Tunneled Excavation.

C. Low Density Cellular Concrete (LDCC): as defined in Section 02 24 32, Backfill Grouting.

1.06 BASIS OF DESIGN

A. Install carrier pipe within the horizontal and vertical tolerances as indicated in the Contract Documents incorporating support/insulator dimensions required.

B. Fill voids between the carrier pipe and the excavation support with Low-Density Cellular Concrete (LDCC), in accordance with Section 02 24 32, Backfill Grouting, and as described herein. Install applicable exterior carrier pipe surfaces and interior excavation support surfaces in contact with pressurized backfill grout. Install bulkheads to allow filling of annular space.

PART 2 PRODUCTS (NOT USED)

PART 3 EXECUTION

3.01 GENERAL

A. Do not begin carrier pipe installation until the following is completed:

1. Contact grouting of the excavation support is complete in accordance with Section 31 71 31, Tunneled Excavation.
2. The excavation support has been cleaned of tunneled materials and debris.

B. Do not disturb roadways, adjacent structures, landscaped areas, or existing utilities. Repair damage to original or better condition and to the satisfaction of CONSTRUCTION MANAGER.

3.02 CONTROL OF LINE AND GRADE

A. Where the carrier pipe installation exceeds the specified tolerances, correct the installation, including, if necessary, redesign of the pipe or structures. Manufacture carrier pipe supports required for carrier pipe installation within excavation support satisfying allowable tolerance requirements specified herein.

3.03 INSTALLATION OF CARRIER PIPE

A. Pipe Installation: Install carrier pipe as shown on the Drawings in accordance with specified tolerances and approved submittals. Remove loose soil, grout spillage, and debris from excavation support. Provide carrier pipe supports, as required, to prevent flotation, movement, or damage to the pipe during pipe installation and backfill placement. Support every individual carrier pipe sections by at least two sets of spacers. Install carrier pipe without sliding or dragging it on the ground or in the excavation support in a manner that could damage the pipe or coatings.

B. Move each pipe section into the tunnel longitudinally. Block each section of pipe in the tunnel in accordance with specified line and grade tolerances.

C. Repair damage to the pipe during transport and installation.

D. Install to line and grade.

E. Secure pipe section by tie downs, blocking, or by other means, to prevent flotation, settlement, or lateral or axial movement of the pipe during placement of backfill around pipe.

F. Install fiber optic conduit as shown on the Drawings.

G. Electrical Isolation: Verify that the excavation support and carrier pipe are electrically isolated prior to backfilling and again after backfilling is complete. If electrical isolation is not achieved, perform the necessary work, including, but not limited to, removing and replacing the carrier pipe within the excavation support until isolation is achieved.

H. Testing of Carrier Pipe: Complete hydrostatic testing of the carrier pipe prior to the backfilling of the annular space between the excavation support and carrier pipe. Perform pressure testing in accordance with Section 33 05 01.02, Welded Steel Pipe and Fittings Weld Before Backfill. Correct leakage found during testing prior to proceeding with the filling of the annular space. In addition, provide and select location of test heads for each end of the carrier pipe outside tunneled crossings. Show test head locations on Shop Drawings.

I. Backfill annular space between excavation support and carrier pipe with LDCC in accordance with Section 02 24 32, Backfill Grouting.

3.04 SAFETY

A. Be responsible for safety at the Site. Perform Work in accordance with the current applicable regulations of the federal, state, and local agencies. In the event of conflict, comply with the more restrictive applicable requirement.

B. Gasoline-powered equipment is not permitted in shafts and tunnel. Diesel, electrical, hydraulic, and air-powered equipment is acceptable, subject to applicable local, state, and federal regulations.

C. Ensure the safety of the Work, employees on Site, and the public.

D. Furnish and operate a temporary ventilation system in accordance with applicable safety requirements when personnel are underground. Perform required air and gas monitoring. Provide ventilation system with a sufficient supply of fresh air and maintain an atmosphere free of toxic or flammable gasses in underground Work areas.

E. Perform Work in accordance with current applicable regulations and safety requirements of the federal, state, and local agencies. Comply with applicable provisions of 29 CFR Part 1926, Subpart S, Underground Construction and Subpart P, Excavations, by OSHA.

F. Develop an emergency response plan for rescuing personnel trapped underground in a shaft excavation or pipe if personnel will enter the pipe during construction. Keep equipment required for emergency response in accordance with the agency having jurisdiction on Site.

END OF SECTION

SECTION 31 71 31
TUNNEL EXCAVATION

PART 1 GENERAL

1.01 WORK INCLUDED

A. This section specifies the excavation of the tunneled crossing of the Union Pacific Railroad (UPRR) tracks using a road header or other mechanical excavation methods and installation of an excavation support, consisting of galvanized corrugated tunnel liner plate designed in accordance with UPRR and AREMA standards.

B. The tunnel excavation will consist of driving the tunnel from Sta. 124+00 to the riser shaft at Station 127+09.

C. Drill and blast excavation is not allowed.

D. The excavation methods shall be compatible with the excavation support system designed to allow installation of 66-inch I.D. welded steel pipe in both the tunnel and the riser shaft and an associated 90-degree elbow at the base of the riser shaft.

1.02 REFERENCE SPECIFICATIONS, CODES, AND STANDARDS

A. The publications listed below form a part of this specification to the extent referenced. Where conflicts between these specifications and the referenced specification, code, or standard occur, the more restrictive specification shall govern. The publications are referenced in the text by basic designation only. Where a date is given for referenced standards, that edition shall be used. Where no date is given for referenced standards, use the latest edition available on the date of issue of Contract Documents.

1. Occupational Safety and Health Administration (OSHA) Regulations and Standards for Underground Construction, 29 CFR Part 1926, Subpart S, Underground Construction, and Subpart P, Excavations.

1.03 SUBMITTALS

A. Informational Submittals:

1. Qualifications: Submit the name of the CONTRACTOR or subcontractor that will perform the tunneling work and submit qualifications and detailed qualifying project experience for the (sub)CONTRACTOR, (sub)CONTRACTOR'S superintendent, and (sub)CONTRACTOR'S foreman that meet the requirements of Article Quality Assurance. In addition, submit names and training/qualifications

of personnel that will perform air quality monitoring, the Site Safety Representative, and the professional Land Surveyor.

2. Pre- and Post-Construction Surveys: Submit pre- and post-construction surveys including photographs, videos, field notes, written records, and sketches in accordance with Section 01 32 34, Photographic and Video Documentation.
3. Quality Control Methods: Submit a description of the quality control methods proposed for the tunneling operation within 14 days of issuance of Notice to Proceed in conjunction with the Tunneling Work Plan. Include the following:
    a. Supervision. Supervisory control to ensure that Work is performed in accordance with the Drawings and Specifications, and Tunneling Work Plan and Drawings.
    b. Line and grade. Procedures for surveying, controlling and checking line and grade, including field forms.
    c. Tunneling Observation and Monitoring. Procedures for preparing and submitting daily logs of tunneling operations, including field forms.
    d. Products and Materials. A plan for testing and submittal of test results to demonstrate compliance with the Specifications and CONTRACTOR's criteria for permanent products, materials, and installations. Identify applicable standards and procedures for testing and acceptance.
4. Calculations: Submit calculations in a neat, legible format. Ensure that the assumptions used in calculations are consistent with information provided in Section 02 40 00, Tunneled Crossings. Provide calculations prepared by and stamped and signed by a Professional Engineer licensed in the State of Colorado.
    a. Submit design calculations demonstrating that the proposed liner plate is capable of supporting the maximum stresses to be imposed during installation and final operation with the required factor of safety. Take into account earth and hydrostatic loads, swell pressures, jacking forces (if applicable), external loads such as live loads due to traffic and trains, and other loads that may be reasonably anticipated. Show and describe loads.
    b. Submit contact grout pressure calculations to provide sufficient pressure to fill overcut and voids without excessive ground heave or settlement or damage to the excavation support.
5. Safety Plan: A Safety Plan for the tunneling operations including air monitoring equipment and procedures, and provisions for lighting, ventilation, and electrical system safeguards. The plan should also include at a minimum:
    a. Protection against rock instability.
    b. Safety for tunnel and shaft access and exit including ladders, stairs, walkways, and hoists.
    c. Protection against mechanical and hydraulic equipment operations, and for lifting and hoisting equipment and material.

d. Monitoring for hazardous gases.
e. Means for emergency evacuation and self-rescue.
f. Protection of entrance including barriers to prevent accidental or unauthorized entry, and protection from falling objects.

6. Code of safe work practices and emergency plan as required by OSHA.
7. Schedule: Provide a schedule for tunneling work, identifying major construction activities as independent items within 14 days of issuance of Notice to Proceed in conjunction with the Tunneling Work Plan. Include, as a minimum, the following activities: mobilization, "One call" utility locate requests and visual confirmation of crossing utilities and parallel utilities within 20 feet laterally of the bore centerline, shaft/pit/portal excavation and support, concrete working slab construction, equipment setup, ground improvement, tunneling, contact grouting, installation of the carrier pipe inside tunnel, annular space grouting, shaft backfill, Site restoration, cleanup, and demobilization. Include the work hours and workdays for each activity, and a written description of the construction activities. The schedule will be reviewed by the CONSTRUCTION MANAGER. Update every 2 weeks, or more frequently if requested by the CONSTRUCTION MANAGER.
8. Daily Records: Submit the following daily records by noon on the day following the shift for which the data or records were taken.
   a. Number and classification of crew members and equipment used.
   b. Excavation Method and Progress: For each shift, include the beginning and ending time and station of the tunnel face for each major division of work and each type of excavation. Include the time spent installing excavation support, and advancing services.
   c. Ground type and ground behavior.
   d. Type of excavation support installed.
   e. Deformations or distress of the excavation support system.
   f. Advance probing or contact grouting completed, including locations and material quantities.
   g. Quantity of water inflows.
   h. Environmental conditions in the vicinity of the heading, including temperature and air quality, as required by OSHA.
   i. Time, duration, and operations affected by down time due to interruptions or delays to tunneling progress. Describe, in detail, the nature and cause of the down time. Account for shift time, including periods of work and down time.
   j. Significant information regarding muck disposal operations.
   k. Unusual observations, including safety-related issues, and instability.
   l. Results of inspections.
   m. Survey Measurements: Survey measurements of excavation support alignment.
9. Certificates of compliance for materials permanently incorporated into the work.

10. Contact Grout Reports and Records: Maintain and submit daily logs of grouting operations, including grouting locations, pressures, volumes, and grout mix pumped, and time of pumping. Note problems or unusual observations on logs.

B. Action Submittals:

1. Tunneling Work Plan:
   a. Submit Tunneling Work Plan to the CONSTRUCTION MANAGER within 14 days of issuance of Notice to Proceed.
   b. Provide CONTRACTOR's construction drawings and written description identifying details of the proposed method of construction and the sequence of operations to be performed during construction, as required by the method of tunneling. Sufficiently detail the drawings and descriptions to demonstrate whether the proposed materials and procedures will meet the requirements of this Section. Include the following items, at a minimum, in the Tunneling Work Plan, (including drawings):
      1) Arrangement drawings and technical specifications of the road header, tunnel excavator, and mucking and muck conveyance equipment along with experience record with these types of machines.
      2) Methods for controlling and verifying excavated dimensions, line, and grade, including tolerances for excavation and excavation support so that the final pipe is installed to specified tolerances with minimum clearances.
      3) Methods for installation of excavation support including maximum distance of unsupported tunnel excavation.
      4) Method and details of spoil removal, including equipment type and numbers, methods to monitor volume of spoils removed, processing, and disposal procedures and locations.
      5) Proposed methods and equipment for handling, transporting, erecting, and maintaining excavation support.
      6) Techniques to be used for contact grouting including equipment, pumping and injection procedures, pressure grout types, and mixtures, in accordance with the manufacturer's recommendations.
      7) Product data or mix designs for rock sealant or shotcrete used to protect excavated surfaces from degradation due to exposure to the atmosphere or water.
      8) Plans for storage and handling of liner plate.
   c. Abandonment Contingency Plan: Prepare and obtain approval Abandonment-Recovery Contingency Plan as required in Section 02 40 00, Tunneled Crossings.
   d. Contact Grout Work Plan:
      1) Submit Contact Grout Work Plan, for each type of contact grouting required, including contact grouting methods and

details of equipment, grouting procedures and sequences, injection pressures, monitoring and recording equipment, pressure gauge calibration data, methods of controlling grout pressure, method of transporting grouting equipment and materials within the excavation support, and provisions to protect interior of pipe and shaft supports.

2) Submit details of grout mix proportions, admixtures, including manufacturers' literature, and laboratory test data verifying the strength of the proposed grout mix.

1.04 DEFINITIONS

A. Road Header Excavation: Excavation using a boom-mounted rotary milling head with drag picks. Road header machines generally are track-mounted and include gathering arms and a conveyor system to move muck from the face to a loading point at the rear of the machine. The road header can cut a variety of cross-sections and dimensions.

B. Excavation Support: Ground support consisting of galvanized and corrugated steel tunnel liner plate placed during or immediately after excavation to stabilize the ground until the final support is installed. Excavation support serves as a casing beneath the UPRR tracks.

C. Final Support: Welded steel carrier pipe, backfill cellular concrete, excavation support, and contact grout.

D. Tunnel Face: The vertical (or near vertical) rock face at the end of the tunnel heading.

E. Carrier Pipe: Permanent pipe for operational use that is used to convey flows.

F. Grout Port: A port located within the liner plate. During tunneling, seal the port with a threaded plug. During contact grouting, fit the port with a one-way valve for injection of grout into the annular space between the excavation support and the ground.

1.05 DESIGN CRITERIA

A. Tunneling Equipment: Select tunneling equipment suitable for and capable of efficiently advancing through the geologic conditions defined in Section 02 40 00, Tunneled Crossings, and the geologic conditions anticipated by the CONTRACTOR.

B. Excavation Support:

1. Design excavation support for identified loads, installation loads, contact grouting pressures, jacking loads (if applicable), and acceptable fabrication tolerances in accordance with the requirements of UPRR and

AREMA. Do not exceed 50 percent of the ultimate compressive strength of the excavation support material or the maximum design strength of the excavation support, as established by the manufacturer, UPRR, or AREMA, whichever is lower for the maximum loads applied to the excavation support. Include grout ports as shown in the Drawings.

2. Design excavation support in consideration of the geologic conditions defined in Section 02 40 00, Tunneled Crossings, and the geologic conditions anticipated by the CONTRACTOR.

1.06 QUALITY CONTROL

A. Grout Strength Tests: Prepare samples for 24-hour and 28-day compressive strength tests according to ASTM C31 for cylinders or ASTM C109 for cubes. Prepare cylinder molds at least 2 inches in diameter and 4 inches long. Prepare grout cubes either 2 inches or 50 millimeters square. Test samples according to ASTM C39 or C109 as applicable. Take grout for the cylinders or cubes from the nozzle of the contact grout injection line. Provide at least one set of four samples for each 100 cubic feet of grout injected but not less than one set for each grouting shift, unless directed otherwise by the CONSTRUCTION MANAGER.

1.07 QUALITY ASSURANCE

A. Perform tunneling work by an experienced CONTRACTOR or subcontractor who has at least 5 years of experience in performing tunneling work in similar rock utilizing similar techniques and has completed at least three similar projects involving at least a 500-foot tunnel on each project.

B. Provide a Superintendent or subcontractor Superintendent with at least 5 years of experience (within last 15 years) in responsible charge of the overall tunneling operation including experience in similar rock formations using the tunnel excavation methods proposed by the (sub)CONTRACTOR. Shift supervisors shall have at least 3 years recent experience (within last 10 years) in responsible charge of a tunneling shift in similar rock formations using the tunnel excavation methods proposed by the CONTRACTOR or subcontractor. Provide a Site Safety Representative and personnel responsible for air quality monitoring experienced in tunnel construction and having current certification by OSHA.

C. Tolerances for line and grade of the final support are specified elsewhere. Appropriate allowances shall be made for CONTRACTOR's methods, and perform tunnel excavation such that these tolerances are not exceeded. Tolerances for excavation and installation of excavation support shall be shown on the CONTRACTOR's working drawings.

D. Excavate the tunnel to achieve the required minimum clearances for the final support system as indicated on the Drawings. Provisions for additional excavation beyond these minimum clearance lines may be necessary in order

to accommodate the CONTRACTOR's means and methods of operation. Verify with CONSTRUCTION MANAGER that additional excavation will not impact permit requirements. Comply with permit requirements. In considering the initial excavation lines, the CONTRACTOR shall make adequate allowance for:

1. Tolerances for the lines and grades of the tunnel as excavated.
2. Excavation support and tolerances for installation.
3. Excavation methods, especially clearances required for loading and hauling tunnel muck and for grouting.
4. The selected lengths and methods of installing the tunnel support pipe sections and methods of delivering and placing backfill cellular concrete in the tunnel.
5. Clearance required for pipe stiffeners and other pipe appurtenances.
6. Clearances required for installation of the riser elbow and associated riser shaft construction operations, including, but not limited to mucking of the riser shaft excavation.

E. Provide a professional Land Surveyor licensed in the State of Colorado who has prior experience in similar underground projects to be responsible for line-and-grade control.

F. Provide at least 72 hours advance written notice to CONSTRUCTION MANAGER of the start of the tunneling. Notify immediately the CONSTRUCTION MANAGER, in writing, when problems are encountered with equipment or materials, or if the conditions encountered are materially and significantly different than those represented within the Contract Documents. Perform Work in the presence of the CONSTRUCTION MANAGER, unless the CONSTRUCTION MANAGER grants prior written approval to perform such Work in CONSTRUCTION MANAGER's absence.

G. Allow access to the CONSTRUCTION MANAGER and furnish necessary assistance and cooperation to aid the CONSTRUCTION MANAGER in observations, measurements, data, and sample collection, including, but not limited to the following:

1. Allow CONSTRUCTION MANAGER full access to the shafts/pits prior to, during, and following tunneling operations. Access includes, but is not to be limited to, visual inspection of installed excavation support and verification of line and grade. Provide safe access in accordance with safety regulations.
2. Allow CONSTRUCTION MANAGER full access to the spoil material. Allow the CONSTRUCTION MANAGER to collect soil samples from the spoil removal system a minimum of once per installed set, or every 10 feet, whichever is more often, and when changes in soil conditions or obstructions are apparent or suspected.

1.08 SAFETY

A. Be responsible for safety on the Site. Utilize methods of construction to ensure the safety of the Work, personnel onsite, and the public. Perform Work in accordance with current applicable regulations and safety requirements of the federal, state, and local agencies. Comply with applicable provisions of 29 CFR Part 1926, Subpart S, Underground Construction and Subpart P, Excavations, by OSHA.

B. No gasoline powered equipment is permitted in shafts, pits, and tunnel. Diesel, electrical, hydraulic, and air powered equipment is acceptable, subject to applicable local, state, and federal regulations.

C. Furnish and operate a temporary ventilation system in accordance with applicable safety requirements when personnel are in the shaft or in the tunnel. Perform required air and gas monitoring. Provide a ventilation system to provide a sufficient supply of fresh air and maintain an atmosphere free of toxic or flammable gasses in underground Work areas.

PART 2 PRODUCTS

2.01 MATERIALS

A. Carrier Pipe: Pipe used as a carrier pipe and final support, to be installed inside the excavation support, shall conform to Section 33 05 01.02, Welded Steel Pipe and Fittings—Weld Before Backfill.

B. Tunnel Liner Plate:

1. Tolerances:
   a. Variation in thickness of liner plates: Maximum, plus or minus 0.01 inch.
   b. Fabricate similar segments to be interchangeable in individual rings in similar segments of other rings.
   c. Space holes accurately so two rings may be bolted in any relative position with same size bolts in every bolt hole.
   d. Tolerance of diameter to bolt holes: Plus or minus 0.02 inch from specified diameter.
   e. Replace segments not complying with tolerances indicated.
2. Steel Liner Skin: ASTM A569.
   a. Use liner plate steel with minimum mechanical properties of flat plate before cold forming:
      1) Tensile Strength: 42,000 psi.
      2) Yield Strength: 28,000 psi.
      3) Elongation, 2 Inches: 30 percent.
      4) Minimum liner plate thickness shown on Drawings.

b. If tunnel method of construction includes procedure to use installed liner plate for jacking purposes, increase liner plate thickness to withstand jacking force to be imposed.
c. Use corrugated liner plates of four-flange type.
d. Manufacturers:
1) DSI-American Commercial, Inc.
2) Contech Construction Products, Inc.

3. Coatings:
a. Liner Plate: Hot dipped galvanized following ASTM A123.
b. Bolts and Nuts: Galvanized following ASTM A153. Not less than 1/2-inch in diameter.
c. Protect coatings from damage during storage and transportation to site.

4. Bolts and Nuts: ASTM A307, Grade A, with rolled threads on bolts.
5. Grout Holes for Each Ring of Liner Plate: Unless otherwise indicated on Drawings, use two minimum per ring.

C. Contact Grout:

1. Cement: Cement shall be Type II or Type V portland cement conforming to ASTM C150. Type II cement shall meet Table 4 false set requirements of ASTM C150.
2. Bentonite: Bentonite shall be a commercially processed powdered bentonite, Wyoming type, such as Baroid, Imacco-gel, and Black Hills.
3. Sand: Conform to ASTM C144 except where modified in the following subparagraphs.
a. Fineness modulus: Between 1.50 and 2.00.
b. Grading Requirements:

Sieve Sizes	Percentage Passing by Weight
No. 8	100
No. 16	95 - 100
No. 30	60 - 85
No. 50	20 - 50
No. 10	10 - 30
No. 200	0 - 5

4. Fluidifier: Fluidifiers shall hold the solid constituents of the grout in colloidal suspension, be compatible with the cement and water used in the grouting work, and comply with the requirements of ASTM C937.
5. Admixtures: Other admixtures may be used subject to the written approval of the ENGINEER to improve the pumpability, to control set time, to hold sand in suspension, and to prevent segregation and bleeding.

6. Compressive Strength: The grout shall reach a minimum strength of 10 psi in 24 hours, 50 psi in 28 days.

2.02 ROAD HEADER

A. The machine shall be a new or used machine prepared and reconditioned for this job, capable of the following minimum performance requirements:

1. The road header cutter head shall be designed and manufactured for efficiently excavating the tunnel in the prevailing geologic formations and groundwater conditions.
2. The road header shall be capable of excavating a tunnel with the variety of intact rock strengths indicated in Section 02 40 00, Tunneled Crossings. The CONTRACTOR shall recognize the range of ground conditions that will be encountered during excavation of the tunnel and provide design and features on the road header to enable efficient excavation of the full range of conditions.
3. The selected machine shall allow installation of the excavation support elements at the range of spacings required for the excavation support system selected by the CONTRACTOR.
4. The road header and associated equipment shall be designed and manufactured with waterproof components capable of operating under the water inflows indicated in the contract documents.
5. The muck handling system shall be designed for a wet environment.
6. Maintain onsite an inventory of spare parts recommended by the road header manufacturer to ensure continued availability of the machine.
7. The road header and supporting equipment shall be equipped in accordance with applicable OSHA requirements for underground construction equipment.

2.03 MUCK HANDLING EQUIPMENT

A. A system shall be provided for handling and transport of moist and slick tunnel muck, through/past the road header and backup systems to the portal.

B. To protect the invert from degradation from traffic, the invert shall be protected with a pre-cast, cast-in-place, concrete, or shotcrete invert slab.

C. For muck train systems, maintain track to allow for safe operation of trains. The heads of rails shall not be submerged under water or covered with tunnel muck or other debris. Upon completion of construction of the tunnel, remove such railroad ties and ballast prior to complete of the work. Rail may be left in place, provided the minimum clearance dimensions indicated on the drawings are maintained.

D. For conveyance systems, design the muck hauling system(s) to transport muck to the construction portal with a minimum of spillage.

PART 3 EXECUTION

3.01 GENERAL REQUIREMENTS

A. Do not begin tunneling until the following tasks have been completed:

1. Required Submittals have been provided, reviewed, and approved.
2. Shaft/pit portal excavations and support systems have been completed in accordance with Contract requirements. Locations and elevations of shafts/pits have been surveyed to confirm that Work can be completed in accordance with alignment and grade shown on Drawings.
3. A startup inspection of mechanical and hydraulic systems associated with the tunneling operations has been completed. Test the system to ensure that the equipment is functioning properly.
4. Site Safety Representative has prepared a code of safe practices and an emergency plan in accordance with OSHA and other applicable requirements. Provide the CONSTRUCTION MANAGER with a copy of each prior to starting tunneling. Hold safety meetings and provide safety instruction for new employees as required by OSHA. Conduct a pre-construction safety conference in accordance with OSHA requirements. Arrange this conference and inform the CONSTRUCTION MANAGER of the time and place of the conference at least 7 days in advance.

B. Properly manage and dispose of groundwater and surface water inflows to the shafts in conformance with approved CDPHE Dewatering and Construction Stormwater Discharge Permits. Do not discharge groundwater inflows into storm sewers, sanitary sewers, drainage ditches, water bodies, or streets without an approved discharge permit.

C. Conduct operations such that trucks and other vehicles do not interfere with traffic or create a mud, dust, or noise nuisance in the streets and to adjacent properties. Promptly clean up, remove, and dispose of mud and spoils spillage, and material discharges.

D. Conduct Work so as not to disturb roadways, adjacent structures, landscaped areas, or existing utilities. Repair damage immediately to original or better condition and to the satisfaction of CONSTRUCTION MANAGER.

E. Operate with a full crew 24 hours a day whenever there is a condition that is likely to endanger the stability of the excavation or adjacent structures, including weekends and holidays, without interruption, until those conditions no longer jeopardize stability.

3.02 EXCAVATION

A. Excavate the tunnel to permit the installation of the excavation support system to the lines and grades shown on the drawings. Subject to the minimum clearance dimensions provided herein, shown on the Drawings, and as required for construction of the carrier pipe, riser shaft, riser pipe, and associated elbow determine the dimensions of the excavation to permit construction of the final support to the tolerances, minimum thicknesses, and minimum clearances indicated in the contract documents, and with the consideration of proposed construction methods, tolerances, and the requirement to protect the invert during mucking operations.

B. No blasting will be permitted.

C. Prevent slaking and deterioration of excavated shale bedrock through installation of the excavation support or control with shotcrete or polymer coating. Initial application should be within 8 hours of exposure.

3.03 EXCAVATION SUPPORT

A. Install excavation support within 8 hours of first exposure, one shift, or a maximum unsupported tunnel length of 4 feet (whichever is less or as required to provide stability and safety) in accordance with manufacturer's recommendations and AREMA and UPRR requirements to provide a safe and stable opening through which to install the carrier pipe.

3.04 CONTROL OF WATER

A. Drain tunnel using gravity drainage and pumping, as necessary, to provide safe working conditions. Provide equipment, materials, and power, including suitable spares and a backup power supply, to handle water and to prevent damage to the work.

3.05 SCALING AND CLEANING

A. As soon as practical after excavation, and prior to installing excavation support, inspect the freshly excavated rock surface and scale loose material.

B. Remove unexcavated rock or support projecting inside the tunneled diameter necessary for installation of the excavation support before the excavation support is placed. Remove loose material on the exposed rock surfaces to expose clean undisturbed surfaces before the concrete is placed.

3.06 TUNNEL SURVEY

A. During excavation and prior to the installation of the final support, maintain survey station markers:

1. To a level of accuracy of 0.01 foot.
2. At intervals of not more than 50 feet.
3. At each change in horizontal and vertical direction.

B. During excavation and prior to installation of the final support, provide simple painted intermediate tunnel station markers:

1. At 20-foot stations.
2. Minimum lettering heights of 8 inches.
3. Color to contrast to background.
4. Locate markers on the same side of the tunnel throughout its length and with respect to the centerline of the tunnel.
5. Set markers at approximately eye level near the spring line and keep unobstructed by utilities.

C. Access and logistical support shall be provided to assist the CONSTRUCTION MANAGER in verifying the CONTRACTOR's survey.

D. At the completion of excavation of the tunnel and prior to placement of the carrier pipe, perform a detailed profile survey of the tunnel excavation to determine presence of tights and to allow planning of the final support placement to ensure that final support tolerances and minimum clearances are maintained.

E. Correct the installation, including necessary redesign of the pipeline or structures and acquisition of necessary easements, if the excavation support installation does not meet the specified tolerance.

3.07 GEOLOGY MAPPING

A. Provide the CONSTRUCTION MANAGER with free access to the heading and sidewalls of the tunnel to perform mapping of the geology exposed in the excavated surfaces of the tunnel. Coordinate with and provide assistance to the CONSTRUCTION MANAGER to enable continuous geologic mapping of the exposed rock surface expeditiously.

B. Provide access to rock surfaces in a timely manner where rock surfaces will be subsequently covered by excavation support elements such as liner plate, shotcrete, lagging, or cribbing.

3.08 ENLARGEMENTS FOR CONTRACTOR'S CONVENIENCE

A. Support tunnel enlargements made for construction purposes during the excavation of the tunnel.

B. Fill tunnel enlargements and overbreak made for construction purposes during the excavation of the tunnel with LDCC.

3.09 CONTACT GROUTING EQUIPMENT

A. Provide equipment for mixing and injecting grout to satisfactorily mix and agitate the grout and force it into the grout holes, in a continuous flow at the desired pressure. Provide pumps capable of continuously developing a sustained pressure of 15 pounds per square inch at the grout hole connection.

B. Provide two pressure gauges, one at the grout pump and one at the collar of each hole being grouted. Check the accuracy of the gauges periodically with an accurately calibrated pressure gauge. Make available a minimum of two spare pressure gauges on site.

C. Provide the grouting equipment with a meter to determine the volume of grout injected. Calibrate the meter in cubic feet to the nearest one-tenth of a cubic foot.

D. Maintain the grouting equipment in satisfactory operating condition throughout the course of the Work to ensure continuous and efficient performance during grouting operations.

E. Provide suitable stop valves at the collar of each hole for use in maintaining pressure as required until the grout has set.

F. Provide grout hoses with an inside diameter not less than 1-1/4 inches nor greater than 2 inches and capable of withstanding the maximum water and grout pressures to be used.

3.10 MIXING AND INJECTION OF CONTACT GROUT

A. Provide materials free of lumps when put into the mixer. Constantly agitate the grout mix. Install grout that flows unimpeded and completely fill voids. Waste grout not injected after 90 minutes of mixing.

B. Operate and control the grouting process so that the grout will be delivered uniformly and steadily. The locations of contact grout holes in the pipe are shown on the Drawings. Drilling grout holes through pipe will not be permitted.

C. Recirculate grout mixes when new mix is batched or after adding water, fluidifier, or sand to mix. Recirculate mix for at least 2 minutes prior to pumping grout into grout hole.

D. Grouting will be considered completed when less than one cubic foot of grout of the accepted mix and consistency can be pumped in 5 minutes under the specified maximum pressure. After the grouting is finished, close the valve before the grout header is removed and remain closed until grout has set.

E. The maximum sustained grouting pressure shall be 15 pounds per square inch (psi) or 1/2 psi per foot of earth cover, whichever is less, at the grout hole collar connection unless otherwise approved in writing by the CONSTRUCTION MANAGER.

3.11 CONTACT GROUTING OF EXCAVATION SUPPORT

A. Commence contact grouting outside of the excavation support within 24 hours following the completion of each reach of 20 feet in length. Conduct grouting operations continuously until completed.

B. Provide excavation support with manufacturer-installed contact grout ports. Drilling grout holes through installed support will not be permitted. Provide grout ports threaded to accept valve fittings and plugs.

C. Attempt to hook up and pump grout at every tunneled pipe grout port or coupling unless approval is granted by the CONSTRUCTION MANAGER in writing to omit grouting of selected ports.

D. Inject grout through the grout connections in such a manner as to completely fill voids outside the excavation support resulting from, or encountered during, tunneling operations. Control grout pressure so as to avoid damaging the support, and to avoid movement of the surrounding ground or improvements.

E. Grout to generally progress sequentially in a constant upgradient direction from one grout port to the next grout port in the sequence indicated in the approved submittals.

F. During the grouting operations, clean and make ready for grouting the sufficient contact grout ports ahead of the port to be grouted. Attach valves or other suitable devices and place in the fully open position on ungrouted ports within the maximum grout communication distance.

G. For holes ahead of the grouting operation, with a valve attached, and the valve in the open position, such hole shall be considered grouted if grout issues forth of the same consistency and color, and at the same rate as that being pumped. Replace grout plugs in pipe at the completion of grouting.

H. Seal pipe grout fittings with screw type plugs upon completion of grouting.

3.12 INSTALLATION OF CARRIER PIPE

A. Installation of carrier pipe within the excavation support and backfilling of annular space between the excavation support and carrier shall be in accordance with Section 31 60 00, Installation of Carrier Pipe in Excavation Support, and Section 02 24 32, Backfill Grouting.

3.13 CLEANUP

A. After completion of tunneling and carrier pipe installation, remove construction debris, spoils, oil, grease, and other materials from the tunnel, shafts/pits, and Work areas.

END OF SECTION

SECTION 31 75 28
SHAFT RISER

PART 1 GENERAL

1.01 WORK INCLUDED

A. Furnish labor, equipment, and materials necessary for bored installation of a welded steel riser pipe, and other associated work.

B. Riser pipe construction performed through bored installation of the riser shaft shall consist of boring the shaft, installing a welded steel riser pipe and grouting in the steel riser pipe at the location and to the depths as indicated on the Drawings. The shaft bore may be accomplished by the raised bore drilling, blind drilling or other drilling methods compatible with the tunneling method for the crossing and as proposed by CONTRACTOR and approved by the CONSTRUCTION MANAGER.

C. Drill and blast excavation is not allowed.

1.02 REFERENCE SPECIFICATIONS, CODES, AND STANDARDS

A. The publications listed below form a part of this specification to the extent referenced. Where conflicts between these specifications and the referenced specification, code, or standard occur, the more restrictive specification shall govern. The publications are referenced in the text by basic designation only. Where a date is given for referenced standards, that edition shall be used. Where no date is given for referenced standards, the latest edition available on the date of issue of Contract Documents shall be used.

1. Occupational Safety and Health Administration (OSHA) Regulations and Standards for Underground Construction, 29 CFR Part 1926, Subpart S, Underground Construction, and Subpart P, Excavations.

1.03 SUBMITTALS

A. Informational Submittals:

1. Qualifications: Submit the name of the subcontractor, if subcontractor is used, that will perform the shaft boring work and submit qualifications and detailed qualifying project experience for the subcontractor's, if used, superintendent, foreman, and drill operator(s) that meet the requirements of Article Quality Assurance. In addition, submit names and training/qualifications of personnel that will perform air quality monitoring, the Site Safety Representative, and the professional Land Surveyor.

2. Describe methods, procedures, and equipment for installing riser pipe inside the riser shaft, and methods for backfilling the annular space between the riser pipe and the riser shaft in accordance with Section 02 24 32, Backfill Grouting. Include methods for checking backfill progress.
3. Shop Drawings of riser pipe supports, bulkheads, and grout pipes.
4. Quality Control Methods: Submit a description of the quality control methods proposed for the shaft drilling operation no later than 60 days after Notice to Proceed. The Submittal shall include:
    a. Supervision. Supervisory control to ensure that Work is performed in accordance with the Drawings and Specifications, and Shaft Riser Work Plan and drawings.
    b. Plumbness and alignment. Procedures for surveying, controlling and checking plumbness and alignment, including field forms.
    c. Boring Observation and Monitoring. Procedures for preparing and submitting daily logs of boring operations, including field forms.
    d. Products and Materials. A plan for testing and submittal of test results to demonstrate compliance with the Specifications and CONTRACTOR's criteria for permanent products, materials, and installations. The plan shall identify applicable standards and procedures for testing and acceptance.
5. Safety Plan: A Safety Plan for the boring operations including air monitoring equipment and procedures, and provisions for lighting, ventilation, and electrical system safeguards. The plan should also include at a minimum:
    a. Protection against rock instability.
    b. Safety for tunnel and shaft access and exit including ladders, stairs, walkways, and hoists.
    c. Protection against mechanical and hydraulic equipment operations, and for lifting and hoisting equipment and material.
    d. Monitoring for hazardous gases.
    e. Means for emergency evacuation and self-rescue.
    f. Protection of shaft including barriers, handrails, accidental or unauthorized entry, and falling objects.
6. Within 60 days after Notice to Proceed, submit a Work Plan complete with Drawings and design data showing methods and equipment proposed for boring the shaft, installing the riser pipe, and backfilling the annular space around the riser pipe. Include the proposed methods for surveying the pilot bore as well as surveying the riser pipe, in place. Include proposed methods for correcting pilot bore alignment tolerance that does not meet the tolerance in this specification and riser pipe alignment that does not meet this specification.
7. Daily Records: The following daily records shall be submitted to the CONSTRUCTION MANAGER by noon on the day following the shift for which the data or records were taken. Include equipment used, start

and stop times, progress of the work, testing results, delays and problems. The reports shall include but not be limited to the activities listed below:

a. Drilling of pilot hole and riser shaft.
b. Survey data for shaft and riser pipe alignment.
c. Riser pipe installation.
d. Results of mandrel run, including tight or no go locations.
e. Grout placement, monitoring and test results, including grouting locations, pressures, volumes, and grout mix pumped, and time of pumping. Note problems or unusual observations on logs.

8. Submit reports of the continuous directional survey at each quarter point of the depth of the shaft. Include scale drawing plots of deviation from true center versus depth. Also show deviation relative to allowable deviation versus depth.
9. On completion of the shaft, submit Completion Report documenting that the work has been completed in accordance with the Drawings and Specifications or as directed by the CONSTRUCTION MANAGER.

1.04 DEFINITIONS

A. Pilot Hole: Small (3-to 14-inch) diameter hole that is advanced with a drilling system, such as Navidrill, Wellnav, or equivalent that controls the deviation of the hole, to achieve the required precision.

B. Blind Drilling: A means of advancing a full diameter hole within the prescribed tolerances using a rotary drill, fluid circulation system and fluid treatment and recovery system.

C. Raised Bore Drilling: A means of reaming upward from the bottom of a predrilled pilot hole with a larger inverted drill bit that is rotated and pulled upward by a drill stem extending through the pilot hole.

D. Riser Pipe: Permanent pipe used as a carrier pipe for operational use to be installed inside the excavation to convey flows.

1.05 DESIGN CRITERIA

A. Boring equipment selected for the Project shall be suitable for and capable of efficiently advancing through the geologic conditions defined in Section 02 40 00, Tunneled Crossings, and the geologic conditions anticipated by the CONTRACTOR.

B. Cover shaft when not in active use for a period of 8 hours or longer and at end of each work day with traffic plates or a lockable safety net to prevent unauthorized entry or access.

C. The excavated shaft diameter shall not exceed 84 inches.

D. No man-entry of an unsupported shaft is permitted.

1.06 QUALITY CONTROL

A. Grout Strength Tests: Prepare samples for 24-hour and 28-day compressive strength tests according to ASTM C31 for cylinders or ASTM C109 for cubes. Cylinder molds shall be at least 2 inches in diameter and 4 inches long. Grout cubes shall be either 2 inches or 50 millimeters square. Test samples according to ASTM C39 or C109 as applicable. Grout for the cylinders or cubes shall be taken from the grout line. Provide at least one set of four samples for each 100 cubic feet of grout injected but not less than one set for each grouting shift, unless directed otherwise by the CONSTRUCTION MANAGER.

1.07 QUALITY ASSURANCE

A. Boring work shall be performed by an experienced personnel or subcontractor who has at least 10 years of experience in performing riser shaft construction work and has completed at least three similar projects of similar dimensions in similar rock with similar equipment involving at least a 100-foot shaft boring on each project.

B. The superintendent and foreman shall have at least 5 years of experience supervising shaft drilling operations. The boring machine operator(s) shall have technical training in the operation of the proposed drilling and boring equipment and shall have completed, as a primary operator, at least three similar shaft drilling projects involving at least a 100-foot boring in similar rock on each project. The Site Safety Representative and personnel responsible for air quality monitoring shall be experienced in tunnel and shaft construction and shall have current certification by OSHA.

C. Provide a professional land surveyor to be responsible for survey control who is licensed in the State of Colorado and who has prior experience in similar underground projects.

D. Provide at least 72 hours advance written notice to CONSTRUCTION MANGER of the start of the boring. Notify immediately the CONSTRUCTION MANAGER, in writing, when problems are encountered with equipment or materials, or if the conditions encountered are materially and significantly different than those represented within the Contract Documents. Perform Work in the presence of the CONSTRUCTION MANAGER, unless the CONSTRUCTION MANAGER grants prior written approval to perform such Work in CONSTRUCTION MANAGER's absence.

E. Allow access to the CONSTRUCTION MANAGER and furnish necessary assistance and cooperation to aid the CONSTRUCTION MANAGER in observations, measurements, data, and sample collection, including, but not limited to the following:

1. UTILITIES and/or CONSTRUCTION MANAGER shall have full access to the riser shaft during drilling operations. This shall include, but not be limited to, visual inspection of installed riser pipe and verification of plumbness. Provide safe access in accordance with safety regulations.
2. UTILITIES and/or CONSTRUCTION MANAGER shall have full access to the spoil material. Allow CONSTRUCTION MANAGER to collect soil samples from the spoil removal system a minimum of once per installed riser pipe section, or every 8 feet, whichever is more often, and when changes in soil conditions are apparent or suspected.

1.08 SAFETY

A. Be responsible for safety on the Jobsite. Methods of construction shall be such as to ensure the safety of the Work, personnel onsite, and the public. Perform Work in accordance with current applicable regulations and safety requirements of the federal, state, and local agencies. Comply with applicable provisions of 29 CFR Part 1926, Subpart S, Underground Construction and Subpart P, Excavations, by OSHA.

B. No gasoline powered equipment is permitted in the tunnel or shaft. Diesel, electrical, hydraulic, and air powered equipment is acceptable, subject to applicable local, state, and federal regulations.

C. Furnish and operate a temporary ventilation system in accordance with applicable safety requirements when personnel are in the shaft, tunnel or riser pipe. Coordinate the system installation and operation with the tunnel construction. Perform required air and gas monitoring. Ventilation system shall provide a sufficient supply of fresh air and maintain an atmosphere free of toxic or flammable gasses in underground Work areas.

PART 2 PRODUCTS

2.01 MATERIALS

A. Riser Pipe: Pipe used as a carrier pipe, to be installed inside a bored riser shaft, shall conform to Section 33 05 01.02 Welded Steel Pipe and Fittings Weld Before Backfill.

B. Grout:

1. Cement: Cement shall be Type II or Type V portland cement conforming to ASTM C150. Type II cement shall meet Table 4 false set requirements of ASTM C150.
2. Sand: Conform to ASTM C144 except where modified in the following subparagraphs.
   a. Fineness modulus: Between 1.50 and 2.00.
   b. Grading Requirements:

Sieve Sizes	Percentage Passing by Weight
No. 8	100
No. 16	95 - 100
No. 30	60 - 85
No. 50	20 - 50
No. 10	10 - 30
No. 200	0 - 5

3. Fluidifier: Fluidifiers shall hold the solid constituents of the grout in colloidal suspension, be compatible with the cement and water used in the grouting work, and comply with the requirements of ASTM C937.
4. Admixtures: Other admixtures may be used subject to the written approval of the ENGINEER to improve the pumpability, to control set time, to hold sand in suspension, and to prevent segregation and bleeding.

C. CONTRACTOR-designed mandrel to check shaft clearances for riser pipe prior to installation.

D. CONTRACTOR-designed grouting plug or bulkhead to permit grouting of the annular space surrounding the riser pipe.

E. Navidrill, Wellnav, or equal service to ensure straightness of the pilot hole.

F. Surveying services of a licensed land surveyor to measure vertical and horizontal orientation of the shaft top and bottom during riser pipe installation.

G. Gyro surveying equipment to measure true centerline of installed riser pipe.

H. Welding facilities including clamps, rollers, and welding equipment to double joint the riser pipe. Weld clamps shall include rim clamps as manufactured by Cogsdill (or equal).

I. Drilling equipment.

J. Excavation spoil removal equipment.

K. Drill fluid treatment and recovery system.

PART 3 EXECUTION

3.01 GENERAL REQUIREMENTS

A. Do not begin riser shaft boring until the following tasks have been completed:

1. Required Submittals have been provided, reviewed, and approved.
2. A startup inspection of mechanical and hydraulic systems associated with the boring and drilling operations has been completed. The system shall be tested to ensure that the machine and supporting equipment is functioning properly.
3. Site Safety Representative has prepared a code of safe practices and an emergency plan in accordance with OSHA and other applicable requirements. Provide the CONSTRUCTION MANAGER with a copy of each prior to starting boring. Hold safety meetings and provide safety instruction for new employees as required by OSHA. Conduct a pre-construction safety conference in accordance with OSHA requirements. Arrange this conference and inform the CONSTRUCTION MANAGER of the time and place of the conference at least 7 days in advance.

B. Properly manage and dispose of groundwater or surface water inflows to the shafts. Do not discharge groundwater inflows into storm sewers, sanitary sewers, drainage ditches, water bodies, or streets without an approved discharge permit.

C. Conduct operations such that trucks and other vehicles do not interfere with traffic or create a mud, dust, or noise nuisance in the streets and to adjacent properties. Promptly clean up, remove, and dispose of mud and spoils spillage, and material discharges.

D. Perform Work so as not to disturb roadways, railroads, river channels, adjacent structures, landscaped areas, or existing utilities.

E. Operate with a full crew 24 hours a day whenever there is a condition that is likely to endanger the stability of the excavation or adjacent structures, including weekends and holidays, without interruption, until those conditions no longer jeopardize stability.

3.02 DRILLED SHAFT CONSTRUCTION

A. Prior to beginning riser shaft construction, complete excavation, prepare foundations to receive reinforced working slabs as shown on the Drawings.

B. Drill Pilot Hole:

1. Advance bore hole using a drilling system such as Navidrill, Wellnav or equal, which continuously surveys during drilling and controls the deviation of the hole. Notify CONSTRUCTION MANAGER when out of tolerance.
2. When the hole is not within the vertical or horizontal tolerances, first fill with cement grout or other material that will allow the hole to be redrilled to the correct location and then redrill at the correct location.
3. There are no restrictions on the sequence drilling of adjacent pilot holes.

C. Shaft Drilling: Upon completion of the shaft, survey shaft to determine the position of the center of the bottom of the shaft relative to the center of the top of the shaft. Run mandrel test to determine that the shaft is of sufficient diameter to install the riser pipe with a minimum of 3 inches of annulus between the outside of the riser pipe and the excavated rock surface. If there is less than the minimum annulus, enlarge the shaft by reaming (or other means) to provide the required minimum annulus. The completed excavated shaft diameter shall not exceed the criteria presented in Article Control of Line and Grade, Paragraph Tolerances.

D. Dispose of drill cuttings, drilling fluids and water from the shaft construction operations.

E. Contain, transport, and dispose of excavated materials and fluid additives away from the construction site. Discharge into sewers or ditches, or discharge into the shafts is not permitted. Only use the disposal sites identified in approved Submittals for muck and spoil disposal.

3.03 RISER PIPE INSTALLATION

A. Design, fabricate and set support frame and riser pipe template over completed drilled shaft. Accurately position frame and anchor rigidly to guide the riser pipe installation to within specified tolerances.

B. Handle riser pipe in a manner that does not induce bending stresses that exceed the tensile strength of the mortar lining.

C. Place first section of riser pipe over the shaft and lower into the hole and support it on support frame and riser pipe template.

D. Align second section of riser pipe over the first section and install welding clamp to maintain joint alignment during welding.

E. Weld riser pipe in accordance with Drawings and Section 33 05 01.02 Welded Steel Pipe and Fittings Weld Before Backfill.

F. Repeat 3.03.B, through 3.03.E until riser pipe sections have been lowered into the shaft.

G. Align riser pipe and check alignment to confirm conformance with vertical tolerance.

H. If appropriate, provide a temporary bottom cap to prevent intrusion of annulus grout into the riser pipe.

I. Grout in accordance with requirements herein.

J. Do not remove temporary posting support on grout plug until after last grout lift has been placed.

K. Perform gyro survey on completed riser pipe to determine centerline location.

3.04 CONTROL OF LINE AND GRADE

A. Establish and protect benchmarks as necessary prior to the start of construction.

B. After establishing required benchmarks, use these benchmarks to furnish and maintain reference lines and grades for riser shaft boring and riser pipe installation. Use these lines and grades to establish the exact location of the riser pipe. Submit to CONSTRUCTION MANAGER copies of field notes used to establish lines and grades and allow CONSTRUCTION MANAGER to check guidance system setup prior to beginning boring. Provide access for CONSTRUCTION MANAGER to perform survey checks of guidance system and accuracy and plumbness of shaft and riser pipe as necessary. Be fully responsible for the accuracy of the Work and the correction of it, as required.

C. Tolerances:

1. Pilot Hole:
   a. The center of the pilot hole at the top of the riser pipe shall be less than 1 inch from the location shown on the Drawings.
   b. The centerline of the pilot hole shall be within a right circular cone with a base diameter of 6 inches. The apex of the cone shall be at the center of the top of the hole. The center of the base of the cone shall be at the elevation at the invert of the proposed

tunneled crossing of the UPRR tracks at a point projected vertically downward from the apex.

2. Shaft Drilling:
   a. Shaft shall be of sufficient diameter to install 66 inch ID riser pipe with allowances for manufacturing fabrication and installation tolerances allowed in Section 33 05 01.02 Welded Steel Pipe and Fittings Weld Before Backfill and a minimum 3 inch annulus around the riser pipe.
3. Riser Pipe:
   a. The center of the top of the riser pipe shall be within 1 inch of the location shown on the Drawings.
   b. The centerline of the installed riser pipe shall be within a right circular cone with a base diameter of 2 inches. The apex of the cone shall be at the center of the top of the riser pipe. The center at the base of the cone shall be at the elevation of the springline of the horizontal tunneled pipe at a point projected vertically downward from the apex.

D. Perform continuous directional survey during boring operations. Record deviation with respect to design line and grade at least once per foot and submit records to CONSTRUCTION MANAGER as requested. Control line and grade of the riser pipe to within the specified tolerances.

E. Correct the installation, including necessary redesign of the pipeline or structures and acquisition of necessary easements if the riser installation does not meet the specified tolerance.

3.05 BACKFILL GROUTING OF THE RISER PIPE

A. Completely backfill the annular space between the riser pipe and the riser shaft excavation with LDCC in accordance with the requirements of Section 02 24 32, Backfill Grouting.

3.06 CLEANUP

A. After completion of shaft boring and riser pipe installation, remove construction debris, spoils, oil, grease, and other materials from the tunneled pipe, shafts, and Work areas.

END OF SECTION

SECTION 32 11 23
AGGREGATE BASE COURSES

PART 1 GENERAL

1.01 REFERENCES

A. The following is a list of standards that may be referenced in this section:

1. American Association of State Highway and Transportation Officials (AASHTO):
   a. T11, Standard Method of Test for Materials Finer Than 75µm (No. 200) Sieve in Mineral Aggregates by Washing.
   b. C110 Standard Test Methods for Physical Testing of Quick Lime, Hydrated Lime, and Limestone.
   c. C150, Standard Specification for Portland Cement.
   d. C207, Standard Specification for Hydrated Lime for Masonry.
   e. T27, Standard Method of Test for Sieve Analysis of Fine and Coarse Aggregates.
   f. T89, Standard Specification for Determining the Liquid Limit of Soils.
   g. T90, Standard Specification for Determining the Plastic Limit and Plasticity Index of Soils.
   h. T96, Standard Specification for Resistance to Degradation of Small-Size Coarse Aggregate by Abrasion and Impact in the Los Angeles Machine.
   i. T99, Standard Specification for the Moisture-Density Relations of Soils Using a 2.5 kg (5.5 pound) Rammer and a 305 mm (12 in) Drop.
   j. T104, Standard Method of Test for Soundness of Aggregate by Use of Sodium Sulfate or Magnesium Sulfate.
   k. T180, Standard Specification for Moisture-Density Relations of Soils Using a 4.54 kg (10-lb) Rammer and a 457 mm (18-in) Drop.
   l. T190, Standard Specification for Resistance R-Value and Expansion Pressure of Compacted Soils.
   m. T265, Standard Method of Test for Laboratory Determination of Moisture Content of Soils.
   n. T310, Standard Specification for In-Place Density and Moisture Content of Soil and Soil-Aggregate by Nuclear Methods (Shallow Depth).
2. ASTM International (ASTM):
   a. C88, Test Method for Soundness of Aggregates by Use of Sodium Sulfate or Magnesium Sulfate.
   b. C110, Standard Test Methods for Physical Testing of Quick Lime, Hydrated Lime, and Limestone.

c. C150, Standard Specification for Portland Cement.
d. C207, Standard Specification for Hydrated Lime for Masonry.
e. D698, Standard Test Methods for Laboratory Composition Characteristics for Soil Using Standard Effort (12,400 ft-lbf/ft^3 (600 kN-m/m^3)).
f. D1883, Test Method for CBR (California Bearing Ratio) of Laboratory Compacted Soils.
g. D2419, Test Method for Sand Equivalent Value of Soils and Fine Aggregate.
h. D4791, Test Method for Flat Particles, Elongated Particles, or Flat and Elongated Particles in Coarse Aggregate.

3. Colorado Department of Transportation (CDOT): Standard Specifications for Road and Bridge Construction Current Edition) (latest revisions).
4. Pueblo County Roadway Design and Construction Standards (PCR&BD).

1.02 DEFINITIONS

A. Completed Course: Compacted, unyielding, free from irregularities, with smooth, tight, even surface, true to grade, line, and cross-section.

B. Completed Lift: Compacted with uniform cross-section thickness.

C. Standard Specifications: When referenced in this section, CDOT Standard Specifications for Road and Bridge Construction (Current Edition) (latest revisions).

1.03 SUBMITTALS

A. Informational Submittals:

1. Certified Test Results on Source Materials: Submit copies from a material supplier 20 days prior to delivery of materials to Site showing materials meeting the physical qualities specified. The test results should include:
   a. Material(s) being tested to meet the required specifications including documented gradation, Atterberg limits and CBR/R-value testing.
   b. The test procedures employed.
   c. The supplier's manufacturing, mining or treating process by which the tested materials were created.
   d. The material test results.

PART 2 PRODUCTS

2.01 MATERIALS

A. Subbase Course: The material must have a maximum Liquid Limit (LL) of 30 and a maximum L.A Abrasion of 50.

Sieve Designation	Percent Passing
2/3 the depth of subbase couse layer	100
No. 10	< 80
No. 200	5—15

B. Base Course: Class 6 aggregate material to be crushed material with at least 50 percent of the material remaining upon the No. 4 sieve having at least two fractured faces. Slag based Class 6 aggregate base course material is not allowed as a final surface treatment. Slag based Class 6 aggregate base course is acceptable for base material under a final asphalt or concrete paving course. This material shall consist of hard, durable particles or fragments of stone or gravel, crushed to required sizes, containing an appropriate quantity of sand or other finely-divided mineral matter which conform to the requirements of AASHTO M 147, and CDOT Section 703.03. In addition, the material must have a maximum Liquid Limit (LL) of 30, an R-value of 72 or greater, or a CBR of 80+, and must be moisture stable.

Sieve Designation	Percent Passing
3/4"	100
No. 4	30—65
No. 8	25—55
No. 200	3—12

C. Aggregate for hot bituminous paving: Conform to the CDOT Standard Specifications for Road and Bridge Construction (Current Edition) (latest revisions).

D. Borrow Material:

1. Provide borrow material used within the right-of-way meeting the following requirements and subject to approval of Pueblo County and CONSTRUCTION MANAGER.
2. Provide borrow material that is non-organic, and contains no trash or perishables nor particles exceeding 4 inches in size, and with a minimum dry density of 90 pounds per cubic foot.

3. Provide borrow material consisting of material that is essentially a granular soil with a minimum "R" value of 40, a maximum liquid limit of 30, a maximum plasticity index of 6, and the following grain size distribution:

Sieve Designation	Percent Passing
4"	100
No. 200	3—20

E. Provide aggregate base course material for final surface of gravel roads with a maximum liquid limit of 25, a plasticity index of 6 or less, and consisting of a crushed naturally occurring rock material (no slag) with at least 50 percent of the material remaining on the No. 4 sieve having at least two fractured faces. Provide material meeting the following gradation:

Sieve Designation	Percent Passing
1"	100
1/2"	75—85
No. 4	30—65
No. 8	25—55
No. 200	12—18

F. Commercial Mineral Filters: Portland cement to conform to ASTM C150. For the maximum percent of equivalent alkalis ($Na_2O+0.658K_2O$) do not exceed 0.90 percent. Hydrated lime to conform to the requirements of ASTM C207, Type N. For the residue retained on a 75 µm (No. 200) sieve, do not exceed 10 percent when determined in accordance with ASTM C110 (Drying of the residue in an atmosphere free from carbon dioxide will not be required.).

2.02 SOURCE QUALITY CONTROL

A. Perform tests necessary to locate acceptable source of materials meeting specified requirements.

B. Final approval of aggregate material will be based on test results of installed materials taken from each lift.

C. Should separation of coarse from fine materials occur during processing or stockpiling, immediately change methods of handling materials to correct uniformity in grading.

PART 3 EXECUTION

3.01 SUBGRADE PREPARATION

A. As specified in Section 31 23 13, Subgrade Preparation.

B. Obtain CONSTRUCTION MANAGER's acceptance of subgrade before placing base course or surfacing material.

C. Do not place base course or surfacing materials in snow or on soft, muddy, or frozen subgrade.

3.02 EQUIPMENT

A. Compaction Equipment: Adequate in design and number to provide compaction and to obtain specified density for each layer.

3.03 HAULING AND SPREADING

A. Hauling Materials:

1. Do not haul over surfacing in process of construction.
2. Loads: Of uniform capacity.
3. Maintain consistent gradation of material delivered; loads of widely varying gradations will be cause for rejection.

B. Spreading Materials:

1. Distribute material to provide required density, depth, grade, and dimensions with allowance for subsequent lifts.
2. Produce even distribution of material upon roadway or prepared surface without segregation.
3. Should segregation of coarse from fine materials occur during placing, immediately change methods of handling materials to correct uniformity in grading.

3.04 CONSTRUCTION OF COURSES

A. Aggregate Base Course:

1. Maximum Completed Lift Thickness: 6 inches. When vibratory or other approved types of special compacting equipment are used, the compacted depth of a single layer may be increased to 8 inches upon request, provided that specified density is achieved and written approval is given.
2. Completed Course Total Thickness: As shown.
3. Mix the aggregate by methods that insure a thorough and homogenous mixture.

4. Spread lift on preceding course to required cross-section. If the required compacted depth of the aggregate base course exceeds 6 inches, construct in two or more layers of approximately equal thickness.
5. Lightly blade and roll surface until thoroughly compacted. Continue compaction of each layer until a density of not less than the required maximum density as specified in Section 31 23 23.15, Trench Backfill, is achieved. Compaction of each layer shall continue until a density of not less than 95 percent of the maximum density determined in accordance with AASHTO T 180 has been achieved. The surface of each layer shall be maintained during the compaction operations so that a uniform texture is produced and the aggregates are firmly keyed. Water shall be uniformly applied during compaction in the quantity necessary for proper consolidation.
6. Add keystone to achieve compaction and as required when aggregate does not compact readily due to lack of fines or natural cementing properties, as follows:
   a. Use leveling course or surfacing material as keystone.
   b. Spread evenly on top of base course, using spreader boxes or chip spreaders.
   c. Roll surface until keystone is worked into interstices of base course without excessive displacement.
   d. Continue operation until course has become thoroughly keyed, compacted, and will not creep or move under roller.
   e. Apply water during compaction in the quantity necessary for proper consolidation.
7. Blade or broom surface to maintain true line, grade, and cross-section.

B. Gravel Surfacing:

1. Maximum Completed Lift Thickness: 6 inches.
2. Completed Course Total Thickness: As shown.
3. Spread on preceding course in accordance with cross-section shown.
4. Blade lightly and roll surface until material is thoroughly compacted.

C. Resurfacing of Roads:

1. After proper backfill procedures are completed in accordance with the preceding requirements, surface the vacant depth to a condition equal to or better than the original surface. Begin temporary and/or permanent repairs within 24 hours after backfilling is completed on streets or highways designated by Pueblo County and continue until repairs are made. Complete permanent repairs on other streets or highways within a period of 15 calendar days. At the discretion of the Pueblo County, a delay of up to 7 days in the time designated for initiation or completion of repairs may be granted. The 24-hour designation will be noted on the permit at the time of issuance. The minimum standards apply to resurfacing done in Pueblo County within Pueblo County's jurisdiction.

2. Gravel Surfaced Roads: Place backfill to within 12 inches of the surface, and fill the 12-inch vacant depth with thoroughly tamped granular material meeting the requirements specified under the Aggregate for Bases Item, Class 6 of the CDOT Standard Specifications (Current Issue), or materials extracted at the same precise location, or other suitable granular materials approved by the Pueblo County Engineer.
3. Soil Cement Surfaced Roads: Place backfill within 18 inches of the surface. Place granular material meeting the requirements specified under the Aggregate for Bases Item, Class 6 of the CDOT Standard Specifications (Current issue) and thoroughly compact to within 8 inches of the surface. Fill the 8-inch vacant depth with 5.5 sacks per cubic yard portland cement concrete, struck and floated to match adjacent undisturbed surface. Match 95 percent of patched surface to the plane of the adjacent surface, when measured by means of a 6-foot straight edge or beam, within 1/8-inch.
4. Portland Cement Surfaced Roads: Place backfill within 18 inches of the surface or 10 inches below the bottom of the existing slab, whichever is the deepest, and fill the next 10 inches with thoroughly compacted granular material as described in subparagraph 3 above. Fill the 8-inch minimum vacant depth with 6.5 sacks per cubic yard portland cement concrete struck and floated to match the adjacent undisturbed surface. Match 95 percent of patched surface to the plane of the adjacent undisturbed surface, when measured by means of a 6-foot straight edge or beam, within 1/8-inch.
5. Asphaltic Concrete Surfaced Roads: Place backfill material within 12 inches of the surface. Place granular material described in Subparagraph 2.01.B and thoroughly wet and compact to within 4 inches of the surface. Prior to the placing of Asphaltic Concrete, coat the edges of the cut with a tack oil of SS-1 at not less than 0.10-gallon per square yard. Fill the 4-inch vacant depth with asphaltic concrete in 2-inch lifts and thoroughly compacted. Mix asphaltic concrete for this purpose with asphaltic cement of the 64-22 type, or equal. Match 95 percent of patched surface to the plane of the adjacent undisturbed surface, when measured by means of a 6-foot straight edge or beam, within 1/8-inch.
6. Install a prime coat of CRS-2P tack oil applied at a rate of 0.30-gallon per square yard on the surface area of granular material at the time of the issuance of a permit or as directed by Pueblo County. See Section 32 12 16, Asphalt Paving.

3.05 SURFACE TOLERANCES

A. Blade or otherwise work surfacing as necessary to maintain grade and cross-section, and to keep surface smooth and thoroughly compacted.

B. Finished Surface of Untreated Aggregate Base Course: Within plus or minus 0.04 foot of grade shown at any individual point.

C. Gravel Surfacing: Within 0.04 foot from lower edge of 10-foot straightedge placed on finished surface, parallel to centerline.

D. Overall Average: Within plus or minus 0.01 foot from crown and grade specified.

3.06 FIELD QUALITY CONTROL

A. In-Place Density Tests:

1. Testing will be conducted by UTILITIES' materials testing firm in accordance with Section 31 23 23.15, Trench Backfill.
2. Unless required otherwise under regulatory agency permit, refer to Table 1 for minimum sampling and testing requirements for aggregate base course and surfacing.

Table 1
MINIMUM SAMPLING AND TESTING REQUIREMENTS

Property	Test Method	Frequency	Sampling Point
Gradation	AASHTO T11 and AASHTO T27	One sample every 500 tons but at least every 4 hours of production	Roadbed after processing
Moisture Density (Maximum Density)	AASHTO T180, Method D	One test for every aggregate grading produced	Production output or stockpile
In-Place Density and Moisture Content	AASHTO T310, and AASHTO T265 for moisture content	One for each 500 ton but at least every 10,000 sq ft of area	In-place completed, compacted area

3.07 CLEANING

A. Remove excess material from the Site. Clean stockpile and staging areas of excess aggregate.

END OF SECTION

SECTION 32 12 16
ASPHALT PAVING

PART 1 GENERAL

1.01 DESCRIPTION

A. Asphalt pavement, aggregate base course, temporary trench cover, and pavement markings.

1.02 REFERENCES

A. The following is a list of standards that may be referenced in this section:

1. American Association of State Highway and Transportation Officials (AASHTO):
   a. M17, Standard Specification for Mineral Filler for Bituminous Paving Mixtures.
   b. M81, Standard Specification for Cut-Back Asphalt (Rapid Curing Type).
   c. M82, Standard Specification for Cut-Back Asphalt (Medium Curing Type).
   d. M140, Standard Specification for Emulsified Asphalt.
   e. M208, Standard Specification for Cationic Emulsified Asphalt.
   f. T166, Standard Method of Test for Bulk Specific Gravity of Compacted Asphalt Mixtures Using Saturated Surface-Dry Specimens.
   g. T176 Standard Method of Test for Plastic Fines in Graded Aggregates and Soils by Use of the Sand Equivalent Test.
   h. T230, Standard Method of Test for Determining Degree of Pavement Compaction of Bituminous Aggregate Mixtures.
   i. T245, Standard Method of Test for Resistance to Plastic Flow of Bituminous Mixtures Using Marshall Apparatus.
   j. T246, Standard Method of Test for Resistance to Deformation and Cohesion of Bituminous Mixtures by Means of Hveem Apparatus.
   k. T247, Standard Method of Test for Preparation of Test Specimens of Bituminous Mixtures by Means of California Kneading Compactor.
   l. T283, Standard Method of Test for Resistance of Compacted Bituminous Mixture to Moisture Induced Damage.
   m. T304, Standard Method of Test for Uncompacted Void Content of Fine Aggregate (Method A).
2. Asphalt Institute (AI):
   a. Manual Series No. 2 (MS-2), Mix Design Methods for Asphalt Concrete.
   b. Superpave Series No. 2 (SP-2), Superpave Mix Design.

3. ASTM International (ASTM):
   a. D2041, Test Method for Theoretical Maximum Specific Gravity and Density of Bituminous Paving Mixtures.
   b. D4318, Test Methods for Liquid Limit, Plastic Limit, and Plasticity Index of Soils.
   c. D4791, Test Method for Flat Particles, Elongated Particles, or Flat and Elongated Particles in Coarse Aggregate.
   d. D5821, Test Method for Determining the Percentage of Fractured Particles in Coarse Aggregate.
   e. E329, Specification for Agencies Engaged in the Testing and/or Inspection of Materials Used in Construction.
4. Colorado Department of Transportation (CDOT): Standard Specifications for Road and Bridge Construction (Current Edition) (latest revisions).
5. Pueblo County Roadway Design and Construction Standards (PCR&BD).

1.03 DEFINITIONS

A. Combined Aggregate: Mineral constituents of asphalt concrete mix, including mineral filler and separately sized aggregates.

B. RAP: Reclaimed asphalt pavement.

C. Standard Specifications: CDOT Standard Specifications for Road and Bridge Construction (Current Edition) (latest revisions).

1.04 DESIGN REQUIREMENTS

A. Prepare asphalt concrete mix design, meeting the following design criteria, tolerances, and other requirements of this Specification and the CDOT Standard Specifications, Section 401.

1.05 SUBMITTALS

A. Informational Submittals:

1. Asphalt Concrete Mix Formula:
   a. Submit minimum of 15 days prior to start of production.
   b. Submittal to include the following information:
      1) Gradation and portion for each aggregate constituent used in mixture to produce a single gradation of aggregate within specified limits.
      2) Bulk specific gravity for each aggregate constituent.
      3) Measured maximum specific gravity of mix at optimum asphalt content determined in accordance with ASTM D2041.

4) Properties as stated in Sections 411 and 702 of the CDOT Standard Specifications, for at least four different asphalt contents other than optimum, two below optimum, and two above optimum.
5) Percent of asphalt lost due to absorption by aggregate.
6) Index of Retained Strength (TSR) at optimum asphalt content as determined by AASHTO T283.
7) Percentage of asphalt cement, to nearest 0.1 percent, to be added to mixture.
8) Optimum mixing temperature.
9) Optimum compaction temperature.
10) Temperature-viscosity curve of asphalt cement to be used.
11) Brand name of any additive to be used and percentage added to mixture.

2. Test Report for Asphalt Cement:
   a. Submit minimum 10 days prior to start of production.
   b. Show appropriate test method(s) for each material and the test results.
3. Manufacturer's Certificate of Compliance, in accordance with Section 01 43 33, Manufacturers' Field Services, for the following materials:
   a. Aggregate: Gradation, source test results as defined in Sections 703 of the CDOT Standard Specifications.
   b. Asphalt for Binder: Type, grade, and viscosity-temperature curve.
   c. Prime Coat: Type and grade of asphalt.
   d. Tack Coat: Type and grade of asphalt.
   e. Additives.
   f. Mix: Conforms to job-mix formula.
4. Statement of qualification for independent testing laboratory.
5. Test Results:
   a. Mix design.
   b. Asphalt concrete core.
   c. Gradation and asphalt content of uncompacted mix.
   d. Field density.
6. Pavement Markings:
   a. Product data for paint, thermoplastic material, reflective markers, and plastic beads.
   b. Manufacturer's Instructions:
      1) Application:
         a) Preformed tape.
         b) Glass beads.
         c) Epoxy resin.
         d) Reflective markers.

1.06 QUALITY ASSURANCE

A. Qualifications:

1. Independent Testing Laboratory: In accordance with ASTM E329.
2. Prepare asphalt concrete mix formula by approved certified independent laboratory under the supervision of a certified asphalt technician.

1.07 ENVIRONMENTAL REQUIREMENTS

A. Temperature: Do not apply asphalt materials or place asphalt mixes when ground temperature is lower than 50 degrees F or air temperature is lower than 40 degrees F. Measure ground and air temperature in shaded areas away from heat sources or wet surfaces.

B. Moisture: Do not apply asphalt materials or place asphalt mixes when application surface is wet.

PART 2 PRODUCTS

2.01 MATERIALS

A. Prime Coat: Conform to Sections 411 and 702 of the CDOT Standard Specifications.

B. Tack Coat: Emulsified asphalt, conform to Sections 411 and 702 of the CDOT Standard Specifications.

C. Sand (Blotter Material): As specified in Section 407 of the CDOT Standard Specifications.

2.02 ASPHALT CONCRETE MIX

A. General:

1. Do not modify mix formula except with written approval of ENGINEER.
2. Source Changes:
   a. Should material source(s) change, establish new asphalt concrete mix formula before new material(s) is used.
   b. Perform check tests of properties of plant-mix bituminous materials on first day of production and as requested by CONSTRUCTION MANAGER to confirm that properties are in compliance with design criteria.
   c. Make adjustments in gradation or asphalt content as necessary to meet design criteria.

B. Composition: Hot-plant mix of aggregate, mineral filler if required, and paving grade asphalt cement. The several aggregate fractions to be sized, uniformly graded, and combined in such proportions that resulting mixture meets grading requirements of mix formula.

C. Aggregate: As specified in Section 703 of the CDOT Standard Specifications.

D. Mineral Filler: In accordance with Section 703 of the CDOT Standard Specifications.

E. Asphalt Cement: Paving Grade AC-10.

PART 3 EXECUTION

3.01 GENERAL

A. Traffic Control: Minimize inconvenience to traffic, but keep vehicles off freshly treated or paved surfaces to avoid pickup and tracking of asphalt.

B. Weather Limitations: Place hot mix asphalt only on properly prepared unfrozen surfaces that are free of water, snow, and ice in accordance with CDOT Standard Specifications, Section 401.06.

3.02 LINE AND GRADE

A. Provide and maintain intermediate control of line and grade, independent of underlying base, to meet finish surface grades and minimum thickness.

B. Shoulders: Construct to line, grade, and cross-section shown.

3.03 PREPARATION

A. Prepare subgrade as specified in Section 31 23 13, Subgrade Preparation.

B. Existing Roadway:

1. Modify profile by grinding, milling, or overlay methods as approved, to provide meet lines and surfaces and to produce smooth riding connection to existing facility.
2. Remove existing material to a minimum depth of 1 inch.
3. Paint edges of meet line with tack coat prior to placing new pavement.

C. Thoroughly coat edges of contact surfaces (curbs, manhole frames) with emulsified asphalt or asphalt cement prior to laying new pavement. Prevent staining of adjacent surfaces.

3.04 UTILITY EXCAVATION OVERLAY

A. Prime Coat: A prime coat of CRS-2P tack oil applied at a rate of 0.30-gallon per square yard may be required on the surface area of granular material at the time of the issuance of a permit or as directed by the CONSTRUCTION MANAGER.

B. Required Overlay:

1. For roads outside of Lake Pueblo State Park, overlay of the entire street width and 10 feet beyond each end of the damaged area, at the discretion of Pueblo County, when the utility installation is made longitudinally within 5 feet of, or on the centerline of, the paved street for a length of 75 linear feet or more. For lengths less than those stated above, make the repairs and/or overlays as agreed to by the Pueblo County Inspector, prior to obtaining a permit. If the excavation within 5 feet of the centerline does not extend into the adjacent traffic lane, overlay of only one-half of the entire street width may be required.
2. Overlay of one-half of the entire street width and 10 feet beyond each end of the damaged area is required when the utility installation is made longitudinally within the area 5 feet from centerline and edge of paved street for a length of 75 linear feet or more. For lengths less than those stated above, make the repairs and/or overlays as agreed to by the Pueblo County Inspector, prior to obtaining a permit.
3. Overlay of the entire street width and 10 feet beyond each incorporated damaged area is required when two or more lateral utility installations are made by the same excavation within 75 linear feet of street length. Three or more lateral utility installations within 150 linear feet of street length and five or more lateral utility installations within 300 linear feet of street require full street width overlay.
4. Overlay a minimum compacted depth of the asphaltic concrete of 5/8-inch with edges feathered, eliminating the fracturing of the mix aggregate. For the area of overlay a tack coat of SS-1 at the rate of 0.10-gallon per square yard is required.

C. Place the overlay described above by a mechanized self-propelled paver and finished in a good, workmanlike manner, using good commercial practices.

D. During certain times of the year when hot plant-mixed asphalt is unavailable, cold plant-mixed asphaltic concrete may be placed using the above-stated procedures. This is not considered a permanent patch. Maintain the temporary as required to insure the proper and safe movement of traffic until such as a permanent patch is installed. Install permanent patch with hot asphalt concrete within 15 days following the availability of the proper material.

E. At the conclusion of work on any street, cut, or opening, leave the entire area in a condition as good as or better than original condition. Remove waste construction or excavated materials from the Site and dispose within 72 hours. Leave ditches, gutters, culverts or drain pipes unblocked and in a condition as good as or better than the original condition.

3.05 PAVEMENT APPLICATION

A. General: Place asphalt concrete mixture on approved, prepared base in conformance with this section.

B. Pavement Mix:

1. Prior to Paving:
   a. Sweep primed surface free of dirt, dust, or other foreign matter.
   b. Patch holes in primed surface with asphalt concrete pavement mix.
   c. Blot excess prime material with sand.
2. Place asphalt concrete pavement mix in two equal lifts.
3. Compacted Lift Thickness:
   a. Minimum: Twice maximum aggregate size, but in no case less than 1 inch.
   b. Maximum: 4 inches.
4. Total Compacted Thickness: As shown.
5. Apply such that meet lines are straight and edges are vertical.
6. Collect and dispose of segregated aggregate from raking process. Do not scatter material over finished surface.
7. Joints:
   a. Offset edge of each layer a minimum of 6 inches so joints are not directly over those in underlying layer.
   b. Offset longitudinal joints in roadway pavements so longitudinal joints in wearing layer coincide with pavement centerlines and lane divider lines. Do not construct joint in wheel path.
   c. Form transverse joints by cutting back on previous day's run to expose full vertical depth of layer.
   d. Do not pass rollers over the unprotected end of a freshly laid mixture.
8. Succeeding Lifts: Apply tack coat to pavement surface between each lift.
9. After placement of pavement, seal meet line by painting a minimum of 6 inches on each side of joint with cut-back or emulsified asphalt. Cover immediately with sand.

C. Compaction:

1. Roll until roller marks are eliminated and density of 92 percent of measured maximum density determined in accordance with ASTM D2041 is obtained.
2. Joint Compaction:
   a. Place top or wearing layer as continuously as possible.
   b. Pass roller over unprotected end of freshly laid mixture only when placing of mix is discontinued long enough to permit mixture to become chilled.
   c. Cut back previously compacted mixture when Work is resumed to produce slightly beveled edge for full thickness of layer.
   d. Cut away waste material and lay new mix against fresh cut.

D. Tolerances:

1. General: Conduct measurements for conformity with crown and grade immediately after initial compression. Correct variations immediately by removal or addition of materials and by continuous rolling.
2. Completed Surface or Wearing Layer Smoothness:
   a. Uniform texture, smooth, and uniform to crown and grade.
   b. Maximum Deviation: 1/8 inch from lower edge of a 12-foot straightedge, measured continuously parallel and at right angle to centerline.
   c. If surface of completed pavement deviates by more than twice specified tolerances, remove and replace wearing surface.
3. Transverse Slope Maximum Deviation: 1/4 inch in 12 feet from rate of slope shown.
4. Finished Grade:
   a. Perform field differential level survey on maximum 50-foot meter grid and along grade breaks.
   b. Maximum Deviation: 0.02 foot from grade shown.
5. Remove and replace mixtures that become loose and broken, mixed with dirt or in any way defective, with fresh hot mixture and compacted to conform with the surrounding area.

E. Seal Coat:

1. General: Apply seal coat of paving grade or emulsified asphalt to finished surface at longitudinal and transverse joints, joints at abutting pavements, areas where asphalt concrete was placed by hand, patched surfaces, and other areas as directed by CONSTRUCTION MANAGER.
2. Preparation:
   a. Maintain surfaces that are to be sealed free of holes, dry, and clean of dust and loose material.
   b. Seal in dry weather and when temperature is above 35 degrees F.

3. Application:
   a. Fill cracks over 1/16 inch in width with asphalt-sand slurry or approved crack sealer prior to sealing.
   b. When sealing patched surfaces and joints with existing pavements, extend minimum 6 inches beyond edges of patches.

3.06 PAVEMENT OVERLAY

A. Preparation:

1. Remove fatty asphalt, grease drippings, dust, and other deleterious matter.
2. Surface Depressions: Fill with asphalt concrete mix, and thoroughly compact.
3. Damaged Areas: Remove broken or deteriorated asphalt concrete and patch as specified in Article Patching.
4. Portland Cement Concrete Joints: Remove joint filler to minimum 1/2 inch below surface.

B. Application:

1. Tack Coat: As specified by CDOT (Current Edition).
2. Place and compact asphalt concrete as specified in Article Pavement Application.
3. Place first layer to include widening of pavement and leveling of irregularities in surface of existing pavement.
4. Do not exceed 2 inches for the actual compacted thickness of any one lift when leveling irregular surfaces and raising low areas l.
5. Actual compacted thickness of intermittent areas of 120 square yards or less may exceed 2 inches, but not 4 inches.
6. Final Wearing Layer: Uniform thickness and meet grade and cross-section as shown.

3.07 FIELD QUALITY CONTROL

A. General: UTILITIES will provide services of approved certified independent testing laboratory to conduct field tests.

END OF SECTION

SECTION 32 31 13
CHAIN LINK AND ORANGE SAFETY FENCES AND GATES

PART 1 GENERAL

1.01 REFERENCES

A. The following is a list of standards that may be referenced in this section:

1. ASTM International (ASTM):
   a. A121, Standard Specification for Metallic-Coated Carbon Steel Barbed Wire.
   b. A313/A313M, Standard Specification for Stainless Steel Spring Wire.
   c. A392, Standard Specification for Zinc-Coated Steel Chain-Link Fence Fabric.
   d. A491, Standard Specification for Aluminum-Coated Steel Chain-Link Fence Fabric.
   e. A497/A497M, Standard Specification for Steel Welded Wire Reinforcement, Deformed, for Concrete.
   f. A615/A615M, Standard Specification for Deformed and Plain Billet-Steel Bars for Concrete Reinforcement.
   g. A780, Standard Specification for Repair of Damaged and Uncoated Areas of Hot-Dipped Galvanized Coatings.
   h. A824, Standard Specification for Metallic-Coated Steel Marcelled Tension Wire for Use with Chain Link Fence.
   i. A1011/A1011M, Standard Specification for Steel, Sheet and Strip, Hot-Rolled, Carbon, Structural, High-Strength Low-Alloy and High-Strength Low-Alloy with Improved Formability.
   j. C94/C94M, Standard Specification for Ready-Mixed Concrete.
   k. C150, Standard Specification for Portland Cement.
   l. C387, Standard Specifications for Packaged, Dry, Combined Materials for Mortar and Concrete.
   m. F552, Standard Terminology Relating to Chain Link Fencing.
   n. F567, Standard Practice for Installation of Chain-Link Fence.
   o. F626, Standard Specification for Fence Fittings.
   p. F668, Standard Specification for Polyvinyl Chloride (PVC) and Other Organic Polymer-Coated Steel Chain-Link Fence Fabric.
   q. F900, Standard Specification for Industrial and Commercial Swing Gates.
   r. F934, Standard Specification for Standard Colors for Polymer-Coated Chain Link Fence Materials.
   s. F1043, Standard Specification for Strength and Protective Coatings on Metal Industrial Chain Link Fence Framework.
   t. F1083, Standard Specification for Pipe, Steel, Hot-Dipped Zinc-Coated (Galvanized) Welded, for Fence Structures.

u. F1183, Standard Specifications for Aluminum Alloy Chain Link Fence Fabric.
v. F1184, Standard Specifications for Industrial and Commercial Horizontal Slide Gates.
w. F1379, Standard Terminology Relating to Barbed Tape.
x. F1911, Standard Practice for Installation of Barbed Tape.
y. F1916, Standard Specification for Selecting Chain Link Barrier Systems with Coated Chain Link Fence Fabric and Round Posts for Detention Applications.

2. Institute of Electrical and Electronic Engineers (IEEE), Inc.: C2, National Electrical Safety Code.
3. National Electrical Manufacturers Association (NEMA): 250, Enclosures for Electrical Equipment (1,000 volts max.).

1.02 DEFINITIONS

A. Terms as defined in ASTM F552.

1.03 SUBMITTALS

A. Action Submittals:

1. Shop Drawings:
   a. Detailed information, construction details, and specifications for materials, finishes, and dimensions.
2. Samples: Approximately 6 inches square, or 6 inches long of posts, rails, braces, fabric, wire, ties and fittings.
3. Submit samples of available fence colors.

B. Informational Submittals:

1. Manufacturer's recommended installation instructions.
2. Evidence of Supplier and installer qualifications.

1.04 QUALITY ASSURANCE

A. Design, supply of equipment and components, installation, and on-call service are to be product of individual company with record of installations meeting requirements specified.

1.05 DELIVERY, STORAGE, AND HANDLING

A. Deliver materials to Site in undamaged condition. Store materials off the ground to provide protection against oxidation caused by ground contact.

1.06 SCHEDULING AND SEQUENCING

A. Complete necessary Site preparation and grading before installing fences and gates.

B. Interruption of Existing Utility Service: Notify owner of utility 72 hours prior to interruption of utility services. Do not proceed with interruption of utility service without written permission from utility owner.

PART 2 PRODUCTS

2.01 GENERAL

A. Match style, finish, and color of each fence component with that of other fence components. Place existing fencing back to its original location.

2.02 CHAIN LINK FENCE FABRIC

A. PVC-coated or Polymer-coated galvanized fabric conforming to ASTM F668, Class 1 or Class 2a.

1. Color: Color selected by CONSTRUCTION MANAGER from available manufacturer colors.

B. Height: 72 inches, unless otherwise shown.

C. Core Wire Gauge: No. 6.

D. Pattern: 1-inch diamond-mesh.

E. Diamond Count: Manufacturer's standard and consistent for fabric furnished of same height.

F. Loops of Knuckled Selvages: Closed or nearly closed with space not exceeding diameter of wire.

G. Wires of Twisted Selvages:

1. Twisted in a closed helix three full turns.
2. Cut at an angle to provide sharp barbs that extend minimum 1/4 inch beyond twist.

2.03 POSTS

A. General:

1. Strength and Stiffness Requirements: ASTM F1043, heavy industrial fence except as modified in this section.
2. Round Steel Pipe, Schedule 40: ASTM F1083.

3. Roll-Formed Steel Shapes: Roll-formed from ASTM A1011/A1011M, Grade 45, High-Strength Low-Alloy steel.
4. Lengths: Manufacturer's standard with allowance for minimum embedment below finished grade of 34 inches.
5. Protective Coatings:
   a. Zinc Coating: ASTM F1043, Type A external and internal coating.

B. Line Posts:

1. Round Steel Pipe:
   a. Outside Diameter: 2.375 inches.
   b. Weight: 3.65 pounds per foot.

C. End, Corner, Angle, and Pull Posts:

1. Round Steel Pipe:
   a. Outside Diameter: 2.875 inches.
   b. Weight: 5.79 pounds per foot.

D. Posts for Removable Fence Panels: As specified for end, corner, angle, and pull posts.

E. Posts for Swing Gates: ASTM F1184, Type II, Class 2.

2.04 POSTS FOR SWING GATES

A. Posts for swing gates 8 feet high and under.

B. ASTM F900.

C. Rounded Steel Pipe:

1. Outside Diameter: 2.875 inches.
2. Weight: 5.79 pounds per foot.

2.05 TOP RAILS AND BRACE RAILS

A. Galvanized Round Steel Pipe:

1. ASTM F1083.
2. Outside Diameter: 1.66 inches.
3. Weight: 2.27 pounds per foot.

B. Protective Coatings: As specified for posts.

C. Color Coating: Minimum 10-mil thickness over protective coating.

D. Strength and Stiffness Requirements: ASTM F1043, Top Rail, heavy or light industrial fence.

2.06 FENCE FITTINGS

A. General: In conformance with ASTM F626, except as modified by this article.

B. Post and Line Caps: Designed to accommodate passage of top rail through cap, where top rail required.

C. Tension and Brace Bands: Per ASTM F626.

D. Tension Bars:

1. One-piece.
2. Equal in length to full height of chain link fabric.
3. Provide one bar for each gate and end post, and two for each corner and pull post.

E. Truss Rod Assembly: 3/8-inch diameter, steel, hot-dip galvanized after threading rod and turnbuckle or other means of adjustment.

2.07 GATES

A. General:

1. Gate Operation: Opened and closed easily by one person.
2. Welded Steel Joints: Paint with zinc-based paint.
3. Chain Link Fabric: Attached securely to gate frame at intervals not exceeding 15 inches.

B. Cantilever Sliding Gates:

1. ASTM F1184, Type II, Class 1.
2. Cantilever Gate Support Posts: Spaced on maximum 10-foot centers.

2.08 TEMPORARY FENCING

A. Use fences in accordance with the following provisions and as shown on the Drawings.

B. Orange Safety Fence:

1. High visibility fabric machine produced from polypropylene or polyethylene.
2. Fabric may be virgin or recycled polymer materials or a combination of virgin and recycled polymer materials. No biodegradable filler materials are allowed.
3. Fabric to be fully stabilized ultraviolet (UV) resistant.

4. Fabric to be a minimum of 4 feet wide with a maximum mesh opening of 2 inches by 2 inches.
5. Furnish fabric in one continuous width and not spliced to conform to the specified width dimension.
6. Color: Orange.

C. Fasteners:

1. Tie wire or locking plastic fasteners.
2. Maximum spacing of the fasteners along the steel post is 24 inches.

D. Barbed Wire Fence: As specified in Section 32 31 26, Wire Fences and Gates.

E. Chain Link Fences: As specified in this Specification.

2.09 USE OF FENCE AND GATES TYPES

A. Use fence and gate types in accordance with the following provisions, unless otherwise shown on the Drawings:

1. Security Fencing: Temporary fence around office areas, staging areas, material storage areas, and equipment storage areas where approved by CONSTRUCTION MANAGER or shown on the Drawings or required or indicated.
   a. Chain link fence and gates as specified in this section.
2. Work Limit Fencing: Temporary fence along Work Limits where approved by CONSTRUCTION MANAGER or shown on the Drawings or required or indicated.
   a. Chain link fence and gates as specified in this section.
   b. Orange safety fence.
   c. Barbed wire and metal gates as specified in Section 32 31 26, Wire Fences and Gates.
3. Open Excavation Fencing: Temporary fence around open excavation areas where approved by CONSTRUCTION MANAGER or shown on Drawings or required or indicated.
   a. Chain link fence and gates as specified in this section.
   b. Orange safety fence.
   c. Barbed wire and metal gates as specified in Section 32 31 26, Wire Fences and Gates.
4. Environmentally Sensitive Areas Fencing: Temporary fence where approved by CONSTRUCTION MANAGER or shown on the Drawings or required or indicated.
   a. Chain link fence and gates as specified in this section.
   b. Orange safety fence.
   c. Barbed wire and metal gates as specified in Section 32 31 26, Wire Fences and Gates.
5. Barbed Wire Fence with Metal Gates: At locations where pipeline crosses existing fences and as shown on the Drawings.

6. Chain Link Fence with Chain Link Gates: At locations where pipeline crosses existing fences and as shown on the Drawings.
7. Gates: Use metal gates or chain link gates for intermediate gate openings on fencing where shown on the Drawings.

2.10 CONCRETE

A. Provide as specified in Section 03 30 10, Structural Reinforced Concrete.

PART 3 EXECUTION

3.01 GENERAL

A. Install chain link fences and gates in accordance with ASTM F567, except as modified in this section, and in accordance with fence manufacturer's recommendations, as approved by CONSTRUCTION MANAGER. Erect fencing in straight lines between angle points.

B. Provide necessary hardware for a complete fence and gate installation.

C. Repair damage to galvanized surfaces, including welding, with paint containing zinc dust in accordance with ASTM A780.

D. Drainage Crossings: Where the chain-link fence crosses drainage ditches or swales, carry the main fence across ditch or swale with additional fence added below.

1. Frames and Bracing: Fabricate the fence added below with galvanized round steel pipe conforming to the requirements for top and brace rails.
2. Weld or assemble the construction of the frame with corner fittings. The frame is to be rigid and to the extent necessary to maintain a 2-inch clearance between bottom of the frame and finish grade. If necessary to maintain rigidity, attach to the frame a series of 3/8-inch diameter galvanized steel pipe stakes that are embedded a minimum of 2 feet to the sides and bottom of the ditch.
3. Attach chain link fabric securely to frame at intervals not exceeding 12 inches.

3.02 PREPARATION

A. Establish locations of fence lines, gates, and terminal posts and prepare areas as approved by CONSTRUCTION MANAGER prior to installation.

3.03 POST SETTING

A. Drill or hand-excavate holes for posts to diameters and spacing indicated, in firm, undisturbed soil. Driven posts are not acceptable. Clear postholes of loose material. Remove waste materials from postholes from Site or regraded into slopes on Site in accordance with permit requirements.

B. Posthole Depth:

1. Minimum 3 feet below finished grade.
2. 2 inches deeper than post embedment depth below finish grade.

C. Set posts with minimum embedment below finished grade of 34 inches and with top rail at proper height above finished grade. Verify posts are set plumb, aligned, and at correct height and spacing. Brace posts, as necessary, to maintain correct position and plumbness until concrete sets.

D. Backfill postholes with concrete to 2 inches above finished grade. Vibrate or tamp concrete for consolidation. Protect above ground portion of posts from concrete splatter.

E. Before concrete sets, crown and finish top of concrete to readily shed water.

F. Terminal Posts: Locate terminal end, corner, and gate posts per ASTM F567 and terminal pull posts at changes in horizontal or vertical alignment of 15 degrees or more.

G. Line Posts: Space line posts uniformly at 10 feet on centers between terminal end, corner, and gate posts.

3.04 POST BRACING

A. Install according to ASTM F567, maintaining plumb position, and alignment of fencing. Install braces at gate, end, pull, and corner posts diagonally to adjacent line posts to ensure stability. Install braces on both sides of corner and pull posts.

1. Locate horizontal braces at mid-height of fabric or higher, on fences with top rail, and 2/3-fabric height on fences without top rail. Install so posts are plumb when diagonal truss rod assembly is under proper tension.

3.05 TOP RAILS

A. Install according to ASTM F567, maintaining plumb position and alignment of fencing. Run rail continuously through line post caps and terminating into rail end attached to posts or posts caps fabricated to receive rail at terminal

posts. Install top rail sleeves with springs at 105 feet maximum spacing to permit expansion in rail.

3.06 CHAIN LINK FABRIC

A. Do not install fabric until concrete has cured minimum 7 days.

B. Install fabric with twisted and barbed selvage at top.

C. Apply fabric to outside of enclosing framework. Pull fabric taut to provide a smooth and uniform appearance free from sag, without permanently distorting fabric diamond or reducing fabric height. Tie fabric to posts, rails, and tension wires. Anchor to framework so fabric remains under tension after pulling force is released.

D. Splice according to ASTM F1916 by weaving a single picket into the ends of the rolls to be joined.

E. Leave 2 inches between finish grade or surface and bottom selvage, unless otherwise indicated.

F. Tension or Stretcher Bars: Thread through fabric and secure to end, corner, pull, and gate posts with tension bands spaced not more than 15 inches on center.

G. Tie Wires: Fasten ties to wrap a full 360 degrees around rail or post and a minimum of one complete diamond of fabric. Twist ends of tie wire three full twists, and cut off protruding ends to preclude untwisting by hand.

1. Maximum Spacing: Tie fabric to line posts at 12 inches on center and to brace and top rails at 24 inches on center.

3.07 GATES

A. Install gates according to manufacturer's written instructions, level, plumb and secure for full opening without interference. Attach fabric and hardware to gate using tamper-resistant or concealed means. Adjust hardware for smooth operation and lubricate where necessary so gates operate satisfactorily from open or closed position.

B. Set gate stops in concrete to engage center drop rod or plunger bar.

3.08 ELECTRICAL GROUNDING

A. Ground fences at a maximum interval of 1,000 feet in accordance with applicable requirements of IEEE C2, National Electrical Safety Code.

B. Protection at Crossings of Overhead Electrical Power Lines: Ground fence at location of crossing and at a maximum distance of 150 feet on each side of crossing.

C. Grounding Method: At each grounding location, drive a grounding rod vertically until top is 6 inches below finished grade. Connect rod to fence with 6 AWG conductor. Connect conductor to each fence component at grounding location.

3.09 FIELD QUALITY CONTROL

A. Post and Fabric Testing: Test fabric tension and line post rigidity according to ASTM F1916.

B. Gate Tests:

1. Prior to acceptance of installed gates, demonstrate proper operation of gates under each possible open and close condition specified.
2. Adjust gate to operate smoothly, easily, and quietly, free of binding, warp, excessive deflection, distortion, nonalignment, misplacement, disruption, or malfunction, throughout entire operational range.
3. Confirm that latches and locks engage accurately and securely without forcing and binding.

3.10 WORK LIMITS AND ENVIRONMENTALLY SENSITIVE AREAS

A. Install Work Limits fence where shown on the Drawings.

B. Use fence to designate environmentally sensitive areas and/or Work Limits as required.

C. Do not use orange safety fence to prevent cattle from entering the construction area. In areas of cattle range, install wire fencing as specified that may be later removed in areas where wire fencing is not required as part of the Project.

D. Install Work Limits and environmentally sensitive area fencing prior to clearing and grubbing work.

E. Install fence as shown on the Drawings in a vertical, upright position.

F. Where used to designate environmentally sensitive areas, install the fence a sufficient distance from protected plants to enclose the foliage canopy and not encroach upon visible roots of the plants.

G. Removal of Fencing:

1. Remove fence from the Site when no longer needed for the Work, as determined by the CONSTRUCTION MANAGER.
2. Take ownership of removed fencing, except when reused.

3. Backfill holes or ground surface disturbed by the removal of the temporary fence, and restore surface to original grade.

H. Maintenance: Repair or replace fence that is damaged during the progress of the Work the same day as the damage occurred.

3.11 CLEANUP

A. Remove excess fencing materials and other debris from Site.

END OF SECTION

SECTION 32 31 26
WIRE FENCES AND GATES

PART 1 GENERAL

1.01 REFERENCES

A. The following is a list of standards that may be referenced in this section:

1. American Wood-Preservers' Association (AWPA):
   a. C1, Timber Products - Preservative Treatment By Pressure Processes.
   b. C2, Lumber, Timber, Bridge Ties and Mine Ties - Preservative Treatment By Pressure Processes.
   c. C5, Fence Posts-Preservative Treatment by Pressure Processes.
2. ASTM International (ASTM):
   a. A53, Standard Specification for Pipe, Steel, Black and Hot-Dipped, Zinc-Coated, Welded and Seamless.
   b. A121, Standard Specification for Zinc-Coated (Galvanized) Steel Barbed Wire.
   c. A123/A123M, Standard Specification for Zinc (Hot-Dip Galvanized) Coatings on Iron and Steel Products.
   d. A702, Standard Specification for Steel Fence Posts and Assemblies, Hot Wrought.
   e. A780, Standard Practice for Repair of Damaged and Uncoated Areas of Hot-Dip Galvanized Coatings.
3. American Association of State Highway and Transportation Officials (AASHTO).

1.02 DEFINITIONS

A. Assemblies: As defined in ASTM A702.

B. Line Posts: As defined in ASTM A702.

C. Sweep: Maximum deviation of center of post or brace from line drawn between centers of butt and tip of post or brace.

1.03 SUBMITTALS

A. Action Submittals:

1. Shop Drawings: Detailed information and specifications for fence and gate materials, cattle guards, temporary fencing, finishes, and dimensions.

2. Samples:
   a. Posts, Rails, and Braces: Minimum 6-inch length.
   b. Barbed Wire: Minimum 12-inch length.
   c. Ties, Fasteners, Fittings: One each.
   d. Approved Sample fittings may be incorporated in the Work when no longer needed by ENGINEER.
3. Installation procedures.

1.04 QUALITY ASSURANCE

A. Erect fencing using skilled labor experienced in wire fence and gate construction.

1.05 SCHEDULING AND SEQUENCING

A. Complete necessary Site preparation and grading before installing wire fences and gates.

PART 2 PRODUCTS

2.01 GENERAL

A. Tag fencing materials and gates identifying manufacturer.

B. Legibly mark each roll of fencing material with style, class of zinc coating, and other pertinent identifying information.

C. Manufactured Materials: Same kind and color for each type of fence on Site.

2.02 BARBED WIRE

A. Zinc-Coated Barbed Wire: ASTM A121, Standard Grade.

1. Line Wire: Two strands of No. 12-1/2 gauge.
2. Barbs:
   a. Number of Points: Two.
   b. Length: 1 inch.
   c. Shape: Either round or half-round.
   d. Diameter: No. 14 gauge.
   e. Spacing: 5 inches.

2.03 VERTICAL FENCE STAYS

A. 9-1/2-gauge, galvanized wire; 40 inches long.

2.04 METAL POSTS AND ASSEMBLIES

A. Metal:

1. General: Conform to ASTM A702.
2. Line Post Section: T-section.
3. Wire Attachments: Conform to ASTM A702; do not furnish posts with punched tabs for fastening wires to post by closing tabs.
4. Finish:
   a. Painted and baked on.
   b. Color: Green with white top.

2.05 WOOD POSTS AND BRACES

A. General:

1. Cut from sound timber.
2. Free from bark and protruding knots.
3. Straight; free from sweep exceeding 1.67 percent of post length, not to exceed maximum 2 inches; free from multiple crooks. Acceptable crooks may be in one plane only.
4. Free from loose or unsound knots, shakes in excess of 1/3 post thickness, splits longer than post thickness, or other defects that would render them unfit structurally for purpose intended.
5. Dry and seasoned; small surface seasoning checks are acceptable.
6. Square or Rectangular Posts and Braces:
   a. Rough sawn, S4S, or S2S.
   b. Free of heart center.

B. Untreated Wood Posts and Braces:

1. Species: Cedar, Redwood, or Douglas Fir.
2. Line Posts:
   a. May be split material.
   b. Perimeter: Minimum 16 inches.
   c. No dimension less than 4 inches.
3. End, Corner, and Brace Posts:
   a. Sawed or hewn.
   b. Nominal Size: Not less than 6 inches by 6 inches

C. Treated Wood Posts and Braces:

1. Round, Half-Round, and Quarter-Round Posts and Braces:
   a. Species: Limited to those addressed by AWPA C5; Douglas Fir, Western Hemlock, and Western Larch as round posts only.
   b. Treatment: In conformance with AWPA C1 and AWPA C5.

2. Posts and Braces Sawn on Four Sides:
   a. Species: Limited to those addressed by AWPA C2 for above ground, soil, and freshwater use.
   b. Treatment: In conformance with AWPA C1 and AWPA C2

2.06 WIRE FASTENERS FOR METAL POSTS

A. Conform to ASTM A702.

2.07 TENSION WIRE

A. No. 9 or heavier, zinc-coated, soft smooth wire.

2.08 NAILS AND SPIKES

A. Hot-dipped zinc-coated of best commercial quality, and of proper length.

2.09 WIRE FENCE STAPLES

A. Formed of No. 9 zinc-coated steel wire 1-1/2 inches long.

2.10 METAL GATES

A. Type: As shown in the Drawings.

B. Frame:

1. Tubular steel conforming to ASTM A53.
2. Six-rail, 2-inch diameter, 16-gauge minimum.

C. Design: To fit opening between gate posts and be able to swing level through an arc of 90 degrees inward and 90 degrees outward, unless otherwise shown.

D. Width and Height: As shown in the Drawings.

E. Fittings:

1. Furnish complete with galvanized fittings designed for use with type of gate and gate post provided.
2. Furnish with galvanized chain.

F. Posts:

1. Wood: 8-inch square, 8-foot length.
2. Galvanized Tubular Steel: 12-gauge, 4-inch diameter, 8-1/2-foot length, concrete-filled with grout cap.

2.11 GROUND RODS

A. Galvanized or copper-coated steel rod.

B. Length: 8 feet.

C. Diameter: Minimum 1/2-inch.

2.12 TEMPORARY FENCING

A. Use fences in accordance with the following provisions and as shown on the Drawings.

B. Orange Safety Fence: As specified in Section 32 31 13, Chain Link and Orange Safety Fences and Gates.

C. Fasteners:

1. Tie wire or locking plastic fasteners.
2. Maximum spacing of the fasteners along the steel post to be 24 inches.

D. Barbed Wire Fence: As specified in this specification.

E. Chain Link Fence: As specified in Section 32 31 13, Chain Link and Orange Safety Fences and Gates.

2.13 USE OF FENCE AND GATES TYPES

A. Use fence and gate types in accordance with Section 32 31 13, Chain Link and Orange Safety Fences and Gates, unless otherwise shown on the Drawings:

PART 3 EXECUTION

3.01 GENERAL

A. Replace existing fences disturbed by construction activities with similar fence type and height.

B. Install gates where shown on the Drawings. Where fences cross the pipeline alignment, gate to be centered over pipeline alignment, unless noted otherwise.

C. Temporary Fencing:

1. Intermediate post assemblies at 350-foot spacing are not required except at intermediate gate openings.
2. Locate intermediate gate openings as directed by CONSTRUCTION MANAGER at locations of existing access crossings and as accepted by CONSTRUCTION MANAGER.

D. Preparation:

1. Establish locations of fence lines and gates where shown on the Drawings.
2. Notify CONSTRUCTION MANAGER after locations of fence lines, gates, and intermediate end posts are staked and before proceeding with fence installation.
3. Clear area to extent specified in Section 31 10 00, Site Clearing. Eliminate ground surface irregularities along fence line to extent necessary to maintain 2-inch clearance between bottom of wire fence fabric and finish grade.

E. Connections:

1. At Junctions or Intersections:
   a. Install corner post with braces in every direction of strain for connections at each fence junction or intersection.
   b. Fasten wire of both new and existing fence segments to post.
2. At Structures: Install end post and fasten wire to post.

3.02 LINE POST INSTALLATION

A. Line Post Spacing: As shown. Set posts on lines and grades as approved by CONSTRUCTION MANAGER. When posts are set, grade line on tops of posts with a neat, uniform appearance.

B. Line posts that are set by driving must be free of damage when in place. Remove and replace with a new post any post which is twisted or bent, or which has a misshapened top.

3.03 WOOD POST INSTALLATION

A. Set posts plumb and in good line on side on which wire is to be fastened as follows:

1. Set posts full depth of 36 inches. Do not cut off bottoms to avoid rock removal or additional excavation.
2. Cut butt end of post square.
3. Diameter of Post Holes: Minimum 6 inches larger than diameter of posts.

B. Set corner posts at angle points in fence alignment where deflection angle between adjoining panels of fence is 5 degrees or more for metal line posts and 15 degrees or more for wood line posts.

C. Spacing intermediate end posts between end, gate, and corner posts maximum 1,000 feet apart.

D. After posts are placed and aligned, backfill holes with suitable earth material and compact with hand tampers. Mound excess earth around post to provide natural drainage.

E. Where tension wires are indicated on corner, intermediate end, or gate posts, attach by notching post and fixing tension wire in place as shown.

3.04 WOOD BRACING FOR INTERMEDIATE END POSTS AND GATE POSTS

A. Brace intermediate end and gate posts with 4-inch by 4-inch bracing. Notch posts, fit braces in securely, and lock in place with 3/8-inch by 6-inch steel dowels. Complete wood bracing before attaching barbed wire.

3.05 DRAINAGE CROSSINGS

A. Where fence crosses drainage ditches or swales, carry the main fence across a ditch or swale with additional fence added below.

B. Assemble frame with galvanized bolts. Frame to be rigid and to maintain 12-inch clearance between bottom of frame and finish grade. If necessary to maintain rigidity, attach to frame a series of 3/8-inch diameter galvanized steel pipe stakes that are embedded a minimum of 2 feet to sides and bottom of ditch.

C. Attach wire securely to frame at intervals not exceeding 12 inches.

3.06 BARBED WIRE INSTALLATION

A. Draw barbed wire tight and securely attach posts. Attach to side of post outside of enclosure.

1. Terminate barbed wire at each end post, gate post, corner post, and intermediate end post.
2. Wrap each line of barbed wire around terminating post and splice to itself with at least four turns.
3. Securely fasten each line of barbed wire at each metal line post with galvanized wire ties or clips.
4. Securely fasten each line of barbed wire at each wood post with wire fence staples.

B. Splices of barbed wire between terminating posts will be permitted provided no more than one splice occurs between two adjacent terminating posts. Splices to be connected by looping the ends together and twist on to each other.

C. In final position, barbed wire to be tight and free from sag, bends, and kinks.

D. In crossing gullies, ditches, and abrupt depressions where bottom line of fence as normally constructed leaves an unfenced opening beneath it exceeding 12 inches in height, add an additional line of barbed wire, so that at no point along fence will there be side openings or bottom openings exceeding 12 inches in dimension.

E. Fence Condition Upon Completion: Straight between corners.

1. Posts: Vertical and firmly set.
2. Braces, Fittings, and Fixtures: Tight and firm.

3.07 VERTICAL FENCE STAYS

A. Install midway between posts. Twist wire to permit weaving into horizontal fence wires to provide rigid spacing. Weave barbed wires into stay.

3.08 GATE INSTALLATION

A. Install gates with faces plumb and top level and so gate will swing freely and level, without binding, through an arc of 90 degrees outward. Adjust grade within area of gate swing if necessary, and as approved by CONSTRUCTION MANAGER, to prevent gate from dragging on ground.

B. Install gate at each location shown and where fences cross construction trails or access roads and where adequate gates do not exist.

C. Install hinges and hardware as recommended by gate manufacturer. Weld or secure hinge pins, and hardware to prevent removal.

3.09 GROUNDING

A. General:

1. Ground fence fabric and barbed wire wherever fences are supported by wood line posts by substituting metal post for wood post at intervals not to exceed 500 feet with not less than one metal post between openings.
2. Tightly fasten each line of barbed wire and alternate longitudinal wire of fence fabric to metal posts with 11-gauge, or heavier, galvanized steel wire.

B. Overhead Powerlines:

1. At each location where electric transmission, distribution, or secondary line crosses fence, ground fence with ground rod installed directly below point of crossing.
2. At each line where powerline is parallel or nearly parallel to and within 100 feet of fence, ground fence with ground rod at each end post or at intervals not to exceed 1,500 feet.

3. Drive ground rods vertically until top of rod is 6 inches below finished grade. If required vertical penetration cannot be achieved, install equivalent horizontal grounding system, as approved by CONSTRUCTION MANAGER.
4. Connect each fence element to grounding rod with No. 6 solid copper conductor, or equivalent. Braze connections or use noncorrosive clamps, as approved by CONSTRUCTION MANAGER.

3.10 REPAIR

A. Repair damage to galvanized surfaces, including welding, with paint containing zinc dust in accordance with ASTM A780.

3.11 WORK LIMITS AND ENVIRONMENTALLY SENSITIVE AREAS

A. Install Work Limits fence where shown on the Drawings.

B. Use fence to designate environmentally sensitive areas and/or Work Limits as required.

C. Do not use orange safety fence to prevent cattle from entering the construction area. In areas of cattle range, install wire fencing as specified that may be later removed in areas where wire fencing is not required as part of the Project.

D. Install Work Limits or environmentally sensitive area fencing prior to clearing and grubbing work.

E. Install fence as shown on the Drawings in a vertical, upright position.

F. Where used to designate environmentally sensitive areas, install orange safety fence a sufficient distance from protected plants to enclose the foliage canopy and not encroach upon visible roots of the plants.

G. Removal of fencing:

1. Remove fence from the Site when no longer needed for the Work, as determined by the CONSTRUCTION MANAGER.
2. Backfill holes or ground surface disturbed by the removal of the temporary fence, and restore surface to original grade.

H. Maintenance: Repair or replace fence that is damaged during the progress of the Work the same day as the damage occurred.

END OF SECTION

SECTION 32 91 13
SOIL PREPARATION

PART 1 GENERAL

1.01 WORK

A. The extent of Work is to prepare and stabilize the disturbed areas for revegetation to be completed under a separate contract.

1.02 SEQUENCING AND SCHEDULING

A. Perform Work specified in Section 31 23 13, Subgrade Preparation, and Section 31 23 23.15, Trench Backfill, prior to performing Work specified under this section.

B. Mulch and Erosion Control Blanket: Install no later than 10 days after soil preparation and finished grading is complete.

1.03 SUBMITTALS

A. Straw Mulch.

1. Certificates of inspection of mulch by state or federal authorities.
2. Certificates of weed-free mulch.
3. Copies of delivery invoices or other proof of quantities of mulch.
4. Samples.

B. Erosion control blanket.

PART 2 PRODUCTS

2.01 TOPSOIL

A. Stockpiled strippings of topsoil in accordance with Section 31 10 00, Site Clearing.

B. Topsoil Weed Control:

1. As specified in Section 01 57 17, Temporary Weed Control.
2. Weeds not specified in Section 01 57 17, Temporary Weed Control:
3. Spray with Roundup® at manufacturer's recommended rates, 7 calendar days prior to soil preparation.
4. Do not spray during windy conditions.
5. Repeat spraying as needed to preclude noxious weeds.

2.02 STRAW MULCH

A. As Specified in 01 57 22, Temporary Stormwater Pollution, Erosion, and Sediment Control.

2.03 EROSION CONTROL BLANKET

A. As specified in 01 57 22, Temporary Stormwater Pollution, Erosion, and Sediment Control.

PART 3 EXECUTION

3.01 SUBGRADE PREPARATION

A. Scarify subgrade to minimum depth of 12 inches where topsoil is to be placed.

B. Remove stones over 2-1/2 inches in any dimension, sticks, roots, rubbish, and other extraneous material.

C. Limit preparation and construction activities to areas which will receive topsoil within 2 days after preparation.

3.02 TOPSOIL OR STREAM RESTORATION MATERIAL PLACEMENT

A. Do not place topsoil when subsoil or topsoil is frozen, excessively wet, or otherwise detrimental to the Work.

B. Place topsoil to match preconstruction conditions. Uniformly distribute topsoil and fine grade to eliminate rough or low areas and maintaining levels, profiles, and contours of subgrade.

C. Remove stones exceeding 1-1/2 inches, roots, sticks, debris, and foreign matter during and after topsoil placement.

D. Remove surplus subsoil and topsoil from Site. Grade stockpile area as necessary and place in condition acceptable for planting or seeding.

3.03 SURFACE STABILIZATION

A. Erosion Control Blankets

1. Install Erosion Control Blankets after soil preparation and finished grading is complete.
   a. Place on slopes 3H:1V and steeper.
   b. As specified in 01 57 22, Temporary Stormwater Pollution, Erosion, and Sediment Control.

B. Mulching:

1. Place on slopes less than 3H:1V.
2. After soil preparation, install mulch by hand or mechanical means to uniformly to minimum depth of 2 inches at a rate of 2 tons/acre.
3. Crimp mulch within four hours after application.

3.04 FIELD QUALITY CONTROL

A. Notify CONSTRUCTION MANAGER when Work under this Section is complete.

B. Participate with CONSTRUCTION MANAGER in an inspection of prepared and stabilized area.

C. Repeat soil preparation and surface stabilization for areas determined to be not acceptable final condition as directed by CONSTRUCTION MANAGER.

END OF SECTION

SECTION 33 05 01.02
WELDED STEEL PIPE AND FITTINGS—WELD BEFORE BACKFILL

PART 1 GENERAL

1.01 THE REQUIREMENT

A. Provide lined and coated welded steel pipe, specials, and fittings as specified herein, complete, in accordance with the Contract Documents. Refer to Section 40 27 00, Process Piping—General, for other pipe materials.

B. Where indicated on the Drawings, provide double lap welded joints or complete joint penetration butt welds in accordance with this section.

1.02 REFERENCES

A. The following is a list of standards which may be referenced in this section:

1. American Society of Mechanical Engineers (ASME):
   a. B16.47, Large Diameter Steel Flanges, NPS 26 though NPS 60.
   b. B16.5, Pipe Flanges and Flanged Fittings, NPS 1/2 through NPS 24.
   c. B16.9, Factory-Made Wrought Steel Buttwelding Fittings.
   d. B36.10M, Welded and Seamless Wrought Steel Pipe.
   e. BPVC SEC V, Nondestructive Examination.
   f. BPVC SEC VIII, Div. 1, Rules for Construction of Pressure Vessels.
   g. BPVC SEC IX, Qualification Standard for Welding and Brazing Procedures, Welders, Brazers, and Welding and Brazing Operators.
2. American Society for Nondestructive Testing Inc. (ASNT): SNT-TC-1A, Personnel Qualification and Certification in Non-Destructive Testing.
3. American Water Works Association (AWWA):
   a. C200, Steel Water Pipe – 6 inch (150 mm) and Larger.
   b. C205, Cement-Mortar Protective Lining and Coating for Steel Water Pipe - 4 in. (100 mm) and Larger - Shop Applied.
   c. C206, Field Welding of Steel Water Pipe.
   d. C207, Steel Pipe Flanges for Waterworks Service - Sizes 4 in. Through 144 in. (100 mm Through 3,600 mm).
   e. C208, Dimensions for Fabricated Steel Water Pipe Fittings.
   f. C209, Cold-Applied Tape Coatings for the Exterior of Special Sections, Connections, and Fittings for Steel Water Pipelines.
   g. C210, Liquid-Epoxy Coating Systems for the Interior and Exterior of Steel Water Pipelines.

h. C213, Fusion-Bonded Epoxy Coating for the Interior and Exterior of Steel Water Pipelines.
i. C214, Tape Coating Systems for the Exterior of Steel Water Pipelines.
j. C215, Extruded Polyolefin Coatings for the Exterior of Steel Water Pipelines.
k. C216, Heat-Shrinkable Cross-Linked Polyolefin Coatings for the Exterior of Special Sections, Connections, and Fittings for Steel Water Pipelines.
l. C218, Coating the Exterior of Aboveground Steel Water Pipelines and Fittings.
m. C219, Bolted, Sleeve-Type Couplings for Plain-End Pipe.
n. C221, Fabricated Steel Mechanical Slip-Type Expansion Joints.
o. C222, Polyurethane Coatings for the Interior and Exterior of Steel Water Pipe and Fittings.
p. C602, Cement-Mortar Lining of Water Pipelines in Place – 4 in. (100 mm) and Larger.
q. C604, Installation of Steel Water Pipe – 4 In. (100 mm) and Larger.
r. M11 (Manual), Steel Water Pipe - A Guide for Design and Installation.

4. American Welding Society (AWS):
   a. A2.4, Standard Symbols for Welding, Brazing, and Nondestructive Examination.
   b. A3.0, Standard Welding Terms and Definitions.
   c. D1.1, Structural Welding Code – Steel.
   d. QC 1, Standard for AWS Certification of Welding Inspectors.
5. ASTM, International (ASTM):
   a. A20, Standard Specification for General Requirements for Steel Plates for Pressure Vessels.
   b. A36//A36M-08 Standard Specification for Carbon Structural Steel.
   c. A53/A53M, Standard Specification for Pipe, Steel, Black and Hot-Dipped, Zinc-Coated, Welded and Seamless.
   d. A106, Standard Specification for Seamless Carbon Steel Pipe for High-Temperature Service.
   e. A234/A234M, Standard Specification for Piping Fittings of Wrought Carbon Steel and Alloy Steel for Moderate and High Temperature Service.
   f. A283/A283M, Standard Specification for Low and Intermediate Tensile Strength Carbon Steel Plates.
   g. A370, Standard Test Methods and Definitions for Mechanical Testing of Steel Products.
   h. A435/A435M, Standard Specification for Straight-Beam Ultrasonic Examination of Steel Plates.

i. A516/A516M, Standard Specification for Pressure Vessel Plates, Carbon Steel, for Moderate- and Lower-Temperature Service.
j. A770/A770M, Standard Specification for Through-Thickness Tension Testing of Steel Plates for Special Applications.
k. A1018/A1018M, Standard Specification for Steel, Sheet and Strip, Heavy Thickness Coils, Hot Rolled, Carbon, Commercial, Drawing, Structural, High-Strength Low-Alloy, and High-Strength Low-Alloy with Improved Formability.
l. D4541, Standard Test Method for Pull-Off Strength of Coatings Using Portable Adhesion Testers.
m. E23, Standard Test Methods for Notched Bar Impact Testing of Metallic Materials.
n. E329, Standard Specification for Agencies Engaged in the Testing and/or Inspection of Materials Used in Construction.

6. International Organization for Standardization (ISO).
7. NSF International (NSF):
   a. 60, Drinking Water Treatment Chemicals - Health Effects.
   b. 61, Drinking Water System Components - Health Effects.
8. Steel Pipe Fabricators Association (SFPA).

1.03 DEFINITIONS

A. Fittings and Specials: Including, but not limited to fittings, closure pieces, bends, elbows, reducers, tees, wyes, bifurcations, crosses, outlets, manifolds, nozzles, wall sleeves, bulkheads, vent pipes, and other piping and appurtenances fabricated from steel plate, sheet, or coils as required to provide the Work, complete. Specials shall also include piping above ground or inside structures.

B. Main Pipe Supplier: Manufacturer of the pipeline and as further defined in Paragraph 2.01.A.

C. Acronyms:

1. CJP: Complete Joint Penetration.
2. CWI: Certified Welding Inspector.
3. LHA: Lining holdback area.
4. LT: Leak Testing.
5. MPS: Main pipe supplier.
6. MT: Magnetic Particle Testing.
7. NDE: Nondestructive Examination.
8. NDT: Nondestructive Testing.
9. PJP: Partial Joint Penetration.
10. PQR: Procedure Qualification Record.
11. PT: Liquid Penetrant Testing.
12. RT: Radiographic Testing.

13. UT: Ultrasonic Testing.
14. VT: Visual Testing.
15. WPQ: Welder/Welding Operator Performance Qualification.
16. WPS: Welding Procedure Specification.

1.04 DESIGN REQUIREMENTS

A. Fittings and Specials:

1. Design reinforcement, unless otherwise shown.
2. Design in accordance with AWWA Manual M11, AWWA C200, AWWA C208 and this Specification, except for nozzles, dished heads, and test heads. Design nozzles, dished heads, and test heads in accordance with ASME Boiler and Pressure Vessel Code, Section VIII, Division 1.
3. Submit design calculations for review prior to manufacture of steel pipe fabricated specials. See Subparagraph 1.05.C.6.
4. For the purposes of design calculations, the following are defined:
   a. Working Pressure (psi):
      [Maximum Working HGL (feet) + 105 feet – Pipe Centerline Elevation (feet)] x 0.433
   b. Test Pressure (psi):
      [Maximum Test HGL (feet) – Pipe Centerline Elevation (feet)] x 0.433
5. Design elbows for working and test pressures using allowable stresses of 50 percent yield strength and 62.5 percent of yield strength, respectively.
6. Design outlet reinforcing for working pressure using an allowable stress of 50 percent of yield strength.
7. Design nozzles, dished heads, and test heads for test pressure in accordance with ASME Boiler and Pressure Vessel Code, Section VIII, Division 1.

B. Pipe Layout: Design complete pipeline layout, in accordance with AWWA Manual M11:

1. General:
   a. Horizontal and Vertical Alignment: See Contract Drawings.
   b. Base stationing and elevation convention as shown on Drawings.
   c. Laying Lengths:
      1) Minimum: 40-foot standard barrel length. Shorter lengths are allowed as necessary to meet alignment, grade, and utility clearance tolerances.

2) Maximum: Not limited, unless specifically shown. Coordinate with requirements of Section 26 42 02, Galvanic Anode Cathodic Protection System.
3) Select lengths to accommodate installation operation.

2. Include, as Minimum:
   a. Specific number, location, and direction of each pipe, joint, and fitting or special. Number each pipe in installation sequence.
   b. Station and centerline elevation at changes in grade or horizontal alignment.
   c. Station and centerline elevation to which bell end of each pipe will be laid.
   d. Elements of curves and bends, both in horizontal and vertical alignment.
   e. Location of mitered pipe sections, beveled ends and/or pulled joints for alignment conformance, butt straps, and deep bell lap joints for temperature stress control.
   f. Location of closures, cutoff sections for length adjustment, temporary access manways, vents, and weld lead outlets for construction convenience.
      1) Provide for adjustment in pipe laying headings and to conform to indicated stationing.
      2) Changes in location or number will require ENGINEER approval.
   g. Location of bulkheads, both those shown and as required, for hydrostatic testing of pipeline.

C. Welding Procedure Specification (WPS):

1. Qualified by testing in accordance with ASME BPVC SEC IX for shop welding and AWS D1.1 for field welding.
2. PQRs conducted on unlisted base metal (most coil products are unlisted base metals) to be production welded as required in the referenced welding Code shall be traceable to heat lots.
3. Written WPS required for welds, both shop and field.
4. Notch-tough welding procedures that require heat input control is required for welding of pipe and/or crotch plates with thickness equal to 7/16-inch or greater:
   a. AWS D1.1 prequalified welding procedures are not allowed.
   b. WPS used to shop fabricate pipe shall be qualified in accordance with ASME BPVC SEC IX and shall include Supplementary Essential Variables.
   c. Qualify WPS used to install pipe in the field for heat input control in accordance with AWS D1.1.

d. PQRs shall be qualified for notch tough welding with consideration for thickness of steel, test temperature, and Charpy V-notch CVN values. Refer to AWS D1.1, Table 4.6 for PQR Supplementary Essential Variables and Section 4, Part D Requirements for CVN Testing, Option A (three specimens). The CVN test temperature and acceptance shall be the same as pipe base metal specified herein.

D. Stulling (Strutting): Design stulling for pipe, specials, and fittings such that over-deflection and damage is avoided during handling, storage, and installation, including backfill and compaction.

1.05 SUBMITTALS

A. Shop Drawings: Submit shop drawings of steel pipe, specials and fittings in accordance with the requirements in Section 01 33 00, Submittal Procedures, and the following supplemental requirements as applicable. Submittals for steel pipe and steel pipe specials shall be prepared and submitted by a single pipe supplier only. The supplier responsible for preparation of the material shall be the MPS.

B. Action Submittals:

1. Shop Drawings showing pipe layout as described in Paragraph 1.04.B, Pipe Layout.
2. Material list and steel reinforcement schedules for materials specified.
3. Fabrication Information:
   a. Pipe and fitting details for temporary and permanent facilities indicating:
      1) Cylinder thickness.
      2) The position, type, size and area of reinforcement.
      3) Manufacturing tolerances.
      4) Maximum angular deflection limitations of field joints.
      5) Closure sections and cutoffs for field length adjustment.
      6) Bulkheads, including details for removal of test bulkheads and repair of lining.
      7) Weld lead outlets and plugs.
      8) Stulling size, spacing, and layout.
      9) Other pertinent information required for the manufacture and installation of the product.
   b. Welded joint details including:
      1) Butt joints.
      2) Miter-cut ends for alignment conformance.
      3) Lap joints.

4) Deep bell lap joints required for control of temperature stresses.
5) Butt strap joints.

4. Welding Data (Shop and Field Welding):
   a. Show on a weld map, location, type, size, and extent of welds with reference called out for WPS and NDE numbers in tail of welding symbol.
   b. Distinguish between shop and field welds.
   c. Indicate, by welding symbols or sketches, details of welded joints and preparation of base metal.
   d. Welding and NDE symbols in accordance with AWS A2.4.
   e. Welding terms and definitions in accordance with AWS A3.0.
   f. Submit welding data together with Shop Drawings as a complete package.
5. Product data for the following:
   a. Pipe Barrel:
      1) Material data.
      2) Chemical and physical test reports showing data consistent with specified requirements for each heat of steel proposed for use with pipe, fitting, and special.
   b. Coatings and Linings:
      1) Technical data sheets itemizing chemical composition, technical and performance information that indicates compliance with this Specification.
      2) Color chart, if applicable.
      3) Manufacturer's name, product number or name, and thickness.
   c. Flanged Joints:
      1) For Each Flanged Connection: Reference standard, dimensional data, bolt hole number, pattern and diameter, bolt diameter and length, face condition (raised only allowed).
      2) Gaskets and Bolting: Technical data sheets itemizing chemical composition, technical and performance information that indicates compliance with this Specification.
   d. Wall Sleeves: Dimensional data, including sleeve length, thickness, and diameter.
6. Pipe handling equipment and methods for loading and unloading pipe.

C. Informational Submittals:

1. Certificates:
   a. In accordance with Section 01 43 33, Manufacturers' Field Services, Manufacturer's Certificate of Compliance that products furnished meet requirements of this Specification.

b. Lining Materials: Certificate that lining system is currently approved for potable water contact in accordance with NSF 61 and satisfies current applicable governmental health and safety requirements for use in potable water.

c. Steel Pipe Installation: Certificate that training has been provided to CONTRACTOR's installation crews regarding proper pipe handling and storage procedures in accordance with Section 01 43 33, Manufacturers' Field Services.

2. MPS's written Quality Assurance/Control (QA/QC) Plan: The MPS's QA/QC program shall ensure the achievement of adequate quality throughout applicable areas of the Contract as specified under Paragraph 1.06.

3. Statements of Qualification:

a. Pipe manufacturer.

b. Fittings and specials fabricator.

c. Welders or Welding Operators:

1) Name of welder.

2) Welding procedures/positions for which welder is qualified to weld.

3) Assigned certification stamp number.

4) Certification date.

5) Current certification status.

d. Certified Welding Inspector (CWI) for shop welding and CWI for field welding.

e. NDT Quality Control Personnel.

4. Procedures:

a. Shop and field welding information: At a minimum include a complete welding code paper trail with linkage to Shop Drawings that includes the following:

1) Written WPS and PQR.

a) Provide complete joint dimensions and details showing bevels, groove angles, root face, and root openings for welds.

b) Notch-tough welding is required when steel thickness exceeds 7/16-inch. For shop welding, address supplementary essential variables in addition to essential variables as indicated in ASME Section IX, QW-251.2. For field welding, heat-input, control PQR essential variables as indicated in AWS D1.1, Table 4.6 shall be included. For shop and field welding, provide heat-input table on WPSs for welder guidance.

c) PQRs for notch-tough welding shall document heat-input control by monitoring volts, amps, and travel speed or time-rate of change of weld metal volume as calculated by measuring change in

electrode length over a period of time. Conduct Charpy V-notch tests on weld metal and heat affected zone. Orient test coupons transverse to final direction of rolling. Full size Charpy specimen test acceptance to be same as base metal specified herein.

2) Written NDT procedures.
3) Current WPQ.

b. Written description of proposed sequencing of events or special techniques including:
1) Control of pipe wall temperature stress during installation.
2) Minimizing distortion of steel.
3) Monitoring pipeline temperatures during installation.
4) Shop-Applied Cement-Mortar Lining: Include description of machine to be used and list of similar project where machine was used. Identify pipe size and total footage.
5) Field coating application and repair.
6) Field lining application, repair, and moisture control in accordance with AWWA C602 or AWWA C222.

5. Safety Plan for Working Near High Voltage AC Powerlines: Include monitoring and mitigation of electrostatic and electromagnetic coupling during installation of the pipeline and safe work practices associated with construction activities near high voltage ac powerlines in accordance with OSHA 1926.550(a)(15).

6. Design Calculations:
a. Fittings and Specials: Design calculations for fittings and specials including outlet reinforcement details of collars, nozzles, wrappers, and crotch plates as required. Calculations to be sealed by a Colorado Registered Professional Engineer.

7. Reports:
a. Source Quality Control Test Reports:
1) Hydrostatic testing.
2) Destructive weld testing.
3) Nondestructive weld testing.
4) Steel impact testing using Charpy V-notch method.
5) Letter from independent testing agency certifying that pipe furnished meets the requirements of this Specification.

b. Field Quality Control Test Reports:
1) Weld tests, including initial weld examination and re-examination of repaired welds, on each weld joint for the following tests, as applicable:
a) Visual Testing (VT).
b) Radiographic Testing (RT).
c) Ultrasonic Testing (UT).
d) Magnetic Particle Testing (MT).
e) Liquid Penetrant Testing (PT).

2) Coating and lining site visit letter by qualified technical representative.
3) Applicator's quality control records, including environmental conditions, dry film thickness, and adhesion tests, when requested by CONSTRUCTION MANAGER.

c. Cement-mortar lining compressive strength tests in accordance with AWWA C205.
d. Cement-mortar coating absorption tests in accordance with AWWA C205.
e. Field-applied cement mortar lining moisture control in accordance with AWWA C602.

8. Field Testing Plan: Submit at least 15 days prior to testing and include at least the following information:
a. Testing dates.
b. Piping system and sections to be tested.
c. Method of isolation.
d. Method of conveying water from source to system being tested.
e. Calculation of maximum allowable leakage for piping sections to be tested.

1.06 QUALITY ASSURANCE

A. Qualifications:

1. Pipe Manufacturer:
a. Experienced in fabricating pipe of similar diameters, lengths, and wall thickness required for the Work.
b. Steel Pipe Fabricators Association (SPFA), Lloyd's Registry Certification, or ISO 9000 Certification.
c. Demonstrate current production capability for volume of work required for this Project.
d. Experience to include successful fabrication to AWWA C200 standards of at least:
1) 100,000 linear feet of 60-inch diameter or larger pipe, with wall thickness of 0.25 inches or greater, within past 5-year period.
2) 5,000 linear feet of 60-inch diameter or larger pipe, with wall thickness of 0.625 inches or greater, within the past 5-year period.
e. Experience to be applicable to fabrication plant facilities and personnel, not company or corporation that currently owns fabrication facility or employs personnel.

2. Fittings and Specials Fabricator:
a. Experienced in fabricating fittings and specials of similar diameters and wall thickness required for the Work.

b. Steel Pipe Fabricators Association (SPFA), Lloyd's Registry Certification, or ISO 9000 Certification.
c. Demonstrate current production capability for volume of work required for this Project.
d. Experience to include successful fabrication to AWWA C200/C208 standards of at least 100 fittings of 66-inch or larger pipe, with wall thickness 0.375 inch or greater, within past 5-year period.
e. Experience to include successful fabrication of at least five crotch plate fittings or specials within past 5-year period.
f. Experience to be applicable to fabrication shop facilities and personnel, not company or corporation that currently owns fabrication facility or employs personnel.

3. Welders and Welding Operators:
   a. Shop Welders: In accordance with ASME BPVC SEC IX or AWS D1.1.
   b. Field Welders: In accordance with AWS D1.1.
4. Certified Welding Inspector (CWI):
   a. In accordance with AWS QC 1, with knowledge of appropriate welding code for the Work.
   b. After receiving CWI qualification, at least one Shop CWI and one Field CWI shall have 5 years minimum of professional experience related to welding inspection similar to the Work. Other CWIs may work under the supervision of this 5-Year CWI, provided that they have a minimum of 1 year of related professional experience as a CWI.
5. NDT Quality Control Personnel:
   a. In accordance with requirements of Recommended Practice No. SNT-TC-1A, Level II.
   b. After receiving NDT qualification, at least one NDT inspector shall have 5 years minimum professional experience related to NDT inspection similar to the Work. Other Level II NDT inspectors may work under the supervision of this 5-year inspector, provided they have 1 year minimum related professional experience as a Level II inspector.

B. Certified Welding Inspector (CWI) For Shop Welding:

1. Provide full-time CWI during shop welding.
2. In accordance with AWWA C200 and as follows.
3. Responsibilities:
   a. Verify conformance to use of specified materials and their proper storage.
   b. Monitor conformance to approved WPS.
   c. Monitor conformance to approved NDT procedure specifications.
   d. Monitor conformance of WPQ.

e. Provide 100 percent visual inspection before, during, and after shop welding.
f. Coordinate NDT work and review test results.
g. Maintain records and prepare report confirming results of inspection and testing.

C. Field Welder Qualifications: Field welding procedures, welders and welding operators shall be qualified in accordance with AWS D1.1. Qualifications shall be in accordance with all-position pipe tests as defined in Section 4 of AWS D1.1.

D. Certified Welding Inspector (CWI) For Field Welding:

1. UTILITIES testing agency will provide a CWI for Verification Inspection in accordance with AWS D1.1, Section 6.1.2.2.
2. The CONTRACTOR shall provide a welding inspector to perform visual inspection duties before, during and after welding in accordance with the requirements of AWS D1.1, Sections 6.1.3.1, 6.1.4 and 6.6.1. The presence of the UTILITIES testing agency CWI does not relieve the CONTRACTOR from these code required quality control duties for welding inspection.

E. Prefabrication Meeting: Hold prior to fabrication of pipe, fittings, or specials between representatives of UTILITIES, CONTRACTOR, CONSTRUCTION MANAGER, ENGINEER, and pipe fabricator to review the following:

1. Project scope.
2. Submittal requirements.
3. Testing.
4. Inspection responsibilities.
5. Shop welding requirements.
6. Field welding requirements.
7. Shop and field coating and lining requirements.
8. Production and delivery schedule.
9. Other issues pertinent to the Work.

F. Inspection of Coating and Lining Application: Inspection requirements for pipeline coatings in accordance with the applicable pipeline coating system specification section.

G. Retain services of trained technician to test coating and lining system in shop and field in accordance with applicable pipeline coating system specification as selected. Provide certification letter that lining and coating meet specifications and include results of specified tests.

H. Onsite Observation of Pipe Manufacturer's Field Service Representative: The MPS shall make available an experienced staff member to be onsite when requested by CONTRACTOR and/or CONSTRUCTION MANAGER. MPS field services shall be in accordance with Section 01 43 33, Manufacturer's Field Services, and shall include a minimum of 5 person-days. MPS will be provided a minimum of 48-hour prior notification for field services. The staff member's duties shall include, but not be limited to the following:

1. Train CONTRACTOR's pipe installation crews as further specified in Section 01 43 33, Manufacturer's Field Services.
2. Inspect pipe upon delivery to site.
3. Observe pipe handling, moving, storage, and hoisting operations.
4. Report any concerns to the CONSTRUCTION MANAGER's onsite observer.
5. Answer questions and provide assistance to the CONSTRUCTION MANAGER or ENGINEER and the CONTRACTOR.
6. Inspection and certification of field mortar lining repair and dielectric coating repair of pipe, fittings, or specials when requested.
7. MPS's written Quality Assurance/Control (QA/QC) Plan.

I. QA/QC Plan Minimum Requirements:

1. The MPS's QA/QC program shall ensure the achievement of adequate quality throughout applicable areas of the Contract. The QA/QC Plan shall describe the program and include procedures, work instructions and records. In addition, the Plan shall describe methods relating to areas which require special testing and procedures as noted in the Specifications.
2. Identification and Control of Items and Materials: Procedures to ensure that items or materials that have been accepted at the manufacturing site are properly used and installed shall be described in the QA/QC Plan. The procedures shall provide for proper identification and storage, and prevent the use of incorrect or defective materials.
3. Inspection and Tests:
   a. The MPS shall have written procedures defining a program for control of inspections performed and these procedures shall be described in the QA/QC Plan.
   b. Perform and document inspections and tests by qualified individuals. At a minimum, "qualified" means having performed similar QA/QC functions on similar type projects. Maintain records of personnel experience, training and qualifications and make available for review by the CONSTRUCTION MANAGER upon request.

c. The MPS shall maintain adequate records of such inspections and tests. Submit inspection and test results.

d. Procedures shall include:

1) Specific instructions defining procedures for observing work in process and comparing this work with the Contract requirements (organized by specification section).

2) Specific instructions for noting deficiencies and steps to be taken to have the deficiency corrected, repaired, or replaced.

3) Specific instructions for recording observations and requirements for demonstrating through the reports that the Work observed was in compliance or a deficiency was noted and action to be taken.

4) Procedures to preclude the covering of deficient or rejected Work.

5) Procedures for halting or rejecting Work.

6) Procedures for resolution of differences between the QA/QC representative(s) and the production representative(s).

e. QA/QC Plan shall identify contractual hold/inspection points, as well as any MPS imposed hold/inspections points.

f. The QA/QC Plan shall include procedures to provide verification and control of testing provided by MPS including:

1) Verifying and noting on Daily Report required testing was performed and documenting results if available. (Include a sample of the MPS's Daily Report).

2) Provide location maps for tests performed or location of Work covered by the tests.

3) Maintaining copies of test results.

4) Submitting tests.

5) Ensuring CONSTRUCTION MANAGER receives independent copy of tests.

6) Ensuring testing lab(s) are functioning independently and in accordance with the Specifications.

7) Ensuring re-tests are properly taken and documented.

4. Control of Measuring and Test Equipment: Measuring and/or testing instruments shall be adequately maintained, calibrated and adjusted to maintain accuracy within prescribed limits. Perform calibration at specified periods against valid standards traceable to nationally recognized standards and documented.

5. Supplier Quality Assurance: The QA/QC Plan shall include procedures to ensure that procured products and services conform to the requirements of the Specifications. Apply requirements of these procedures, as appropriate, to lower-tier suppliers and/or Subcontractors.

6. Nonconformances and Corrective Action: The QA/QC Plan shall include procedures for handling of nonconformances. Nonconformances are defined as documentation, drawings, material, equipment or Work not conforming to the specified requirements or procedures. The procedure shall prevent the use of nonconformances by identification, documentation, evaluation, separation, disposition and corrective action to prevent recurrence. Promptly identify conditions having adverse effects on quality and report to the senior level management. Document and measure cause of conditions adverse to quality. Implement measures to prevent recurrence.
7. Special Processes and Personnel Qualifications:
   a. The QA/QC Plan shall include detailed procedures for the performance and control of special process (e.g. welding, soldering, heat treating, cleaning, plating, nondestructive examination, etc.).
   b. Personnel performing special process tasks shall have the experience, training and certifications commensurate with the scope, complexity, or nature of the activity.
8. Audits: The MPS's QA/QC program shall provide for documented audits to verify that QA/QC procedures are being fully implemented by the MPS as well as its subtiers. Make audit records available to the CONSTRUCTION MANAGER upon request.
9. Documented Control/Quality Records:
   a. The MPS shall establish methods for control of Contract Documents which describe how Drawings and Specifications are received and distributed to assure the correct issue of the document being used.
   b. The MPS shall maintain evidence of activities affecting quality, including operating logs, records of inspections and tests, audit reports, material analyses, personnel qualification and certification records, procedures, and document review records.
   c. Maintain quality records in a manner that provides for timely retrieval, and traceability. Protect quality records from deterioration, damage, and destruction.
   d. The MPS shall provide a list with specific records as specified in the Contract Documents for submittal at the completion of activities.
10. Acceptance of QA/QC Plan:
   a. ENGINEER's review and acceptance of the MPS's QA/QC Plan shall not relieve the MPS from any of its obligations for the performance of the Work. The MPS's QA/QC staffing is subject to the ENGINEER's review and continued acceptance. UTILITIES, at its sole option, without cause, may direct the MPS to remove and replace the QA/QC representative. Do not start Work covered by the QA/QC Plan until ENGINEER’s acceptance of MPS’s QA/QC plan has been obtained.

b. CONSTRUCTION MANAGER may perform independent quality assurance audits to verify that actions specified in MPS's QA/QC Plan have been implemented. No CONSTRUCTION MANAGER audit finding or report shall in any way relieve MPS from any requirements of this Contract.

1.07 DELIVERY, HANDLING, AND STORAGE

A. Pipe Marking:

1. Legibly mark installation sequence number on pipe, fittings, and specials in accordance with piping layout.
2. Mark special pipe sections and fittings at each end with notation “TOP FIELD CENTERLINE”.
3. Paint or mark the word “TOP” on outside top spigot of each special pipe or fitting.
4. Mark “TOP MATCH POINT” for compound bends per AWWA C208 so end rotations can be easily oriented in field.
5. Precisely paint 3/4-inch insertion band circumferentially around spigot end of each pipe to indicate location of maximum insertion into the bell.

B. Delivery:

1. Securely bulkhead or otherwise seal ends of pipe, specials, and fittings prior to loading at manufacturing site.
2. Pipe ends shall remain sealed until installation.
3. Unload pipe using equipment and methods as approved by MPS and in accordance with MPS pipe handling submittal.
4. Inspect each pipe and fitting for damage. Remove or smooth out any burrs, gouges, weld splatter or other small defects prior to laying the pipe.
5. Repair damage to pipe, fittings, or specials, including linings and coatings, found upon delivery to jobsite or remove from site and replace.

C. Storage:

1. Support pipe securely to prevent accidental rolling and to avoid contact with mud, water, or other deleterious materials. Support on sand or earth berms free of frozen material and rock exceeding 3 inches in diameter.
2. Carefully handle and protect pipe, fittings, and specials against damage to lining and coating/interior and exterior surfaces, impact shocks, and free fall. Pipe handling equipment shall be submitted and accepted by CONSTRUCTION MANAGER. Do not place pipe directly on rough ground but support at the 1/3 and 2/3 points along the length of the pipe section in a manner which will protect the pipe against injury whenever stored at the trench site or elsewhere.

3. Repair damage to pipe, fittings, or specials, including linings and coatings, found in stored pipe in accordance with manufacturer's instructions or remove from site and replace.
4. Gasket Storage: Store rubber gaskets in cool, well ventilated place, and do not expose to direct rays of sun. Do not allow contact with oils, fuels, petroleum, or solvents.
5. Pipe and Specials Protection: Protect with suitable bulkheads the openings of pipe and specials where the pipe and specials have been cement-mortar lined in the shop to maintain a moist atmosphere and to prevent unauthorized access by persons, animals, water or any undesirable substance. Maintain bulkheads, fix tears or replace bulkheads damaged. Introduce water into the pipe to keep the mortar moist where moisture has been lost due to damaged bulkheads.

1.08 SEQUENCING AND SCHEDULING

A. Notify CONSTRUCTION MANAGER in writing of the following pipe manufacturing events:

1. Pipe Manufacturing: Not less than 14 days prior to starting.
2. Not less than 5 days prior to start of each of the following:
   a. Welding of specials.
   b. Coating application.
   c. Lining application
   d. Shop hydrostatic testing.

PART 2 PRODUCTS

2.01 GENERAL

A. Manufacture of pipe and fabricated specials shall be under the direction and management of one steel pipe supplier only. This does not prevent a separate supplier from manufacturing specials or fittings; however, Work shall be directed by the MPS. The responsibility of the MPS shall include, at a minimum:

1. Ensure pipe, fittings, and specials are being manufactured in full accordance with the Drawings and Specifications.
2. Manage the design and fabrication of the pipe and specials.
3. Prepare and submit submittal information and shop drawings.
4. Make corrections that may be required to the submittal information and shop drawings.
5. Certify that the pipe and specials have been manufactured in accordance with the Specifications and Drawings.

B. Steel pipe, fittings, and specials shall be manufactured, tested, inspected, and marked to comply with AWWA C200, C208 and additional requirements of these Contract Documents. The pipe shall be of diameter and wall thickness as indicated.

C. In lieu of collar reinforcement, pipe, fittings, or specials with outlets may be fabricated in their entirety of steel plate having thickness equal to sum of pipe wall plus required reinforcement.

D. Unless shown otherwise, for pipes 24 inches in diameter and larger, the diameter shown shall be considered finished inside diameter after lining. For pipes less than 24 inches in diameter, the diameter shown shall be per ANSI B36.10M. According to this standard, pipe size shall be the nominal outside diameter for 14-inch diameter pipe and larger, and pipe size shall be the nominal inside diameter for 12-inch diameter pipe and smaller.

E. Materials furnished shall be NSF 61 approved for use with potable water.

2.02 PIPE BARREL

A. Steel: Provide steel coils for spiral welded steel pipe or steel plate for straight seam welded steel pipe per AWWA C200 and as follows:

1. Minimum Yield Strength: 42,000 psi.
2. Minimum Tensile Strength: 63,000 psi.
3. Maximum Measured Yield Strength: 85 percent of measured tensile strength.
4. Minimum Elongation in 2-inch Gauge Length: 21 percent.
5. Weld-Ability: Maximum carbon equivalent of 0.45, as measured using AWS D1.1, Annex XI , Guideline on Alternative Methods for Determining Preheat formula:
   CE=C+(Mn+Si)/6+(Cr+Mo+V)/5+(Ni+Cu)/15.
6. Pressure Vessel Quality as follows:
   a. Coils:
      1) Continuous cast process, fully-killed, fine grained practice conforming to physical, manufacturing and testing requirements of ASTM A1018/A1018M, Structural Steel (SS) Grade 36, Type 2 (modified).
      2) Steel Chemistry for SS Grade 36, Type 2 (modified):
         a) Manganese: 1.5 percent maximum.
         b) Aluminum: 0.020 percent minimum.
         c) Phosphorus: 0.025 percent maximum.
         d) Sulphur: 0.015 percent maximum.

b. Plate:
1) Fully-killed, conforming to ASTM A20, fine grained practice conforming to physical, manufacturing and testing requirements of ASTM A516/A516M, Grade 65.
2) Steel Chemistry: Conform to ASTM A516/A516M, Grade 65. Steel plates that are 3/4 inch thick or greater shall be normalized.

c. Toughness:
1) Charpy V-notch Acceptance Criteria (Steel Mill): Wall thickness equal to or greater than 0.4375 inches. Transverse specimen orientation, full size specimens, 25 foot-pounds energy at test temperature of 30 degrees F.

7. Wall Thickness:
a. Minimum wall thickness is shown on Drawings. No variation under specified minimum wall thickness allowed.
b. When not shown on Drawings, use standard weight in accordance with ANSI/ASME B36.10M.

2.03 FITTINGS AND SPECIALS

A. Fabrication:

1. Shop fabricate. No field fabrication will be allowed, unless approved by ENGINEER.
2. Fabricate from materials or straight pipe in full conformance with requirements of these Contract Documents and dimensions of AWWA C208, unless otherwise indicated.

B. Crotch Plate: Fabricate from fully killed, fine grain, pressure vessel steel conforming to ASTM A516/A516M, Grade 65, and as follows:

1. Plates thicker than 0.75 inches shall be normalized.
2. Sulfur content shall not exceed 0.005 percent. Carbon shall not exceed 0.20 percent. Manganese shall not exceed 1.20 percent.
3. Strength in the thru-thickness direction (Z direction) shall be the same as the X and Y directions.
4. Charpy V-notch tests in direction transverse to final rolling shall be performed per ASTM A370 on full size specimens of coupons taken from each plate. Acceptance shall be 25 foot-pounds at 30 degrees F.
5. Carbon equivalent shall not exceed 0.45 percent.

C. Wall Thickness:

1. General:
a. Refer to ANSI/ASME B36.10M for definitions of wall thickness for standard weight pipe and nominal pipe size (NPS).

b. Reinforce to withstand either internal pressures, both circumferential and longitudinal, or external loading conditions, whichever is greater.
c. Minimum Thickness: The greater of adjacent mainline pipe, the thickness shown on the Drawings, the thickness specified below for elbows, or as shown in Table 1.

Table 1		
Nominal Pipe Dia. (Inches)	**Pipe Manifolds Piping Above Ground Piping in Structures**	**Elbows Bends Reducers**
24 and Under	Standard Weight	Standard Weight

D. Elbows, Unless Otherwise Indicated:

1. Mainline Pipe: Radius shall not be less than 2.5 times pipe diameter unless specifically indicated on Drawings.
2. Radius Less than 2.5 Times Pipe Diameter:
   a. Only where indicated on Drawings.
   b. Minimum Radius: 1.0 times pipe diameter.
3. Minimum Wall Thickness: Greater of Table 1 above or, if radius is less than 2.5 times pipe diameter, as calculated using equation 9-1 or 9-3 in Chapter 9 of AWWA M11.
4. Maximum Miter Angle: 11-1/4 degrees on each section resulting in a maximum deflection angle of 22.5 degrees per miter weld as recommended in AWWA C208.
5. Bevels: Vary bevels on miters to provide a constant weld groove angle. For a 11-1/4 degree miter, (22.5 degrees miter weld) bevels must vary from 18.75 degrees on OD of bend to 41.25 degrees on ID of bend to provide a constant 60 degree groove angle for CJP welding.
6. Complete joint penetration (CJP) welds on miter welds.

E. Outlets and Nozzles:

1. 24 Inches and Smaller:
   a. Collar reinforcement: Steel material to be fabricated from standard weight steel pipe.
   b. Nozzle reinforcement: Steel material to be fabricated from ASTM A53/A53M, Type E or S, Grade B.
2. Larger than 24 Inches: Steel material shall conform to the requirements of Article 2.02
3. ASTM A139/A139M is not approved for use on this project.
4. Collar or wrapper reinforcement: Steel material to conform to the requirements of Article 2.02.

5. Tangential Nozzle for Blowoffs: Design in accordance with ASME Boiler and Pressure Vessel Code Section VIII, Division I, Rules for Construction of Pressure Vessels.

F. Steel Butt-Weld Fittings:

1. 24 Inches and Smaller: In accordance with ANSI/ASME B16.9 conforming to ASTM A234/A234M.
2. Standard weight.
3. Taper pipe wall at welds at 4:1 for connection to pipe of different wall thickness.
4. Coordinate difference in diameter convention between specials and AWWA C200/C208 pipe and fittings to provide complete piping system as shown.

2.04 WELDED JOINTS

A. Shop Welded:

1. Fabricate in accordance with AWWA C200 as modified herein.
2. Complete joint penetration (CJP) butt joints shall be used for longitudinal, girth, and spiral welds, unless otherwise indicated.
3. Lengths of pipe shall not be shop-joined using lap joints.

B. Preparation of Joints for Field Welding:

1. Butt Joints:
   a. Plain ends beveled as required by AWWA C200 and CONTRACTOR's field WPS.
      1) Tolerances on CJP butt joint beveled ends shall permit field assembly of pipe ends within workmanship assembly tolerances per AWS D1.1/D1.1M.
      2) Provide protection for factory beveled pipe ends so that ends are not damaged during transport.
   b. Taper pipe wall at welds at 4:1 for connection to pipe of different wall thickness.
2. Lap Joints:
   a. Double fillet lap joint.
   b. Double fillet lap joints in preparation for field welding shall be in accordance with the Drawings and AWWA C200.
   c. For pipe 30 inches in diameter and larger, precisely paint a circumferential 3/4-inch insertion band (leading edge of band indicating minimum insertion; trailing edge of band indicating maximum insertion; pulled joints to occur within band around entire circumference) around the outside of spigot end to indicate location at which spigot end has reached required penetration into bell.

d. Double welded lap joints and butt-strap joints shall be tapped and drilled for testing from the outside in accordance with AWWA C206 and the Standard Details.

C. Mitered-End Cuts:

1. As shown on Drawings.
2. Welded Lap Joints:
   a. Moderate deflections and long radius curves may be made using beveled ends with the maximum total allowable angle as indicated.
   b. Use only with lap welded joints, unless specifically approved in writing by ENGINEER.
   c. Maximum Total Allowable Angle: 3 degrees per pipe joint.
   d. Provide miter-cut that is cold expanded square with face of miter–cut on bell ends only.
   e. Mitering of spigot ends will not be permitted.

D. Temperature Control Lap Joint: Provide a special longer bell end (temperature control lap joint) at a maximum spacing of 300 feet to account for movement of the installed pipe due to temperature changes. The pipe manufacturer shall determine the length required for the longer bell.

2.05 STULLING (STRUTTING)

A. Materials:

1. Shop-Lined Pipe: Wood stulls and wedges.
2. Unlined Pipe: Steel or wood.

B. Install stulling in 30-inch and larger pipe, specials, and fittings in accordance with approved submittal and as soon as practical after pipe is fabricated or, for shop-lined pipe, after lining has been applied.

C. At a minimum, place one set of stulls 10 feet from each end of pipe section and at maximum interval of 15 feet.

D. Install stulling in a manner that will not harm lining.

2.06 COATINGS

A. General:

1. Notify CONSTRUCTION MANAGER at least 5 days prior to application of coating products.
2. Holdback of coating from field-welded joints shall be as shown in the Contract Drawings.

3. Furnish inspection devices that are calibrated and in good working condition for detection of holidays and measurement of coating film thickness and adhesion testing.
4. Coat buried pipe and fittings passing through structure walls to exposed piping as indicated.

B. Coating System: Provide one coating system from the following options:

1. Polyethylene tape coating in accordance with Section 09 81 00, Pipe Tape Coating.
2. Polyurethane Coating in accordance with Section 09 90 05, Polyurethane Coating.

C. Aboveground or Exposed Pipe Coating: In accordance with Section 09 90 04, Painting, System No. 5.

D. Field Coating of Joints: In accordance with Section 09 81 12, Pipe Joint Coating—Weld Before Backfill.

2.07 LININGS

A. General:

1. Notify CONSTRUCTION MANAGER at least 5 days prior to application of lining products.
2. Holdback of lining from field-welded joints shall be as shown in the Contract Drawings.

B. Shop-Applied Cement-Mortar Lining:

1. Applied centrifugally in conformance with AWWA C205. Thickness shall be in accordance with AWWA C205.
2. Lining machine type that has been used successfully for similar work and approved by ENGINEER.
3. Maintain pipe in round condition during lining operation and thereafter by suitable bracing or strutting.
4. Provide polyethylene or other suitable bulkhead on ends of pipe and on special openings to prevent drying out of lining. Bulkheads shall be substantial enough to remain intact during shipping and storage until pipe is installed.
5. Leave pipe bare where field joints occur.
6. Leave ends of lining square and uniform. Feathered or uneven edges will not be permitted.
7. Provide and install wire mesh reinforcement required in the lining of specials in accordance with AWWA C205

C. Field-Applied Cement-Mortar Lining at Joints: Materials for field placement of cement-mortar lining at joints shall be in accordance with AWWA C205.

2.08 FLANGED JOINTS AND BLIND FLANGES

A. Flange classification per criteria below.

B. Field coating for access manways, flanges, blind flanges, and couplings to be in accordance with Section 09 90 04, Painting, System No. 1; or wax tape in accordance with AWWA C217. Use manufacturer's filler to eliminate voids and provide smooth surface for tape.

C. For Pipe Sizes from 4-inch to 24-inch, inclusive, and Maximum Working Pressures Not Exceeding 275 psig:

1. Conform to ASME B16.5, Class 150, raised-face flanges, bolting materials, and flange gaskets.
2. Do not expose ASME B16.5 flanges to test pressures greater than 150 percent of rated capacity.

D. For Pipe Sizes from 26-inch to 60-inch, inclusive, and Maximum Working Pressures Not Exceeding 275 psig:

1. Conform to ASME B16.47, Class 150, Series A, raised-face flanges, bolting materials, and flange gaskets.
2. Do not expose ASME B16.47 flanges to test pressures greater than 150 percent of rated capacity.

E. For Pipe Sizes from 4-inch to 24-inch, inclusive, and Maximum Working Pressures Greater than 275 psig:

1. Conform to ASME B16.5, Class 300, raised-face flanges, bolting materials, and flange gaskets.
2. Do not expose ASME B16.5 flanges to test pressures greater than 150 percent of rated capacity.

F. For Pipe Sizes from 26-inch to 60-inch, inclusive, and Maximum Working Pressures Greater than 275 psig:

1. Conform to ASME B16.47, Class 300, Series A, raised-face flanges, bolting materials, and flange gaskets.
2. Do not expose ASME B16.47 flanges to test pressures greater than 150 percent of rated capacity.

G. Blind Flanges:

1. Blind flanges shall be in accordance with the appropriate standard determined by the maximum operating pressure as described above.
2. Blind flanges for pipe sizes 12 inches and greater shall be provided with lifting handle or lifting eyes welded to the flange, as shown on the Drawings.

2.09 COUPLINGS

A. General:

1. Couplings shall conform to AWWA C219.
2. Coupling linings for use in potable water systems shall be in conformance with NSF 61B.
3. Couplings shall be rated for appropriate operating pressure.

B. For Pipe with Flanged Ends (Dismantling Joints):

1. Self-contained, flanged, restrained joint fitting, including both flange components and sufficient harness bars to withstand the imposed thrust to which pipe, valve, or fitting the coupling is mated. Pressure rating equal to or greater than pipe, valve, or fitting to which the coupling is matted.
2. Flange Adapters and Spigot Pieces: Carbon steel, ASTM A283, Grade C. Bolt hole pattern to match connecting pipe and valves.
3. Provide bolts, nuts, and washers (when required) of suitable quality, workmanship, and yield strength to ensure compatibility with the coupling design and rated pressure. Materials shall minimize the possibility of galvanic corrosion.
4. Gaskets shall be elastomeric, conforming to ASTM D2000, suitable for pressure class and service.
5. Coating for flange adapter and spigot pieces: in accordance with Section 09 90 04, Painting.
6. Manufacturer: Viking Johnson; or approved equal.

2.10 WELD LEAD OUTLETS

A. Outlets for welding leads, if used, shall be as shown on the Drawings. The number and locations of these outlets shall be at the CONTRACTOR's option and shall be indicated on the Shop Drawings.

B. Plugs used for closing the weld lead outlets shall be suitable for the internal pressure and allow zero leakage. Weld plugs closed after completion of work.

2.11 SLAB, FLOOR, WALL, AND ROOF PENETRATIONS

A. Modular Mechanical Seal:

1. Type: Interconnected synthetic rubber links shaped and sized to continuously fill annular space between pipe and wall sleeve opening.
2. Assemble interconnected rubber links with Type 316 stainless steel bolts, nuts, and pressure plates.
3. Size modular mechanical seals according to manufacturer's instructions for the size of pipes shown to provide a watertight seal between pipe and wall sleeve opening.
4. Manufacturers and Products:
   a. Thunderline/LinkSeal, Div. Of PSI, Houston, TX; Link Seal.
   b. Calpico, Inc., South San Francisco, California; Sealing Linx.
   c. Advance Products and Systems, Lafayette, Louisiana; Innerlynx.

B. Wall Sleeves:

1. Determine appropriate diameter and length from information shown on Drawings. Coordinate with modular mechanical seal manufacturer to ensure sleeve size will provide a watertight seal. Submit dimensional data per Paragraph 1.05.B.
2. Shall include integral seep ring to minimize seepage between metal sleeve and concrete.
3. Coating and lining shall be in accordance with Section 09 90 04, Painting, System No. 1.

2.12 PIPE MARKING TAPE

A. As specified in Section 31 23 23.15, Trench Backfill.

2.13 PIPE BEDDING AND PIPE ZONE MATERIAL

A. As specified in Section 31 23 23.15, Trench Backfill.

2.14 TRENCH STABILIZATION MATERIAL

A. As specified in Section 31 23 23.15, Trench Backfill.

2.15 CATHODIC PROTECTION

A. Provide as shown and as specified in Section 26 42 02, Galvanic Anode Cathodic Protection System.

2.16 ELECTRICAL GROUNDING SYSTEM

A. Provide as shown in Section 26 42 00, Pipeline Grounding System.

2.17 TEMPERATURE MEASURING INSTRUMENTS

A. Provide industrial thermocouple thermometer gauges or digital, infrared thermometers, aka, “heat guns” for field measurement of pipe temperatures.

B. Minimum Thermocouple Thermometer Gauge Requirements:

1. Type K, wide probe, calibration in degrees F, maximum, minimum, hold, store and recall, clear.
2. Accuracy to plus or minus 2 degrees F.
3. Rugged and waterproof for field conditions.

C. Minimum Digital Infrared Thermometer Requirements:

1. Temperature Range: No less than -20 to 200 degrees F.
2. Accuracy to plus or minus 1 percent.
3. Distance to spot ratio of no less than 20:1.
4. Rugged and waterproof for field conditions.

2.18 SOURCE QUALITY CONTROL (PIPE MANUFACTURING)

A. Steel Toughness Testing for Thickness Equal to or Greater than 0.4375-Inch:

1. Include three impact specimens; conduct test in direction transverse to final direction of rolling.
2. Coils:
   a. Conduct Charpy Testing per ASTM A370 on the initial coil of each heat to establish uniformity of steel.
   b. Take test coupons from initial coil of each heat at locations of outer and inner wrap of coil.
   c. For each coil that fails to meet acceptance criteria, conduct Charpy Testing on the next two coils in that heat.
   d. Do not use coils that do not qualify in production of pipe.
3. Plate:
   a. Conduct Charpy Tests on each plate in accordance with ASTM A20.
   b. Conduct on full-size (10 mm by 10 mm) specimens from each plate in accordance with ASTM A20.
   c. Do not use plates that do not qualify in production of pipe.

B. Crotch Plate:

1. Perform through-thickness tension testing with acceptance criteria per Article 5 of ASTM A770/A770M on each plate.
2. Conduct Straight-Beam Ultrasonic Examination with acceptance criteria per Article 6 of ASTM A435/A435M on each plate.
3. Do not use plates that do not qualify.

C. Shop Hydrostatic Pressure Test: In accordance with AWWA C200 Section 5.2, except as follows:

1. General: Unless specified otherwise, perform testing of pipe, fittings, and specials before lining and coating is applied.
2. Pipe: Maintain test pressure for minimum of 5 minutes.
3. Fittings and Specials:
   a. If fabricated from untested straight pipe, test to minimum pressure equal to field test pressure.
   b. Except as otherwise specified herein, no additional shop hydrostatic test will be required on fittings and specials fabricated from successfully tested straight pipe and where new welds are tested as specified.
   c. Hydrostatically test fittings and specials with crotch plates, regardless of whether or not straight pipe sections used were previously tested.

D. Joints, Lap-Welded:

1. Fit test minimum of five joints during initial pipe fabrication, selected by ENGINEER, of each pipe size used:
   a. Join pipe ends with proposed adjacent pipe end.
   b. Match-mark pipe ends.
   c. Record Actual Annular Space:
      1) Maximum space at any point.
      2) Minimum space at any point.
      3) Space at 90-degree intervals; top, bottom, and spring line on both sides.

E. Shop Nondestructive Testing:

1. Welds: 100 percent visually examined by CWI to criteria in ASME BPVC SEC VIII, Division 1.
2. Butt-Joint Groove Welds: Spot radiographically examine pipe in accordance with ASME BPVC SEC VIII, Div. 1, Par. UW-52. 100 percent ultrasonically examine welds that, in opinion of CONSTRUCTION MANAGER, cannot readily be radiographically examined; acceptance criteria in accordance with ASME BPVC SEC VIII, Division 1, UW-53.
3. Fillet Welds: 100 percent examine using magnetic particle inspection method in accordance with ASME BPVC SEC VIII, Division 1.
4. Air test collars and wrappers in accordance with AWWA C206.

PART 3 EXECUTION

3.01 GENERAL

A. Install piping complete with jointing materials and accessories, anchors, and other appurtenances.

B. Prepare trench as specified in Section 31 23 16.13, Excavation. Keep trench dry until pipe laying and joining is completed.

C. For field welded joints, pipe 30 Inches in Diameter and Larger:

1. Ensure that acceptable penetration of spigot end into bell end is achieved through use of painted circumferential marking on outside of spigot end or through use of shop-welded tabs on inside circumference of bell end.
2. Remove welded tabs prior to welding inside of joint.

D. Stulling:

1. Maintain stulling in place until pipe is completely backfilled and compacted.
2.
3. Re-install stulls that were temporarily removed to facilitate interior welding prior to backfilling.

E. Perform electrical coating inspection of each pipe segment and fabricated special prior to placing pipe in trench.

3.02 LAYING PIPE

A. Trenching, embedment, and backfilling of buried piping shall conform to Section 31 23 16.13, Excavation, and Section 31 23 23.15, Trench Backfill, and to the details indicated on the Drawings. Do not install pipe when water is in the trench.

B. Before placement of pipe in the trench, ensure each pipe or fitting is clean of any foreign substance, keep clean thereafter. For this purpose, cover the openings of pipes and fittings in the trench during non-working hours.

C. Handle pipe with proper equipment in a manner to prevent distortion or damage. Use of hooks, chains, wire ropes, or clamps that could damage pipe, damage coating or lining, or kink and bend pipe ends are not permitted. Use heavy canvas, or nylon slings of suitable strength for lifting and supporting materials.

D. Lift pipe during unloading or lifting into trench using one or more slings as required to prevent uncontrolled swinging, damage to pipe, or harm to workers. Slings shall bear uniformly against pipe.

E. If pipe zone material is CLSM, lay pipe directly on moist sand bag supports in preparation for CLSM. Place sand bag supports to provide at least 6 inches of CLSM below bottom of pipe. Space supports at a maximum interval of 8 feet and one set within 3 feet on both sides of each joint. Provide additional sand bags as needed to support pipe on line and grade.

F. Form bell holes at the ends of pipe to prevent point loading at the bells or couplings. Make excavation outside normal trench section at field joints for field connections and application of coatings.

G. Lay each section of pipe in the order and position shown on the shop drawings and pipe layout. Lay to the set line and grade. Installation tolerances shall be as hereinafter specified.

H. Out-of-Round Pipe: Straight pipe that deviates from a true circle by more than 1 percent shall be laid with its larger diameter vertical, or by using struts on continuous head and sill timbers to correct the vertical diameter where acceptable to the CONSTRUCTION MANAGER. Perform final inspection, repair, and checking of interior lining after the struts have been removed.

I. Horizontal and vertical deflections and fabricated angles shall fall on alignment, as shown except as may be required for beveling a single end either side of a deflection.

J. Where necessary to raise or lower the pipe due to unforeseen obstructions or other causes, the ENGINEER may change the alignment and/or the grades. Make changes by the deflection of joints, by the use of beveled joints, or by the use of fittings. No joint shall be misfit any amount that will be detrimental to the strength and water tightness of the finished joint, including the strength and water tightness of the protective lining at the finished joint.

K. Make minor field adjustments by pulling standard joints. The allowable deflection of field joints is as follows:

1. Maximum Allowable Angle: 75 percent of manufacturer's recommended, or angle that results from 3/4-inch pull out from normal joint closure, whichever is less.
2. Maximum Allowable Gap: 1/8 inch between bell and spigot at weld location.
3. No minor deflections (pulls) shall be allowed at beveled ends.

L. For grades exceeding 10 percent lay pipe in an uphill direction except for short runs that may be permitted by the CONSTRUCTION MANAGER. Block pipe which is laid on a downhill grade and hold in place until sufficient support is furnished by the following pipe to prevent movement.

M. Whenever pipe laying is stopped at the end of the day, seal the open end of the line and close access manholes to prevent entry by unauthorized personnel, animals, dirt, and debris. Maintain continuous dewatering when necessary to prevent groundwater or surface water from entering the pipeline. Remove water from the trench to the level indicated in Section 31 23 16.13, Excavation prior to resuming pipe laying operations.

N. Alignment and Grade:

1. Lay pipe to the lines and grades indicated on the Drawings. Pipelines or runs intended to be straight shall be laid straight. Curves in push-on joint pipe may be formed by opening the joint. Maximum joint openings and deflections shall be 75 percent of that recommended by the pipe manufacturer. In welded pipe, deflections up to 3.0 degrees at a single joint may be made by factory-mitering the bell end of one pipe.
2. Use survey equipment to indicate alignment and grade. Take at least one elevation reading on each length of pipe. Make periodic elevation measurements with surveying instruments to verify accuracy of grades.
3. Verify survey set up at least daily using an independent benchmark or temporary benchmark.

O. Tolerances:

1. Alignment and Grade Tolerances:
   a. Plus or minus 0.20 foot in grade. High and low points will not be acceptable, except where indicated on the Drawings.
   b. Plus or minus 0.33 foot in alignment, except where indicated differently on the Drawings.
2. Observe stricter tolerances than specified above as necessary to maintain minimum cover, to maintain required clearances, to place carrier pipe inside the casing pipe, to make pipe connections to existing piping, to maintain the correct slope in the run to prevent high or low points along the pipeline other than those locations indicated on the Drawings.

P. Protection of Pipe: Take precautions to protect the pipe from damages at locations where the CONTRACTOR proposes to cross the installed pipeline with heavy equipment. Acceptable precautions include: backfilling the pipe trench as necessary to protect the pipe, concrete encasing the pipe, and placing steel plating over the pipe. Repair damage to the pipe.

Q. Pipe Deflection: After completion of backfilling and before acceptance of the Work, test for excessive deflection on pipes larger than 30 inches in diameter by measuring the actual inside vertical diameter. Deflection measurements will be made by the CONSTRUCTION MANAGER. Pipe diametral deflection shall not exceed 2.0 percent of the nominal inside diameter measured in the vertical orientation and at any point in the pipe. Correct diametral deflection percent to less than 2.0 percent.

Diametral Deflection = 100 x [(Nominal ID –Measured Vertical)/Nominal ID]

R. Cleaning: Remove stulling, soil, loose mortar, and any other debris from inside the pipeline. Thoroughly sweep out and clean pipeline interior.

3.03 JOINTING

A. General:

1. Welded Joints: Perform interior and exterior joint welding prior to backfilling.
2. Final Lining Application at Joints:
   a. Shop-Applied Cement Mortar Lining: After the backfill has been completed to final grade and a successful joint test and NDT has been performed, fill interior joint recess or LHA of cement-mortar-lined pipe with grout, tightly packed into the joint recess and troweled flush with the interior surface in accordance with AWWA C205. Remove excess grout. At no point shall there be an indentation or projection of the grout exceeding 1/16 inch.

B. Flanged Joints: Before the joint is assembled, thoroughly clean the flange faces of foreign material. Center the gasket in the connecting flanges and draw up watertight without unnecessarily stressing the flanges. Tighten bolts in a progressive diametrically opposite sequence and torqued with a suitable, approved and calibrated torque wrench. Torque values shall be as recommended by the pipe manufacturer. Apply clamping torque to the nuts only.

C. Mechanical Couplings: When installing couplings, take care that the connecting pipe ends, couplings and gaskets are clean and free of dirt and foreign matter. Install in conformity with the recommendation and instruction of the coupling manufacturer and as specified for flanges.

D. Use wrenches in bolting couplings of a type and size recommended by the coupling manufacturer. Tighten coupling bolts so as to secure a uniform annular space between the follower rings and the body of the pipe with bolts tightened approximately the same amount. Tighten diametrically opposite bolts progressively and evenly. For final tightening, use a suitable, approved

and calibrated torque wrench set for the torque recommended by the coupling manufacturer. Apply clamping torque to the nut only.

E. Welded Joints:

1. Perform welding under the supervision of CONTRACTOR's welding inspector and in coordination with UTILITIES' CWI.
2. Use butt welds for welded joints in pipe assemblies and in the fabrication of bends other specials and as indicated.
3. Field-welded joints shall be either welded butt strap joints, welded butt joints, or welded lap joints as indicated on the Drawings, and shall conform to AWS D1.1, AWWA C206, approved welding procedures, and referenced welding codes. In case of conflict, AWS D1.1 shall govern.
4. Determine preheat and interpass temperature requirements for unlisted base metals according to AWS D1.1, *Annex I Guideline on Alternative Methods for Determining Preheat*.
5. Repair and retest rejectable welds until sound weld metal has been deposited in accordance with appropriate welding codes.
6. Where exterior welds are performed, provide adequate space for welding and inspection of the joints.
7. When fitting up the ends of pipe to be welded or fitting butt-strap pieces, minor jacking or clamping will be allowed. Cold working the metal with sledges or localized application of heat will not be allowed. If field displacement of joints, where butt strap joints are indicated, does not allow proper fit up with the tolerances indicated, special closure butt straps or mitered pieces shall be shop fabricated and installed.
8. Welded Lap Joints: During installation of welded steel pipe in either straight alignment or on curves, lay the pipe so that at any point around the circumference of the joint there is a minimum lap as shown on the Drawings. Hold back the toe of the weld from the nearest point of tangency of the bell radius as shown on the Drawings.
9. Prior to beginning the welding procedure, equally distribute annular space between the faying surfaces of the bell and spigot around the circumference of the joint by shimming, jacking, or other suitable means. Perform welding in a manner that will maintain the equalized fitup.
10. Welded Butt Joints: Where used or required, shall be CJP and as indicated.
11. After the pipe and pipe joint are properly positioned in the trench, weld and provide external joint protection for joints except the special temperature control lap joint hereinafter specified. Backfill to at least 1 foot above the top of pipe the lengths of pipe between special temperature control joints. Weld the special temperature control joints after the pipe is backfilled to at least 1 foot above the top of the pipe for the full distance to the temperature control joints upstream and

downstream. Provide joint protection for special temperature control joints after completion of the joint welds and tests as specified. Exercise care during the initial backfilling to prevent movement of the pipe and to prevent any backfill material from being deposited on the special temperature control joint.

12. Control of Temperature Stresses:
    a. Control temperature stresses in accordance with AWWA C206, the submitted and accepted temperature stress control submittal, and these Specifications.
    b. Supply a special temperature control lap joint at intervals not exceeding 300 feet along welded reaches of the pipeline, at the first regular lap-welded field joints outside concrete encasements and structures, and where shown, unless otherwise approved by the ENGINEER. Lay joint with an initial lap of not less than 3 inches greater than the typical lap joint. Where temperature control lap joints occur in a traveled roadway or other inconvenient location, the location of the joint may be adjusted, as acceptable to the ENGINEER.
    c. Provide and install thermocouple temperature gauges on the inside top of the pipe or use infrared thermometers to monitor the temperature of the steel pipe wall as it lays in the trench.
    d. Measure the pipe temperature at the top of the steel cylinder. Meet specific temperature requirements for the pipeline steel cylinder prior to installation of the pipe zone material, during and after placement of pipe zone material, and during welding of the special temperature control joints. If atmospheric conditions do not allow the conditions to be met, supplemental cooling is required. The following outlines the specific temperature control requirements:
        1) Prior to and during placement of the pipe zone and trench zone material, the pipeline steel temperature shall be at or below 85 degrees F and shall be at or above 30 degrees F if pipe zone material is CLSM. If pipe zone material is CLSM, the specified temperature shall be maintained for at least 3 hours after the placement of pipe zone and trench zone material. If granular material is used in the pipe zone, specified temperature must be maintained until the temperature control joint on both sides of the backfilled section are welded and backfilled. Provide supplemental shading or cooling as required.
        2) Proceed with placement of pipe zone and trench zone material in the direction of pipe laying from one special temperature control joint to the next. During placement of pipe zone and trench zone material, leave the lead end of the pipe section (toward the next special temperature control joint) unbackfilled or otherwise unrestrained such that the

end of the pipe is free to move in response to expansion or contraction due to temperature changes.

3) During period between pipe zone and trench zone material placement operations, shade the sections of pipeline that are partially backfilled with pipe zone and trench zone material (less than 1 foot over the top of pipe) as specified above. Shading of the partially backfilled pipe need not be performed when the CONTRACTOR can demonstrate to the satisfaction of the CONSTRUCTION MANAGER, using thermocouple temperature gauges or infrared thermometer data, that shading is not necessary to meet the specified temperature requirements. Do not allow the temperature of the partially backfilled pipe to exceed 90 degrees F at any time. Provide supplemental shading or cooling as required.

4) Prior to welding the special temperature control joints, maintain the pipeline extending 300 feet each direction from the joint at or below 85 degrees F and at or above 30 degrees F. Additionally, backfill the pipeline extending 300 feet each direction from the joint to at least 1 foot over the top of the pipe. If granular material is used in the pipe zone instead of CLSM, then completely backfill the pipeline extending 300 feet each direction from the joint. Maintain pipe temperature within in the specified range while welding the special temperature control joint. Use thermocouple or infrared thermometer data to demonstrate to the CONSTRUCTION MANAGER the pipe temperature is within specified limits.

13. Field-welded lap joints shall have fillet welds both inside and outside.

14. Welding Procedures:

a. Upon completion of each field-welded joint, the welding inspector shall record the welder's name, location on the weld, and results of VT. The welding inspector shall maintain these records and provide them to the UTILITIES'' CWI each week.

b. Allow UTILITIES' CWI and CONSTRUCTION MANAGER access to field welded joints to perform Special Inspection NDT.

c. Following successful tests of the joint, coat the exterior joint spaces as indicated. Holiday test tape wrapped pipe, including heat shrink sleeves, as approved by the CONSTRUCTION MANAGER. After a successful Holiday test, backfilling may be completed.

3.04 REPAIR OF SHOP-APPLIED COATINGS

A. Coatings: In accordance with coating system provided.

1. Section 09 81 00, Pipe Tape Coating.
2. Section 09 90 05, Polyurethane Coating.
3. Section 09 81 12, Pipe Joint Coating—Weld Before Backfill.

B. Other Coatings: In accordance with Section 09 90 04, Painting.

C. Perform electrical coating inspection after coating repair.

3.05 COATING OF FIELD-WELDED JOINTS

A. Apply heat-shrinkable coating application as specified in Section 09 81 12, Pipe Joint Coating—Weld Before Backfill.

3.06 CATHODIC PROTECTION

A. Apply to pipe as shown and as specified in Section 26 42 02, Galvanic Anode Cathodic Protection System.

3.07 FIELD QUALITY CONTROL

A. Electrical Coating Inspection: Perform in accordance with Section 09 90 05, Polyurethane Coating.

B. Field Welding:

1. In the presence of UTILITIES' CWI and CONSTRUCTION MANAGER, test double welded butt-strap joints or double-welded lap joint welds by pressurizing to 40 psi in the area between the two fillet welds in accordance with AWWA C206.
   a. Apply air or other ENGINEER-approved gas into connection between the two fillet welds.
   b. Paint welds with soap solution.
   c. Mark leaks indicated by escaping gas bubbles.
   d. Close threaded openings with flush pipe plugs or by welding them.
2. Coordinate the Work to allow UTILITIES' CWI and CONSTRUCTION MANAGER to inspect 100 percent of butt joint groove welds with full circumference RT.
3. Coordinate the Work to allow UTILITIES' CWI and CONSTRUCTION MANAGER to inspect exterior and interior welds that may include 100 percent of double welded lap joint and double welded butt-strap joint welds with full circumference VT, and PT or MT.

4. Weld Acceptance:
   a. VT: AWS D1.1 Paragraph 6.9 Visual Inspection, Statically Loaded Nontubular Connections.
   b. UT: Perform UT of CJP groove welds in accordance with AWS D1.1, paragraph 6.13.1
   c. RT: Perform RT of CJP butt joint groove welds in accordance with AWS D1.1, paragraph 6.12.1.
   d. PT or MT:
      1) Perform on fillet and PJP groove welds in accordance with AWS D1.1, paragraph 6.10.
      2) Acceptance shall be in accordance with VT standards specified above.
5. Remove defective welds in manner that permits proper and complete repair by welding.
6. Caulking or peening of welds is not permitted.
7. Retest unsatisfactory welds.
8. UTILITIES' CWI will perform Special Inspection and NDT, after Contractor's Welding Inspector has provided 100 percent VT of all welds.

C. Hydrostatic Testing:

1. General:
   a. Notify CONSTRUCTION MANAGER in writing a minimum 5 days prior to testing. Perform testing in presence of CONSTRUCTION MANAGER.
   b. Test newly installed pressure pipelines. Use water as test medium. Pipeline shall successfully pass a leakage test prior to acceptance.
   c. Provide pumps, piping, equipment, and connection for filling pipeline with water for hydrostatic testing.
   d. Furnish water for testing.
   e. Furnish testing equipment, except test pressure gauge, and perform tests in manner satisfactory to CONSTRUCTION MANAGER. CONSTRUCTION MANAGER will furnish pressure gauge for test. Testing equipment shall provide observable and accurate measurements of make-up water under specified conditions.
   f. Provide sufficient temporary air trappings in the pipelines as needed to allow for evacuation of entrapped air in each pipe segment to be tested. After completion of the test, permanently plug such taps.
   g. Isolate new pipelines that are connected to existing pipelines. The test shall be made by closing valves when available or by placing suitably restrained temporary bulkheads in the pipe capable of resisting the thrust of the test pressure without damage to, or movement of, the adjacent pipe.

h. Conduct field hydrostatic test on buried piping after trench has been completely backfilled and field-placed concrete or mortar has attained a strength of 3,000 psi.
i. Drain pipeline in accordance with Section 01 77 00, Closeout Procedures.

2. Procedure:
   a. Fill the pipeline with test water at a rate that will not cause any surges or exceed the rate at which the air can be released through air valves and temporary trappings at a reasonable velocity. Allow air to be purged. Maximum filling velocity shall not exceed 0.50 feet per second, calculated based on the full area of pipe.
   b. After the pipeline or test section has been filled, allow it to stand under a slight pressure for at least 24 hours to allow the concrete or mortar lining to absorb what water it will and to allow the escape of air from any air pockets.
   c. Examine exposed bulkheads, valves, and connections for leakage during this pre-test period.
   d. Test HGL: As shown in the Drawings on the Hydraulic Profile.
   e. Maximum length of pipeline to be tested in a single hydrotest is the complete pipeline length. Shorter lengths can be tested separately.
   f. Apply and maintain specified test pressure with hydraulic force pump. Valve off pump piping system when test pressure is reached.
   g. Maintain hydrostatic test pressure continuously for 2 hours minimum, adding additional make-up water only as necessary to restore test pressure.
   h. Determine actual make-up water by measuring quantity of water necessary to maintain specified test pressure for duration of test.
3. Allowable Leakage:
   a. Pipe with welded joints shall have zero allowable leakage.
   b. Flange Connections:
      1) Allow CONSTRUCTION MANAGER to inspect flange connections.
      2) Fix connections experiencing leakage.
   c. In the case of pipelines or pipeline sections that fail to pass the prescribed leakage test:
      1) Determine the cause of the leakage and take corrective measures necessary to repair the leaks.
      2) Retest the repaired section using the prescribed procedure.
      3) Continue repair and retest procedures until the tested section passes the test.

END OF SECTION

SECTION 33 05 13
MANHOLES AND PRECAST VAULTS

PART 1 GENERAL

1.01 REFERENCES

A. The following is a list of standards that may be referenced in this section:

1. ASTM International (ASTM):
   a. A36, Standard Specification for Carbon Structural Steel.
   b. A48, Standard Specification for Gray Iron Castings.
   c. A123, Standard Specification for Zinc (Hot-Dip Galvanized) Coatings on Iron and Steel Products.
   d. A167, Standard Specification for Stainless and Heat-Resisting Chromium-Nickel Steel Plate, Sheet, and Strip.
   e. A240, Standard Specification for Heat-Resisting Chromium and Chromium-Nickel Stainless Steel Plate, Sheet, and Strip for Pressure Vessels.
   f. A536, Standard Specification for Ductile Iron Castings.
   g. A615/A615M, Standard Specification for Rail-Steel Deformed and Plain Bars for Concrete Reinforcement.
   h. B139, Standard Specification for Phosphor Bronze Rod, Bar, and Shapes.
   i. C14, Standard Specification for Concrete Sewer, Storm Drain, and Culvert Pipe.
   j. C387, Standard Specification for Packaged, Dry, Combined Materials for Mortar and Concrete.
   k. C443, Standard Specification for Joints for Circular Concrete Sewer and Culvert Pipe, Using Rubber Gaskets.
   l. C478, Standard Specification for Precast Reinforced Concrete Manhole Sections.
   m. C923, Standard Specification for Resilient Connectors Between Reinforced Concrete Manhole Structures, Pipes, and Laterals.
   n. D4101, Standard Specification for Propylene Plastic Injection and Extrusion Materials.
   o. F593, Standard Specification for Stainless Steel Bolts, Hex Cap Screws, and Studs.
   p. F594, Standard Specification for Stainless Steel Nuts.

1.02 SUBMITTALS

A. Action Submittals:

1. Shop Drawings:
   a. Precast Manholes: Details of construction.
   b. Precast Base, Cones, and Top Slab Sections: Details of construction.
   c. Manholes Over Existing Piping: Plans and schedule for diverting flow.
   d. Precast Utility Vaults:
      1) Shop Drawings indicating member size, reinforcing, location of embeds and blockouts.
      2) Design calculations.

B. Informational Submittals:

1. Precast Manhole Sections: Manufacturer's results of tests performed on representative sections to be furnished.

1.03 QUALITY ASSURANCE

A. Qualifications of Precasting Manufacturers:

1. Precast Concrete: Product of manufacturer with 3 years' experience producing precast concrete product of quality specified.
2. Precast Plant: PCI certified plan with current certification.
3. Calculations stamped by an engineer registered in the same state as the Project.

1.04 DESIGN REQUIREMENTS FOR PRECAST UTILITY VAULTS AND MANHOLES

A. Design requirements to be in compliance with the design criteria shown on the General Structural Notes Drawing.

B. Loads: Dead, live, and soil loads as shown on the Drawings. Roof live loading per AASHTO HS20-44 rear axle load. Lateral earth pressures to correspond to the at-rest equivalent fluid pressure shown on the General Structural Notes Drawing.

C. Design Standards: ACI 318-08.

PART 2 PRODUCTS

2.01 PRECAST MANHOLES

A. Riser Sections:

1. Minimum 48 inches in diameter.
2. Fabricate in accordance with ASTM C478.
3. Minimum Wall Thickness: 4 inches or 1/12 times inside diameter, whichever is greater.
4. Top and bottom parallel.
5. Joints: Tongue-and-groove or confined groove with mortar.

B. Base Sections and Base Slab:

1. Base Sections: Base slab integral with sidewalls.
2. Fabricate in accordance with ASTM C478.

C. Manhole Extensions:

1. Concrete grade rings; maximum 6 inches high.
2. Fabricate in accordance with ASTM C478.

D. Preformed Plastic Gaskets:

1. Hamilton Kent of Nevada, Sparks, NV; Kent-Seal No. 2.
2. Henry Company, Houston, TX; Ram-Nek.

E. Source Quality Control:

1. Test specimens to be mat tested and meet permeability test requirements of ASTM C14.
2. Conduct tests at point of manufacture prior to delivery of any section.
3. Sections to be tested will be selected at random from stockpiled material to be supplied for the Project.

2.02 PRECAST UTILITY VAULTS

A. Materials:

1. Formwork:
   a. One-piece, full-length, and without seams.
   b. As specified in Section 03 30 10, Structural Reinforced Concrete.
2. Reinforcing Steel: As specified in Section 03 30 10, Structural Reinforced Concrete.
3. Cement: As specified in Section 03 30 10, Structural Reinforced Concrete.
4. Aggregates: As specified in Section 03 30 10, Structural Reinforced Concrete, for 3/4-inch maximum size.

5. Admixtures: As specified in Section 03 30 10, Structural Reinforced Concrete.
6. Embedded Items: ASTM A36 steel.
7. Grout: Nonshrink, nonmetallic grout as specified in Section 03 30 10, Structural Reinforced Concrete.

B. Concrete Mix:

1. As specified in Section 03 30 10, Structural Reinforced Concrete.
2. Design Strength: 5,000 psi at 28 days.
3. Water/Cement Ratio: 0.38 maximum.

C. Riser Sections:

1. Minimum Wall Thickness: 6 inches.
2. Top and bottom parallel.
3. Joints: Tongue-and-groove or confined groove with mortar.

D. Top Sections and Roof Slab:

1. Minimum Wall and Slab Thickness: 6 inches.
2. Top Sections: Roof slab integral with sidewalls.

E. Base Sections:

1. Slab integral with side wall.
2. Coordinate size and type of penetrations as shown on Drawings.

F. Sizes shown on Drawings are minimum acceptable size. Supplier may provide larger vaults to meet manufacturer's standard unit size.

2.03 MANHOLE FRAMES AND COVER

A. Castings:

1. Tough, close-grained gray iron, sound, smooth, clean, free from blisters, blowholes, shrinkage, cold shuts, and defects.
2. Cast Iron: ASTM A48 Class 30B.
3. Ductile Iron: ASTM A536, Grade 60-40-12.
4. Plane or grind bearing surfaces to ensure flat, true surfaces.
5. Cover Label: WATER.

2.04 MORTAR

A. Standard premixed in accordance with ASTM C387, or proportion one part portland cement to two parts clean, well-graded sand that will pass a 1/8-inch screen.

B. Admixtures: May be included but do not exceed the following percentages of weight of cement:

1. Hydrated Lime: 10 percent.
2. Diatomaceous Earth or Other Inert Material: 5 percent.

C. Mix Consistency:

1. Tongue-and-Groove Type Joint: Such that mortar will readily adhere to pipe.
2. Confined Groove (Keylock) Joint: Such that excess mortar will be forced out of groove and support is not provided for section being placed.

2.05 IMPORTED PIPE BASE

A. Furnish as specified in Section 31 23 23.15, Trench Backfill.

PART 3 EXECUTION

3.01 GENERAL

A. Remove and keep water clear from the excavation during construction and testing operations.

B. Place imported pipe base material on undisturbed earth; thoroughly compact with a mechanical vibrating or power tamper.

3.02 EXCAVATION AND BACKFILL

A. Excavation: As specified in Section 31 23 16.13, Excavation.

B. Backfill: As specified in Section 31 23 23.15, Trench Backfill.

3.03 INSTALLATION OF PRECAST MANHOLES AND UTILITY VAULTS

A. Concrete Base:

1. Cast-in-Place:
   a. Vibrate to densify concrete and screed so first precast manhole section to be placed has a level, uniform bearing for full circumference.
   b. Deposit sufficient mortar on base to assure watertight seal between base and manhole wall, or place first precast section of manhole in concrete base before concrete has set. Properly locate and plumb first section.

2. Precast:
    a. Place on compacted imported base material.
    b. Properly locate, ensure firm bearing throughout, and plumb first section.

B. Sections:

1. Carefully inspect precast manhole sections to be joined.
2. Thoroughly clean ends of sections to be joined.
3. Do not use sections with chips or cracks in the tongue.

C. Mortar Joints:

1. Thoroughly wet joint with water prior to placing mortar.
2. Place mortar on groove of lower section prior to section installation.
3. Fill joint completely with mortar of proper consistency.
4. Trowel interior and exterior surfaces smooth on standard tongue-and-groove joints.
5. Prevent mortar from drying out and cure by applying an approved curing compound or comparable approved method.
6. Do not use mortar mixed for longer than 30 minutes.
7. Chip out and replace cracked or defective mortar.
8. Completed Manholes: Rigid and watertight.

D. Preformed Plastic Gaskets (In lieu of mortar joints):

1. Use only pipe primer furnished by gasket manufacturer.
2. Install gasket material in accordance with manufacturer's instructions.
3. Completed Manholes to be rigid and watertight.

E. Rubber Gasketed Joints: Install in accordance with manufacturer's instructions.

F. Extensions:

1. Provide on manholes in streets or other locations where a subsequent change in existing grade may be likely.
2. Install to height not exceeding 12 inches.
3. Lay grade rings in mortar with sides plumb and tops level.
4. Seal joints with mortar as specified for sections, and make watertight.

3.04 MANHOLE FRAMES AND COVERS

A. Set frames in bed of mortar with mortar carried over flange as shown.

B. Set tops of covers flush with surface of adjoining pavement or ground surface, unless otherwise shown or directed.

C. At locations shown, install interior manhole frame to structure seals in accordance with manufacturer's instructions.

END OF SECTION

SECTION 40 27 00
PROCESS PIPING—GENERAL

PART 1 GENERAL

1.01 REQUIREMENTS

A. With respect to the Raw Water Pipeline, the provisions of this section are superseded by those in Section 33 05 01.01, Welded Steel Pipe and Fittings—Weld After Backfill, and Section 33 05 01.02, Welded Steel Pipe and Fittings—Weld Before Backfill, when they are in conflict with this section.

B. This section describes the general requirements for other project piping including piping, flanges, bolts, nuts, gaskets, and miscellaneous piping items and is only applicable to the piping schedule listed herein.

1.02 REFERENCES

A. The following is a list of standards which may be referenced in this section and any supplemental Data Sheets:

1. American Association of State Highway and Transportation Officials (AASHTO): HB-17, Standard Specifications for Highway Bridges.
2. American Concrete Institute (ACI): 301, Standard Specification for Structural Concrete.
3. American National Standards Institute (ANSI):
   a. B1.20.1, Pipe Threads General Purpose.
   b. B16.1, Cast Iron Pipe Flanges and Flanged Fittings Classes 25, 125, and 250.
   c. B16.21, Nonmetallic Flat Gaskets for Pipe Flanges.
   d. B16.25, Butt Welding Ends.
   e. B36.10M, Welded and Seamless Wrought Steel Pipe.
4. American Society for Nondestructive Testing (ASNT): SNT-TC-1A, Personnel Qualification and Certification in Nondestructive Testing.
5. American Society of Mechanical Engineers (ASME):
   a. Boiler and Pressure Vessel Code, Section V, Nondestructive Examination.
   b. Boiler and Pressure Vessel Code, Section VIII, Rules for Construction of Pressure Vessels.
   c. Boiler and Pressure Vessel Code, Section IX, Qualification Standard for Welding and Brazing Procedures, Welders, Brazers, and Welding and Brazing Operators.
   d. B16.1, Standards for Pipes and Fittings.
   e. B16.21, Nonmetallic Flat Gaskets for Pipe Flanges.
   f. B16.25, Butt Welding Ends.
   g. B16.3, Malleable Iron Threaded Fittings.

h. B16.42, Ductile Iron Pipe Flanges and Flanged Fittings Classes 150 and 300.
i. B16.47, Large Diameter Steel Flanges: NPS 26 Through NPS 60 Metric/Inch Standard.
j. B16.5, Pipe Flanges and Flanged Fittings NPS ½ Through NPS 24 Metric/Inch Standard.
k. B16.9, Factory-Made Wrought Steel Buttwelding Fittings.
l. B31.1, Power Piping.
m. B31.3, Process Piping.
n. B31.9, Building Services Piping.
o. C216, Heat-Shrinkable, Cross-Linked Polyolefin Coatings for the Exterior of Special Sections, Connections, and Fittings for Steel Water Pipelines.
p. PCC-1 Guidelines for Pressure Boundary Bolted Flange Joint Assembly.

6. American Welding Society (AWS): QC1, Standard for AWS Certification of Welding Inspectors.
7. American Water Works Association (AWWA):
   a. C104/A21.4, Cement-Mortar Lining for Ductile-Iron Pipe and Fittings for Water.
   b. C105/A21.5, Polyethylene Encasement for Ductile-Iron Pipe Systems.
   c. C110/A21.10, Ductile-Iron and Gray-Iron Fittings for Water.
   d. C111/A21.11, Rubber-Gasket Joints for Ductile-Iron Pressure Pipe and Fittings.
   e. C115/A21.15, Flanged Ductile-Iron Pipe with Ductile-Iron or Gray-Iron Threaded Flanges.
   f. C116/A21.16, Protective Fusion-Bonded Epoxy Coatings for the Interior and Exterior Surfaces of Ductile-Iron and Gray-Iron Fittings for Water Supply Service.
   g. C151/A21.51, Ductile-Iron Pipe, Centrifugally Cast, for Water.
   h. C153/A21.53, Ductile-Iron Compact Fittings for Water Service.
   i. C200, Steel Water Pipe - 6 in. (150 mm) and Larger.
   j. C203, Coal-Tar Protective Coatings and Linings for Steel Water Pipelines - Enamel and Tape - Hot Applied.
   k. C205, Cement-Mortar Protective Lining and Coating for Steel Water Pipe – 4 in. (100 mm) and Larger - Shop Applied.
   l. C206, Field Welding of Steel Water Pipe.
   m. C207, Steel Pipe Flanges for Waterworks Service - Sizes 4 in. Through 144 Inches (100 mm Through 3,600 mm).
   n. C208, Dimensions for Fabricated Steel Water Pipe Fittings.
   o. C210, Liquid-Epoxy Coating Systems for the Interior and Exterior of Steel Water Pipelines.
   p. C213, Fusion-Bonded Epoxy Coating for the Interior and Exterior of Steel Water Pipelines.
   q. C219, Bolted, Sleeve-Type Couplings for Plain-End Pipe.
   r. C221, Fabricated Steel Mechanical Slip-Type Expansion Joints.

s. C303, Concrete Pressure Pipe, Bar-Wrapped, Steel Cylinder Type.
t. C606, Grooved and Shouldered Joints.
u. M11, Steel Pipe - A Guide for Design and Installation.

8. ASTM International (ASTM):
   a. A36/A36M, Standard Specification for Carbon Structural Steel.
   b. A47/A47M, Standard Specification for Ferritic Malleable Iron Castings.
   c. A53/A53M, Standard Specification for Pipe, Steel, Black, and Hot-Dipped, Zinc-Coated, Welded and Seamless.
   d. A105/A105M, Standard Specification for Carbon Steel Forgings for Piping Applications.
   e. A106/A106M, Standard Specification for Seamless Carbon Steel Pipe for High-Temperature Service.
   f. A126, Standard Specification for Gray Iron Castings for Valves, Flanges, and Pipe Fittings.
   g. A153/A153M, Standard Specification for Zinc Coating (Hot-Dip) on Iron and Steel Hardware.
   h. A181/A181M, Standard Specification for Carbon Steel Forgings, for General-Purpose Piping.
   i. A193/A193M, Standard Specification for Alloy-Steel and Stainless Steel Bolting Materials for High-Temperature Service.
   j. A194/A194M, Standard Specification for Carbon and Alloy Steel Nuts for Bolts for High-Pressure or High Temperature Service or Both.
   k. A197/A197M, Standard Specification for Cupola Malleable Iron.
   l. A234/A234M, Standard Specification for Piping Fittings of Wrought Carbon Steel and Alloy Steel for Moderate and High Temperature Service.
   m. A307, Standard Specification for Carbon Steel Bolts and Studs, 60,000 psi Tensile Strength.
   n. A497/A497M, Standard Specification for Steel Welded Wire Fabric, Deformed, for Concrete Reinforcement.
   o. A536, Standard Specification for Ductile Iron Castings.
   p. A563, Standard Specification for Carbon and Alloy Steel Nuts.
   q. A572/A572M, Standard Specification for High-Strength Low-Alloy Columbium-Vanadium Structural Steel.
   r. A615/A615M Standard Specification for Deformed and Plain Billet-Steel Bars for Concrete Reinforcement.
   s. C94/C94M, Standard Specification for Ready-Mixed Concrete.
   t. C150, Standard Specification for Portland Cement.
   u. D1784, Standard Specification for Rigid Poly(Vinyl Chloride) (PVC) Compounds and Chlorinated Poly(Vinyl Chloride) (CPVC) Compounds.
   v. D1785, Standard Specification for Poly(Vinyl Chloride) (PVC) Plastic Pipe, Schedules 40, 80, and 120.
   w. D2000, Standard Classification System for Rubber Products in Automotive Applications.

x. D2464, Standard Specification for Threaded Poly(Vinyl Chloride) (PVC) Plastic Pipe Fittings, Schedule 80.
y. D2466, Standard Specification for Poly(Vinyl Chloride) (PVC) Plastic Pipe Fittings, Schedule 40.
z. D2467, Standard Specification for Poly(Vinyl Chloride) (PVC) Plastic Pipe Fittings, Schedule 80.
aa. D2564, Standard Specification for Solvent Cements for Poly(Vinyl Chloride) (PVC) Plastic Piping Systems.

9. Manufacturers Standardization Society of the Valve and Fittings Industry, Inc. (MSS): SP-43, Wrought Stainless Steel Butt-Welding Fittings.
10. National Electrical Manufacturers Association (NEMA): LI 1, Industrial Laminating Thermosetting Products.
11. National Fire Protection Association (NFPA): 24, Standard for the Installation of Private Fire Service Mains and Their Appurtenances.
12. NSF International (NSF): 61 Drinking Water System Components-Health Effects.

1.03 DEFINITIONS

A. Buried Piping: Underground in trenches and backfilled.

B. Encased Piping: Encased in concrete underground and backfilled.

C. Embedded Piping: Embedded in the walls or slabs of concrete structures.

D. Exposed Piping:

1. Aboveground.
2. Inside structures including vaults.

E. Carrier Pipe: Pipe directly enclosing the transmitted fluid.

1.04 DESIGN REQUIREMENTS

A. Process Piping:

1. For the purposes of design calculations, the following are defined:
   a. Working Pressure (psi):
      1) [Maximum Working HGL (feet) + 105 feet – Pipe Centerline Elevation (feet)] x 0.433.

1.05 SUBMITTALS

A. Action Submittals:

1. Shop Drawings:
   a. Shop Fabricated Piping:
      1) Detailed pipe fabrication or spool drawings showing pipe details, material type (ASTM or other), special fittings and bends, dimensions, coatings, piping supports, and other pertinent information.
      2) Layout drawing showing location of each pipe section and each special length; number or otherwise designate laying sequence on each piece.
      3) Bolting patterns and flange types.
      4) Pipe wall thickness or working pressure class.
   b. Product Data: Manufacturer's data for couplings, saddles, gaskets, and other pipe accessories. Indicate maximum rated working pressure and test pressure for each item.
   c. Fixed sleeve assembly to include dimensions, materials of construction including applicable ASTM standard specifications, detail views, and total weight for each complete valve assembly. Submit certified test data from the manufacturer, demonstrating that the fixed sleeve design can meet the cavitation, pressure drop, and flow requirements as indicated herein.
   d. Thrust Restraint for Restrained Joints: Details including materials, sizes, assembly ratings, and pipe attachment methods.
   e. Dissimilar Buried Pipe Joints: Joint types and assembly drawings.
   f. Pipe Corrosion Protection: Product data.
2. A complete and coordinated submittal of flanges on the project. Include information sufficient to verify complete compliance with the plans and specifications for items relating to flanges including, but not limited to:
   a. Flange class, facing, quantities and where used.
   b. Flange Details: ASME B16.1 information, ASME B16.5 information, and ASME B16.47 information (provide full listings of materials and dimensions mentioned in B14.47 Tables 28 and 31).
   c. Gasket Details: Type, material, diameter, thickness.
   d. Bolts, rods, nuts, washers: lengths, quantities, bolt/hole diameters, material strengths, torque requirements for gaskets submitted, metal finishes (zinc plated) provide materials and dimensions mentioned in PCC-1 Guidelines.
   e. Facing Details: Finish grade, faces with and without gasket groves.
   f. Mating flange facing for valves, meters, dismantling joints, insulating flanges, etc.

g. Where mated flanges are supplied by two (not one) manufacturer, submit mated flange assemblies signed jointly by both manufacturers guaranteeing the assembly is water tight.

B. Information Submittals:

1. Manufacturer's Certification of Compliance in accordance with Section 01 43 33, Manufacturers' Field Services.
2. Laboratory Testing Equipment: Certified calibrations, manufacturer's product data, and test procedures.
3. Submit certified copies of mill test reports for bolts and nuts, including coatings if specified. Provide recertification by an independent domestic testing laboratory for materials originating outside of the United States.
4. Submit affidavit of compliance with referenced standards (e.g, AWWA, ASME, ASTM, etc.).
5. Manufacturer's design calculations for fixed sleeve design.

1.06 QUALITY CONTROL

A. For welding operations, tests will be provided and performed by independent inspection and testing agency provided by UTILITIES, except where indicated in Section 33 05 01.02, Welded Steel Pipe and Fittings—Weld Before Backfill.

1.07 DELIVERY, STORAGE, AND HANDLING

A. In accordance with manufacturer's recommendations.

B. Marking at Plant: Mark pipe and fittings at plant. Include date of manufacture, manufacturer's identification, specification standard, diameter of pipe, wall thickness, dimension ratio, pipe class, pipe number for laying purposes, and other information required for type of pipe.

C. Pipe, specials, and fittings received at Project Site in damaged condition will not be accepted.

D. Store and support pipe securely to prevent accidental rolling and to avoid contact with mud, water, or other deleterious materials.

E. Flanges: Securely attach metal, hardboard, or wood protectors over entire gasket surface.

F. Threaded or Socket Welding Ends: Fit with metal, wood, or plastic plugs or caps.

G. Cement Linings and Coatings: AWWA C205, Section 6. Tightly close pipe ends with a 10-mil polyethylene plastic wrap for protection of the cement-mortar lining during shipment. Keep plastic wrap on the pipe until the time of installation.

H. Cold Weather Storage: Locate products to prevent coating from freezing to ground.

I. Handling:

1. Handle pipe with proper equipment in a manner to prevent distortion or damage. Use of hooks, chains, wire ropes, or clamps that could damage pipe, damage coating or lining, or kink and bend pipe ends is not permitted.
2. Use heavy canvas, or nylon slings of suitable strength for lifting and supporting materials.
3. Lift pipe during unloading into trench using two slings placed at quarter point of pipe section. Pipe may be lifted using one sling near center of pipe, provided pipe is guided to prevent uncontrolled swinging and no damage will result to pipe or harm to workers. Slings shall bear uniformly against pipe.
4. Do not store pipe and fittings on rocks or gravel, or other hard material that might damage pipe. This includes storage area and along pipe trench.

J. Rubber Gaskets:

1. Store in a cool, well-ventilated area.
2. Do not expose to the direct rays of the sun.
3. Do not allow contact with oils, fuels, or petroleum solvents.

PART 2 PRODUCTS

2.01 PIPING

A. As specified on Data Sheet(s) and Piping Schedule located at the end of this section as Supplement, and as specified in the individual specification(s) following this section.

B. Diameters Shown:

1. Standardized Products: Nominal size.
2. Fabricated Steel Piping (Except Cement-Lined): In accordance with ASME B36.10M.
3. Cement-Lined Steel Pipe: Lining inside diameter.

C. Identification Marking: Mark with nontoxic paint on each end both inside and outside the pipe. The minimum size of the lettering shall be 4 inches. The number marking on each spool shall correspond to the Shop Drawings.

2.02 JOINTS

A. Flanged Joints:

1. As specified on Data Sheet(s).
2. Where piping connects to wall pipes, meters, valves, or other equipment, match the pipe ends to the ends of the wall pipes, meters, valves, or equipment.

B. Restrained Joint:

1. As specified on Data Sheet(s).
2. Where piping connects to wall pipes, meters, valves, or other equipment, match the pipe ends to the ends of the wall pipes, meters, valves, or equipment.

C. Threaded Joints: NPT taper pipe threads in accordance with ASME B1.20.1

D. Thrust Tie Assemblies:

1. Tie-rod attachments relying on clamp friction with pipe barrel to restrain thrust are unacceptable.
2. Anchoring of retainer glands or thrust ties with set screws is unacceptable.
3. Thread ends of tie rods. The use of all-thread is unacceptable.
4. To be approved by ENGINEER.

2.03 PIPE CORROSION PROTECTION

A. Coatings: See Section 09 90 04, Painting, for details of coating requirements.

B. Polyethylene Encasement (Bagging): As specified on Data Sheet(s).

2.04 COUPLINGS (INCLUDING DISMANTLING JOINTS)

A. General:

1. Couplings to conform to AWWA C219.
2. Coupling linings for use in potable water systems shall be in conformance with NSF 61B.
3. Couplings to be rated for appropriate working pressure.
4. Exposed, bolted, transition couplings and sleeve-type couplings including dismantling joints shall be lined and coated with epoxy per AWWA C213, Section 09 90 04, Painting, System No. 29, and these specifications.

B. For Pipe with Flanged Ends and Push-On Ends (including Dismantling Joints):

1. Self contained flanged restrained joint fitting, including both flange components and sufficient harness bars to withstand the imposed thrust. Pressure rating equal to or greater than pipe, valve, or fitting to which the coupling is mated.
2. Flange Adapters and Spigot Pieces: Carbon steel, ASTM A283, Grade C. Bolt hole pattern to match connecting pipe and valves.
3. Provide bolts, nuts, and washers (when required) of suitable quality, workmanship, and yield strengths to ensure compatibility with the coupling design and rated pressure. Materials shall minimize the possibility of galvanic corrosion.
4. Gaskets: Elastomeric, conforming to ASTM D2000, suitable for pressure class and service.
5. Coating for flange adapter and spigot pieces: in accordance with AWWA C213 and Section 09 90 04, Painting, System No. 29.
6. Dismantling Joint Manufacturer and Product:
   a. Smith Blair; Model 975.
   b. Baker; Restrained Dismantling Joint.
   c. Viking Johnson; Restrained Dismantling Joint.

C. Transition Coupling:

1. Install for transition from asbestos cement pipe to ductile iron pipe.
2. Transition Coupling Manufacturer and Product:
   a. EJP Inc; J9 Ductile Iron.
   b. JCM Industries Inc; JCM 212 Ductile Iron.
   c. Or approved equal.

D. Bolting Materials for Couplings: Same as bolts and nuts for flanges.

E. Coatings and Lining for Couplings: Fusion bonded epoxy-lined and coated in accordance with AWWA C213 and Section 09 90 04, Painting, System No. 29.

F. Steel Middle Rings and Followers:

1. Fusion bonded epoxy-lined and coated per AWWA C213 and Section 09 90 04, Painting, System No. 29.
2. Pressure tested beyond yield point, for pressure piping.
3. Middle Ring Lengths: 10 inches.

2.05 FLANGES 36 INCHES AND SMALLER:

A. General: Forged flange material per ASTM A105/A105M. Steel flange material per ASME B16.1, ASME B16.47, and B16.5 Weld flanges to WSP (integral and loose) with complete joint penetration (CJP) per ASME. Wrap

buried flanges with wax tape per Section 33 05 01.01 and 33 05 01.02, Welded Steel Pipe and Fittings—Weld Before Backfill.

B. Working Pressures of 275 psi and Under: Use ASME B16.5 Class 150 flanges (raised face) Annex F, Table F10 and F11.

C. Working Pressures Over 275 psi: Use integral (weld neck) flanges as follows:

1. 24-Inch and Under. Use ASME B16.5 Class 300 flanges (raised face) Annex F, Table F10 and F11.
2. 26- to 36-Inch: Use ASME B16.47 (Series A), Class 300 (ring joint facing) per ASME B16.47 Tables I-26 and I-29.

D. Coordination. Mate flange pairs and gaskets so that each flange pair, facing and gasket are properly coordinated.

2.06 GASKETS

A. Pipes 24 Inches and Smaller (Raised Face Flanges): Use full-face gaskets 1/8-inch thick acrylic or aramid fiber bound with nitrile.

1. Manufacturers and Products: Garlock "Bluegard," Klinger "Klingersil C4400," or approved equal. Suitable for a pressure of 500 psi at a temperature of 400 degrees F.

B. Pipes 26 to 36 Inches (ASME Ring Joint Facing): Use ASME B16.20 gaskets.

2.07 GASKET LUBRICANT

A. Lubricant: Supplied by pipe manufacturer; no substitute or "or-equal" will be allowed.

2.08 BOLTS AND NUTS FOR FLANGES

A. Carbon steel bolts per ASTM A193, Grade B7 and nuts per ASTM A194, Grade 2H.

B. Provide bolt length not less than 1/4-inch and not more than 1/2-inch projecting in a nut-tightened position. Provide hexagonal bolt heads and nuts. Provide washers for each nut. Provide washers and nuts of the same material.

2.09 LUBRICANT FOR BOLT AND NUT THREADS

A. Lubricant: Chloride free and TRX-Synlube by Ramco, Anti-Seize by Ramco, Husk-It Husky Lube O-Seal, or approved equal.

2.10 THREADED CAPS FOR CARBON STEEL BOLT AND NUT THREADS

A. Provide threaded grease caps for flange bolts and threaded rods (including dismantling joints). Match grease cap threads to bolt threads. Provide black high density polyethylene caps. Fill caps with anticorrosive lubricant to prevent nuts and bolts from rusting and corroding. Lubricant to be suitable for use in potable water. Caps to withstand temperatures from minus 40 degrees F to 200 degrees F. Caps to be suitable to use in exposed, buried, and submerged service conditions.

1. Manufacturers and Products: Sap-Seal Products, Inc.; Advance Products and Systems, Inc., "Radolid"; or approved equal.

2.11 SLAB, FLOOR, WALL, AND ROOF PENETRATIONS

A. Pipe Sleeves: Fabricate of 3/16-inch minimum thickness steel pipe.

1. Lined and coated after fabrication with System No. 5 as specified in Section 09 90 04, Painting.
2. Seep Ring:
   a. Provide 1/4-inch minimum thickness center flange for water stoppage on sleeves in exterior or water-bearing walls.
   b. Continuously fillet weld on each side around.

B. Modular Mechanical Seal:

1. Type: Interconnected synthetic rubber links shaped and sized to continuously fill annular space between pipe and wall sleeve opening.
2. Assemble interconnected rubber links with Type 316 stainless steel bolts, nuts, and pressure plates.
3. Size modular mechanical seals according to manufacturer's instructions for the size of pipes shown to provide a watertight seal between pipe and wall sleeve opening.
4. Manufacturers and Products:
   a. Thunderline/LinkSeal, Div. Of PSI, Houston, TX; Link Seal.
   b. Calpico, Inc., South San Francisco, California; Sealing Linx.
   c. Advance Products and Systems, Lafayette, Louisiana; Innerlynx.

2.12 INSULATING FLANGES, COUPLINGS, AND UNIONS

A. Dielectric Flange and Union Manufacturers: As specified in Section 26 42 01, Pipe Bonding and Test Stations.

B. Insulating Coupling Manufacturers: As specified in Section 26 42 01, Pipe Bonding and Test Stations.

2.13 PIPE FABRICATION

A. Fabricate flanged pipe in the shop, not in the field, and delivered to the site with flanges in place and properly faced. Threaded ductile iron or cast iron flanges shall be individually fitted and machine tightened on matching threaded pipe by the manufacturer.

B. Fabricate outlets and bends in appropriate lengths so that, when installed, they will be located as shown on laying drawings.

C. Factory install pressure taps and stubs required for hydrostatic testing on the pipe.

D. Mark each pipe length on outside:

1. Size or diameter and class.
2. Manufacturer's identification and pipe serial number.
3. Location number on laying drawing.
4. Date of manufacture.

E. Code markings according to approved Shop Drawings.

2.14 VENTS

A. Vents: Standard weight welded steel pipe and epoxy lined per AWWA C213. Tape Wrap buried portions . Epoxy coat exposed portions in accordance with Section 09 90 04, Painting.

2.15 PIPING SUPPORT SYSTEMS

A. General:

1. Provide CONTRACTOR-designed system as specified herein when not shown on the Drawings.
2. Fabricate pipe supports of the correct material to general configuration indicated by catalogs when specified items are not available in specified material. Provide protective barriers between supports and piping.
3. Manufacturers' catalog figure numbers are typical of the types and quality of standard pipe supports and hangers to be provided.
4. Special support and hanger details are shown to cover typical locations where standard catalog supports are inapplicable.
5. Concrete Anchors and Anchor Bolts: Type 316 SS.
6. Hanger and Support Materials, Type 304 or 316 stainless steel for following locations: Submerged or less than 1 foot above the liquid surface. Below tops of channel walls. Under covers or slabs of channels and tanks. In other damp locations.

B. Saddle Support:

1. Pedestal Type: Schedule 40 steel pipe stanchion, saddle, and anchoring flange.
2. Nonadjustable saddle, MSS SP58 and SP69, Type 37 with U-bolt:
   a. Anvil; Figure 259.
   b. B-Line; Figure B3090.
3. Adjustable saddle, MSS SP58 and SP69, Type 38 without clamp:
   a. Anvil; Figure 264.
   b. B-Line; Figure B3093.
4. Neoprene Waffle Isolation Pad:
   a. Mason Industries; Type W.
   b. Korfund; Korpad 40.

2.16 ORIFICE PLATE INSERTS

A. General: Use in blow-off installations to reduce the pressure head from the pipeline during draining without the need to throttle the isolation valves. Provide as a unit consisting of plate and flanges by a single manufacturer.

B. Identifications: Tag orifice inserts with a stainless steel identification plate. Engrave the plate with the blow-off station as shown on the Drawings.

C. Design:

1. Each orifice insert shall consist of a unit, placed between a pair of flanges as required by the working pressures shown on the Drawings.
2. Material: Annealed Type 316 stainless steel.
3. Size: As shown on Drawings.
4. Thickness: 3/8-inch or greater, as recommended by the manufacturer.
5. Flow Rate Controlled: By tapered orifice port.
6. Orifice Shape: Concentric through the plate.
7. Edge: Tapered cut designed to cause cavitation to occur away from the metal.
8. Orientation: Face the sharp edge upstream.
9.

2.17 FLAP VALVE

A. Circular port design with offset single pivoted hinge. Cast iron flap gate and body materials conforming to ASTM A126, Class B. Bronze seat and hinge pin. Constructed with a 10 degree offset from vertical to ensure positive closure.

B. End connection: Flanged. Flange dimensions and drilling in accordance with ANSI B16.1, Class 125.

C. Manufactured by Clow Valve or approved equivalent.

2.18 FINISHES

A. Factory prepare, prime, and finish coat in accordance with Data Sheets and Piping Schedule.

PART 3 EXECUTION

3.01 GENERAL

A. Notify Construction Manager at least 2 weeks prior to fabrication of pipe or fittings.

B. Furnish feeler gauges of proper size, type, and shape for use during installation for each type of pipe furnished with rubber gasket joints.

C. Distributing Materials: Do not place materials to be hazardous to traffic or to general public, obstruct access to adjacent property, or obstruct others working in area.

3.02 EXAMINATION

A. Verify size, material, joint types, elevation, horizontal location, and pipe service of existing pipelines to be connected to new pipelines or new equipment.

B. Inspect size and location of structure penetrations to verify adequacy of wall pipes, sleeves, and other openings.

C. Damaged Pipe: Replace pipe sections that have damage to the bell end, spigot end, or barrel.

3.03 PREPARATION

A. See Piping Schedule and Section 09 90 04, Painting, for additional requirements.

B. Notify CONSTRUCTION MANAGER at least 2 weeks prior to field fabrication of pipe or fittings.

C. Damaged Coatings and Linings: Repair using original coating and lining materials in accordance with manufacturer's instructions.

D. Furnish feeler gauges of the proper size, type, and shape for use during installation for each type of pipe furnished.

3.04 INSTALLATION—GENERAL

A. Join pipe and fittings in accordance with manufacturer’s instructions, unless otherwise shown or specified.

B. Install individual pipe lengths in according to approved lay diagram. Remove and replace misplaced pipe.

C. Inspect pipe and fittings before installation, clean ends thoroughly, remove foreign matter and dirt from inside.

D. At times when the work of installing pipe is not in progress, keep openings into the pipe and the ends of the pipe in trenches or structures tightly closed to prevent entrance of small animals and foreign material into the pipe.

E. Flanged Joints:

1. Install perpendicular to pipe centerline.
2. Bolt Holes: Straddle vertical centerline, aligned with connecting equipment flanges or as shown on Drawings.
3. Use torque-limiting wrenches to ensure uniform bearing and proper bolt tightness.
4. Plastic Flanges: Install annular ring filler gasket at joints of raised-face flange.
5. Threaded ductile iron or cast iron flange joints must be shop fabricated and delivered to jobsite with flanges in-place and properly faced.
6. To provide uniform bearing and proper bolt tightness:
   a. Bolts 1 Inch and Smaller: Use torque-limiting wrenches.
   b. Bolts Greater Than 1 Inch: Use hydraulic bolt tensioners (see ASME PCC-1, paragraph 10, first Note).
7. Tighten flange bolts progressively, drawing up bolts on opposite sides gradually until bolts have uniform tightness around the flange.
8. Install grease caps.

F. Threaded and Coupled Joints:

1. Conform with ANSI B1.20.1.
2. Produce sufficient thread length to ensure full engagement when screwed home in fittings.
3. Countersink pipe ends, ream and clean chips and burrs after threading.
4. Make up connections full, with not more than three threads exposed.
5. Lubricate male threads only with thread lubricant or tape as specified on Data Sheets.

G. Couplings:

1. General:
   a. Install in accordance with manufacturer's written instructions.
      1) Metallic Piping Systems: Flexible couplings, transition couplings, and flanged coupling adapters specified.

2) Nonmetallic Piping Systems: Teflon bellows connector.
3) Concrete Encased Couplings: Sleeve type coupling.

b. Before coupling, clean pipe holdback area of oil, scale, rust, and dirt.
c. Remove pipe coating, if necessary, to obtain smooth surface.
d. Clean gaskets before installation.
e. If necessary, lubricate with gasket lubricant for installation on pipe ends.
f. Tighten coupling bolts progressively, drawing up bolts on opposite sides gradually until bolts have uniform tightness.

H. Insulating Flanges, Couplings, and Unions:

1. Install between steel and ductile iron piping connections and where shown.
2. Drill flanges oversize to accommodate insulating sleeves through the drilling using standard bolt sizes.

I. Penetrations:

1. Watertight Penetrations:
   a. Provide wall pipes with thrust collars.
   b. Provide taps for stud bolts in flanges to be set flush with wall face.
2. Nonwatertight Penetrations:
   a. Pipe sleeves with seep ring.
   b. Pipe sleeves with modular mechanical seal may be provided where fabrication of seep ring on pipe sleeve is impractical.
3. New Concrete Walls:
   a. Isolate embedded metallic piping from concrete reinforcement using coated pipe penetrations as specified in Section 09 90 04, Painting, System No. 25.
   b. Support wall pipes securely by form work to prevent contact with reinforcing steel and tie wires.

J. Ductile Iron Piping:

1. Cutting Pipe: Cut pipe with milling type cutter, rolling pipe cutter, or abrasive saw cutter. Do not flame cut.
2. Dressing Cut Ends:
   a. General: As required for the type of joint to be made.
   b. Rubber Gasketed Joints: Remove sharp edges or projections.
   c. Push-On Joints: Bevel, as recommended by pipe manufacturer.
   d. Flexible Couplings and Flanged Coupling Adapters: As recommended by the coupling or adapter manufacturer.

3.05 INSTALLATION—EXPOSED PRESSURE PIPING

A. Supports: As shown.

B. Unions or Flanges: Provide between each blocking valve and equipment to facilitate installation and removal.

C. Install piping so that no load or movement in excess of that stipulated by equipment manufacturer will be imposed upon equipment connection; install to allow for contraction and expansion without stressing pipe, joints, or connected equipment.

D. Piping clearance, unless otherwise shown:

1. Between Equipment or Equipment Piping and Adjacent Piping: Minimum 3 feet 0 inch, measured from equipment extremity and extremity of piping system including flanges, valve bodies or mechanisms, insulation, or hanger/support systems.
2. From Adjacent Work: Minimum 1 inch from nearest extremity of completed piping system including flanges, valve bodies or mechanisms, insulation, or hanger/support systems.
3. Unless otherwise shown on Drawings, do not route piping in front of or to interfere with access hatches, ladders, stairs, openings, or doors.

E. Valve Orientation: As shown where valve operating stems are shown.

3.06 INSTALLATION—BURIED PRESSURE PIPE

A. Joints:

1. Dissimilar Buried Pipes: Provide flexible mechanical compression joints for pressure pipe.
2. Concrete Encased or Embedded Pipe: Do not encase joints in concrete unless specifically shown on Drawings.

B. Placement:

1. Keep trench dry until pipe laying and joining are completed.
2. Bedding and Pipe Zone: As specified in Section 31 23 23.15, Trench Backfill
3. Exercise care when lowering pipe into trench to prevent twisting or damage to pipe. Lower pipe, fittings, and appurtenances into trench, piece by piece, by means of a crane, slings, or other suitable tools and equipment, in such a manner as to prevent damage to pipe materials, protective coatings and linings.
4. Do not drop or dump pipe materials into trench.
5. Measure for grade at pipe invert, not at top of pipe.

6. Excavate trench bottom and sides of ample dimensions to permit proper joining, welding, visual inspection, and testing of entire joint.
7. Prevent foreign material from entering pipe during placement.
8. Close and block open end of last laid pipe section when placement operations are not in progress and at close of day's work.
9. In general, lay pipe upgrade with bell ends pointing in direction of laying.
10. Depth of Cover Over Top of Pipe: As shown on the Drawings.
11. Maintain the inside of the pipe free from foreign materials and in a clean and sanitary condition until its acceptance by the Construction Manager.
12. Check gasket position with feeler gauge furnished by the pipe manufacturer, to assure proper seating.
13. After joint has been made, check pipe alignment and grade.
14. Apply wax tape wrap.
15. Place sufficient pipe zone material to secure pipe from movement before next joint is installed.
16. Take necessary precautions to prevent the pipe from floating prior to backfilling due to landslides, water entering the trench or from backfilling with CLSM. Restore and replace damaged pipe to its specified condition and grade if it is displaced due to floating.

C. Tolerances:

1. Deflection From Horizontal Line (at joints): Maximum 2 inches.
2. Deflection From Vertical Grade:
   a. Slopes Greater Than 0.5 Percent: Maximum 1 inch.
   b. Slopes 0.5 Percent or Less: Maximum 1/3 inch.
3. Vertical deflection is measured at pipe control line (centerline or invert–as called out in profile).
4. Joint Deflection: Maximum of 75 percent of manufacturer's recommendation.
5. Pipe Cover: Minimum 5.0 feet, unless otherwise shown.

3.07 INSTALLATION-ORIFICE PLATES

A. Install in blow-off assemblies in accordance with the manufacturer’s recommendations.

B. If orifice plates are used during construction for flushing or draining, replace with new orifice plates.

3.08 THRUST RESTRAINT

A. Location: Where shown and where required to restrain forces developed at pipeline tees, plugs, caps, bends, joints, and other locations where unbalanced forces exist.

B. Type: Restrained joints unless otherwise shown.

C. Thrust Ties: Anchoring of retainer glands or thrust ties with set screws is unacceptable.

D. Mechanical Joint Valve Restraint in Proprietary Restrained Joint Piping: Install pipe joint manufacturer's adapter gland follower and pipe end retainer, or thrust tie-rods and socket clamps.

E. As specified in the Data Sheets, mechanically restrained joints.

F. Ductile Iron Pipe: Restrained pipe.

3.09 CORROSION PROTECTION

A. Buried Pipe: As specified in Section 26 42 02, Galvanic Anode Cathodic Protection System.

B. Exposed Pipe: As specified in Section 09 90 04, Painting.

C. As specified in Piping Schedule, and as shown.

D. Notify CONSTRUCTION MANAGER at least 5 working days prior to start of surface preparation, coating application, and corrosion protection work.

E. Ductile Iron Pipe:

1. Exposed: As specified in Section 09 90 04, Painting, and as shown in Piping Schedule.
2. Buried: Wrap with polyethylene bagging.

F. Piping Accessories:

1. Exposed:
   a. Field paint black piping components as specified in Section 09 90 04, Painting, as applicable to base metal material.
   b. Accessories include, but are not limited to, pipe hangers, supports, expansion joints, pipe guides, flexible couplings, vent and drain valves, and fasteners.
2. Buried:
   a. Ferrous Metal and Stainless Steel Flanges and Components: System 1 epoxy as specified in Section 09 90 04, Painting. Wrap with heat shrink wrap.
   b. Bolts, Nuts, and Similar Items: Coat with bituminous paint. Wrap with wax tape wrap.
   c. Flexible Couplings, Grooved Couplings, and Similar Items: Wrap with wax tape wrap.
   d. Buried Valves and Similar Elements on Wrapped Pipelines: Coat with bituminous paint and wrap entire valve in polyethylene encasement.

G. Polyethylene Encasement: Install in accordance with AWWA C105/A21.5 and manufacturer's instructions.

H. Heat Shrink Wrap: Apply in accordance with manufacturer's instructions to surfaces that are cleaned, prepared, and primed.

I. Insulating Flanges, Couplings, and Unions:

1. Applications:
   a. Dissimilar metal piping connections.
   b. Connections to existing metallic pipe.
   c. Where required for electrically insulated connection.
2. Pipe Installation:
   a. Isolate carbon steel, ductile iron, or galvanized piping in reinforced concrete from the concrete reinforcement steel.
   b. Align and install insulating joints as shown n the Drawings and according to manufacturer's recommendations. Bolt lubricants that contain graphite or other metallic or electrically conductive components that can interfere with the insulating capabilities of the completed flange shall not be used.

J. Pipe Bonding for Buried Piping: As specified in Section 26 42 01, Pipe Bonding and Test Stations.

K. Joint Bond: As specified in Section 26 42 01, Pipe Bonding and Test Stations.

L. Cathodic Protection for Buried Piping: As specified in Section 26 42 02, Galvanic Anode Cathodic Protection System, and as shown.

3.10 VENTS AND DRAINS

A. Vents and drains at high and low points in piping required for completed system may or may not be shown.

B. Install vents on high points and drains on low points of pipelines.

3.11 CLEANING AND DISINFECTION

A. Maintain the pipe clean from sediment, cementitious materials and other debris throughout construction.

B. Following assembly and before pressure testing and substantial completion, dislodge, remove and sweep foreign matter from the pipeline.

C. Thoroughly clean with high pressure water jet interior surfaces of the pipeline. Dispose of cleaning water appropriately. Disinfection of pipelines is required only for treated water pipelines.

3.12 SUPPLEMENTS

A. Piping Schedule.

B. Data Sheets.

Number	Title
-01	Cement-Mortar-Lined Ductile Iron Pipe and Fittings

END OF SECTION

SUPPLEMENT

PIPING SCHEDULE								
Line or Location	**Size(s) (In.)**	**Installation**	**Piping Material/Spec No.**	**Joint Type(s)**	**Working Pressure (psig)**	**Coating/ Specified in Section**	**Lining/ Specified in Section**	**Remarks**
Raw Water Pipeline	≤ 66	BUR	WS/33 05 01.01 or WS/33 05 01.02	W	275-375	U/09 90 05 or TC/09 81 00	CL/33 05 01.01 or CL/33 05 01.02	Provide in-service testing or joint testing where indicated.
Raw Water Pipeline	≤ 66	EXP	WS/33 05 01.01 or WS/33 05 01.02	W or FL	275-375	E/09 90 04	CL/33 05 01.01 or CL/33 05 01.02	Provide in-service testing or joint testing where indicated
CARV	< 12	EXP	CS/33 05 01.01or CS/33 05 01.02	W or FL	275-375	E/09 90 04	E/09 90 04	Provide in-service testing or joint testing where indicated
Blowoff	≤ 16	ALL	DI/40 27 00.01	POR or FL	275-375	A/40 27 00.01	CL/33 05 01.01 or CL/33 05 01.02	Provide in-service testing or joint testing where indicated
Vault Vent	≤ 16	BUR	CS/33 05 01.01 or CS/33 05 01.02	W	150	U/09 90 05	None	
Vault Vent	≤ 16	EXP	CS/33 05 01.01 or CS/33 05 01.02	FL	150	E/40 27 00.07	None	
Pueblo West Pipeline	≤ 10	BUR	DI/40 27 00.01	POR	100 – 200	A/40 27 00.01	CL/33 05 01.01	

LEGEND

Joint Type		Material		Pressure Test		Coatings and Linings	
FL	Flange	DI	Ductile Iron	H	Hydrostatic	CL	Cement Mortar
POR	Push-On Restrained	WS	Welded Steel	I	In Service	U	Polyurethane
W	Welded	PVC	Polyvinyl Chloride	P	Pneumatic	E	Epoxy
		GS	Galvanized Steel	N/A	Not Applicable	EP	Extruded Polyolefin
		CS	Carbon Steel			TC	Tape Coating
						A	Asphalt with Polyethylene Wrap

SECTION 40 27 00.01 CEMENT-MORTAR-LINED DUCTILE IRON PIPE AND FITTINGS	
Item	**Description**
Pipe	Buried Pipe Using Push-On Joints (except as shown otherwise): AWWA C111/A21.11 and AWWA C151/A21.51, Grade 60-42-10, pressure class conforming to Tables 5 and Table 7 for Type 4 trench, 350 psi minimum working pressure. Exposed Pipe Using Flange Joints: AWWA C115/A21.15, and AWWA C151/A21.51, thickness Class 53, 350 psi minimum working pressure. Flanged Pipe: Fabricated in the shop and delivered to site with flanges in place and properly faced. Threaded Flanges: Individually fitted and machine tightened on matching threaded pipe by manufacturer. Higher pressure pipe exceeding 350 psi pressure class per manufacturer's recommendation in conformance with AWWA C111/A21.11 and AWWA C151/A21.51.
Lining	Cement-Mortar: AWWA C104/A21.4.
Coating	Asphaltic: AWWA C104/A21.4
Encasement Tube	Buried or Encased: Provide black polyethylene encasement tube (bagging), 8 mils minimum thickness, conforming to AWWA C105/A21.5, Class C free of gels, streaks, pinholes, foreign matter, undispersed raw materials, and visible defects such as tears, blisters, and thinning at folds. Install per AWWA C105/A21.5 and manufacturer's instructions. Securing Tape: Thermoplastic tape 8 mils minimum thickness, 1-inch wide, pressure sensitive adhesive face capable of bonding to metal bituminous coating, and polyethylene encased tube.
Fittings	Lined and coated same as pipe. Push-On Restrained Joint: AWWA C110/A21.10 and C111/A21.11, gray or ductile iron, 350 psi minimum working pressure. American Cast Iron Pipe Co., Flex-Ring and Lok-Ring; U.S. Pipe and Foundry, TR Flex; Pacific States Pipe, Thrust-Lock. Higher pressure pipe exceeding 350 psi pressure class per manufacturer's recommendation in conformance with AWWA C111/A21.11 and AWWA C151/A21.51. Flange: ASME B16.1, Class 125 or Class 250, raised face. Coordinate flange mating to pre-purchased valves with CONSTRUCTION MANAGER.

SECTION 40 27 00.01 CEMENT-MORTAR-LINED DUCTILE IRON PIPE AND FITTINGS	
Item	**Description**
Joints	Push-On Restrained Joint: Manufactured proprietary joint that mechanically restrains pipe to adjoining pipe. 350 psi minimum working pressure, AWWA C110/A21.10 and C111/A21.11. American Cast Iron Pipe Co., Flex-Ring and Lok-Ring; U.S. Pipe and Foundry, TR Flex; Pacific States Pipe, Thrust-Lock. Higher pressure pipe exceeding 350 psi pressure class per manufacturer's recommendation in conformance with AWWA C111/A21.11 and AWWA C151/A21.51. Flange: ASME B16.1, Class 125 or Class 250, raised face. Coordinate flange mating to pre-purchased valves with CONSTRUCTION MANAGER.
Bolting Materials	As defined in Section 40 27 00, Process Piping—General.
Gaskets	Push-On Proprietary Restrained Joints: Rubber conforming to AWWA C111/A21.11. Flanged, Water and Sewage Service: 1/8 inch thick, red rubber (SBR), hardness 80 (Shore A), rated to 200 degrees F, conforming to ASME B16.21 and ASTM D1330, Grades 1 and 2. Coordinate gaskets with flanges. Gasket pressure rating to equal or exceed the system hydrostatic test pressure. Ring gaskets are not permitted.
Joint Lubricant	Manufacturer's standard.

END OF SECTION

SECTION 40 27 02
PROCESS VALVES AND OPERATORS

PART 1 GENERAL

1.01 SCOPE OF WORK

A. Colorado Springs Utilities Water Line Extension and Service Standards are incorporated by reference.

B. Materials and methods specifically referenced in this section supersede those published by Colorado Springs Utilities.

1.02 DESCRIPTION OF SYSTEM

A. General: The equipment and materials specified are intended to be standard equipment of proven ability for use in controlling the flow of raw water under pressure for transmission pipelines.

B. This section includes materials, testing, and installation of CONTRACTOR furnished valves and installation of UTILITIES furnished valves as noted.

1.03 REFERENCES

A. The following is a list of standards that may be referenced in this section:

1. American National Standards Institute (ANSI): B16.1, Cast Iron Pipe Flanges and Flanged Fittings.
2. American Society of Mechanical Engineers (ASME): Section VIII, Boiler and Pressure Vessel Code—Section VIII—Pressure Vessels.
3. American Water Works Association (AWWA):
   a. C111/A21.11, Rubber-Gasket Joints for Ductile-Iron Pressure Pipe and Fittings.
   b. C207, Steel Pipe Flanges for Waterworks Service.
   c. C500, Metal-Seated Gate Valves for Water Supply Service.
   d. C504, Rubber-Seated Butterfly Valves.
   e. C509, Resilient-Seated Gate Valves for Water Supply Service.
   f. C510, Double Check Valve, Backflow Prevention Assembly.
   g. C540, Power-Actuating Devices for Valves and Sluice Gates.
   h. C550, Protective Epoxy Interior Coatings for Valves and Hydrants.
   i. C800, Underground Service Line Valves and Fittings.
4. ASTM International (ASTM):
   a. A276, Standard Specification for Stainless Steel Bars and Shapes.
   b. A351/A351M, Standard Specification for Castings, Austenitic, Austenitic-Ferric (Duplex), for Pressure-Containing Parts.
   c. A536, Standard Specification for Ductile Iron Castings.

d. A564/A564M, Standard Specification for Hot-Rolled and Cold-Finished Age-Hardening Stainless Steel Bars and Shapes.
e. A565, Standard Specification for Martensitic Stainless Steel Bars for High-Temperature Service.
f. B61, Standard Specification for Steam or Valve Bronze Castings.
g. B62, Standard Specification for Composition Bronze or Ounce Metal Castings.
h. B98/B98M, Standard Specification for Copper-Silicon Alloy Rod, Bar, and Shapes.
i. B127, Standard Specification for Nickel-Copper Alloy (UNS N04400) Plate, Sheet, and Strip.
j. B139, Standard Specification for Phosphor Bronze Rod, Bar and Shapes.
k. B164, Standard Specification for Nickel-Copper Alloy Rod, Bar, and Wire.
l. B194, Standard Specification for Copper-Beryllium Alloy Plate, Sheet, Strip, and Rolled Bar.
m. B584, Standard Specification for Copper Alloy Sand Castings for General Applications.
n. D429, Standard Test Methods for Rubber Property-Adhesion to Rigid Substrates.
o. D1784, Standard Specification for Rigid Poly(Vinyl Chloride) (PVC) Compounds and Chlorinated Poly(Vinyl Chloride) (CPVC) Compounds.

5. NSF International (NSF).

1.04 DESIGN REQUIREMENTS FOR CONTRACTOR FURNISHED VALVES

A. Valves:

1. For the purposes of design calculations, the following are defined:
   a. Working Pressure (psi):
      1) [Maximum Working HGL (feet) + 105 feet – Pipe Centerline Elevation (feet)] x 0.433.

1.05 SUBMITTALS FOR CONTRACTOR FURNISHED VALVES

A. Action Submittals:

1. Shop Drawings:
   a. Product data sheets for each make and model. Indicate valve Type Number, applicable Tag Number, and facility name/number or service where used.
   b. Complete catalog information, descriptive literature, specifications, and identification of materials of construction.
   c. Sizing calculations for open-close/throttle and modulating valves.

B. Informational Submittals:

1. Manufacturer's Valve Certificate of Compliance with applicable standards, in accordance with Section 01 43 33, Manufacturers' Field Services.
2. Tests and inspection data.
3. Operation and Maintenance Data as specified in Section 01 78 23, Operation and Maintenance Data.
4. Manufacturer's Certificate of Proper Installation, in accordance with Section 01 43 33, Manufacturers' Field Services.

PART 2 PRODUCTS

2.01 GENERAL

A. UTILITIES furnished valves to include actuator, only. Provide extension stem, operating nut, chain, flange bolts, flange gasket and accessories to allow for complete installation and operation.

B. CONTRACTOR provided valve to be suitable for intended service. Renewable parts not to be of a lower quality than specified.

C. Valve to be same size as adjoining pipe unless otherwise called out on the Drawings or in the Specifications.

D. Adjacent piping to fit valve ends. Notify CONSTRUCTION MANAGER and ENGINEER if specified valves cannot be provided with flanges compatible with pipe flange facings specified herein. See Section 40 27 00, Process Piping – General; Section 33 05 01.01, Welded Steel Pipe and Fittings—Weld After Backfill; and Section 33 05 01.02, Welded Steel Pipe and Fittings—Weld Before Backfill, for flange facing requirements.

E. Furnish valves with no leakage (drip-tight) in either direction at the valve rated design pressures unless otherwise allowed for in this section.

F. Size actuators to operate valve for the full range of pressures and velocities.

G. Valve to open by turning LEFT (counterclockwise).

H. Factory mount actuator and accessories.

2.02 MATERIALS

A. Bronze and brass valve components and accessories that have surfaces in contact with water to be alloys containing less than 16 percent zinc and 2 percent aluminum.

1. Approved alloys are of the following ASTM designations: B61, B62, B98/B98M (Alloy UNS No. C65100, C65500, or C66100), B139 (Alloy UNS No. C51000), B584 (Alloy UNS No. C90300 or C94700), B164, B194, and B127.
2. Stainless steel Alloy 18-8 may be substituted for bronze.

2.03 VALVES

A. Ball Valves:

1. Type V300 Ball Valve 3 Inches and Smaller for General Water and Air Service:
   a. Two-piece, standard port, NPT threaded ends, bronze body and end piece, hard chrome-plated solid bronze or brass ball, RFTE seats and packing, blowout-proof stem, adjustable packing gland, zinc-coated steel hand lever operator with venial grip, rated 600-pound WOG, 150-pound SWP, complies with MSS SP-110.
   b. Manufacturers and Products:
      1) Conbraco Apollo; 70-100.
      2) Nibco; T-580-70.
      3) Or approved equal.

B. Self-Contained Automatic Valves:

1. Type V746B Valve 2-Inch and Smaller for General Water and Air Service:
   a. Provide combination air release and vacuum valves according to the specification below.
   b. Include optional 1/4-inch NPT bleed port for all valves.
   c. End connection: screwed NPT male.
   d. Provide factory applied fusion bonded epoxy lining and coating to valve top and lower flanges.
   e. Manufacturers and Products:
      1) Vent-O-Mat; Model RBX 4021.
      2) No equals allowed.

C. Owner Furnished Butterfly Valves:

1. See Section 01 64 00, Owner-Furnished Products.

D. Owner-Furnished Self-Contained Automatic Valves:

1. See Section 01 64 00, Owner-Furnished Products.

2.04 MANUAL ACTUATOR

A. Unless otherwise indicated, furnish valves with manual actuators. Furnish valves in sizes up to and including 4 inches with direct acting lever actuators of the valve manufacturer's standard design.

B. Provide self-locking type valve actuators or equip with self-locking device as recommended by the valve manufacturer.

C. Furnish valve actuators with position indicators for quarter-turn valves.

D. Coat ferrous surfaces of the valve actuator in accordance with Section 09 90 04, Painting.

2.05 EXTENSION STEMS:

A. Design, furnish and construct stainless steel extension stems and associated hardware complete and operable as indicated on the Drawings and the provisions of this section. Include solid steel extension stems with drive collars and couplings, valve boxes with 2-inch operating nuts, and set screws, pins, and anchor bolts.

B. Extension Stems:

1. Fabricate from stainless steel and pinned to the valve actuators by means of a set screw and a locking pin at each connection location. Size extension stem diameters and set screws based on a 200 percent overload of the maximum possible developed forces between the operating nut and the valve worm gear operator input. Include a safety factor of four-to-one based on a 200 percent overload of the maximum developed combined operating force in the valve manufacturer's sizing calculations.
2. Manufacturers and Products:
   a. Trumbull Manufacturing.
   b. Or approved equal.

C. Adjustable Stem Guide:

1. Provide and install stainless steel adjustable stem guides as wall bracket with bronze guide bushing. Minimum adjustment from face-of-wall of is 2 inches.
2. Manufacturers and Products:
   a. Trumbull Manufacturing.
   b. Or approved equal.

2.06 ACCESSORIES

A. Tagging:

1. 1-1/2-inch diameter heavy brass or stainless steel tag attached with No. 16 solid brass or stainless steel jack chain for each valve operator, valve stem in valve box, valve, bearing the valve tag information.
2. Tag Information:
   a. Valve designation as shown on Plans (e.g., BO N1-1).
   b. Number of turns to close/open.
   c. Direction to open.

B. Marker Tag:

1. Cast 4-inch domed head, brass or stainless steel marker into vault slab or concrete collar.
2. Marker Tag Information:
   a. Valve designation as shown on Plans (e.g., BO N1-1).
   b. Number of turns to close/open.
   c. Direction to open.

C. T-Handled Operating Wrench:

1. One galvanized operating wrench, 4 feet long.
2. Manufacturers and Products:
   a. Mueller; No. A-24610.
   b. Clow No.; F-2520.

D. Cast Iron Valve Box: Designed for traffic loads, sliding type, with minimum of 6-inch ID shaft.

1. Box: Cast iron with minimum depth of 9 inches.
2. Lid: Cast iron, minimum depth 3 inches, marked WATER.
3. Extensions: Cast iron.

E. Gasket and Bolt Sets: See Section 40 27 00, Process Piping—General.

2.07 FACTORY FINISHING

A. Fusion Bonded Epoxy Lining and Coating:

1. Use where specified for individual valves described herein.
2. In accordance with AWWA C550 unless otherwise specified.
3. Minimum 12-mil dry film thickness except where limited by valve operating tolerances.

PART 3 EXECUTION

3.01 INSTALLATION

A. Flange Ends:

1. Flanged Valve Bolt Holes: Straddle vertical centerline of pipe.
2. Clean flanged faces, insert gasket and bolts, and tighten nuts progressively and uniformly.

B. Valve Installation and Orientation:

1. General:
   a. Install valves so handles operate from fully open to fully closed without encountering obstructions.
   b. Install valves in location for easy access for routine operation and maintenance.
   c. Install valves per manufacturer's recommendations.
2. Butterfly Valves:
   a. Unless otherwise restricted or shown on Drawings, install valve a minimum of 8 diameters downstream of an elbow or branch tee and with shaft in horizontal position.
   b. For vertical or horizontal elbows or branch tees immediately upstream of the valve, install valve with shaft in horizontal position, unless otherwise shown on Drawings.
   c. For free inlet or discharge into basins and tanks, install valve with shaft in vertical position.

C. Extension Stem for Operator: Where the depth of the valve is such that its centerline is more than 3 feet below grade, furnish an operating extension stem with 2-inch operating nut to bring the operating nut to a point 6 inches below the surface of the ground and/or box cover.

3.02 TESTS AND INSPECTION

A. Test valves while testing pipelines and in accordance with Section 33 05 01.02, Welded Steel Pipe and Fittings—Weld Before Backfill.

B. Test that valves open and close smoothly under working pressure conditions. Test that two-way valves open and close smoothly under working pressure conditions from both directions.

C. Inspect air and vacuum valves during pipeline filling and testing to verify venting and seating is fully functional.

D. Count and record number of turns to open and close valve; account for any discrepancies with manufacturer's data.

3.03 MANUFACTURER'S SERVICES FOR UTILITIES FURNISHED VALVES

A. Manufacturer services are included with UTILITIES furnished valves as follows:

1. Installation and Start-up Assistance for Vent-O-Mat Automatic Valves:
   a. The Supplier's authorized factory representative shall visit each of the six CARV sites to witness each installation and start-up activity required below.
      1) Inspection of completed installation of each valve: Inspection shall include the verification of proper field alignment and actuator assembly.
         1 working day required per CARV site.
      2) Witness start-up and field testing of each valve.
         1 working day required per CARV site.
      3) Recommend final field adjustments to ensure that the equipment installation and operation comply with the specified requirements.
         1 working day required per CARV site.
   b. Following successful installation and start-up, the Supplier's authorized factory representative shall provide written certification to the CONSTRUCTION MANAGER stating the requirements and controls have been properly installed, aligned, lubricated, adjusted, and suitable for operation.
2. Installation Instructions for DeZurik High Pressure Butterfly Valves and Vanessa Triple-Offset Valves:
   a. The Supplier's authorized factory representative shall visit the construction site the first day CONTRACTORS begins installation of valves to provide instruction to CONSTRACTOR on proper installation, adjustment and operation. Supplier will submit to CONSTRUCTION MANAGER a certificate that Supplier has provided instruction as specified, including signature of CONTRACTOR acknowledging receipt of instruction.

B. See Section 01 64 00, Owner-Furnished Products, for additional CONTRACTOR responsibilities.

END OF SECTION

SECTION 40 95 80
FIBER OPTIC COMMUNICATION SUBSYSTEM

PART 1 GENERAL

1.01 REFERENCES

A. The Work performed shall be guided by and conform to the following standards:

1. American National Standards Institute/Telecommunications Industry Association/Electronic Industries Alliance (ANSI/TIA/EIA):
   a. 568, Commercial Building Telecommunications Cabling Standard.
   b. 569, Commercial Building Standard for Telecommunication Pathways and Spaces.
   c. 758, Customer-owned Outside Plant Telecommunications Cabling Standard.
2. ASTM International (ASTM):
   a. D3035, Standard Specification for Polyethylene (PE) Plastic Pipe (DR-PR) Based on Controlled Outside Diameter.
   b. D3350, Standard Specification for Polyethylene Plastics Pipe and Fittings Material.
   c. F2160, Standard Specification for Solid Wall High Density Polyethylene (HDPE) Conduit Based on Controlled Outside Diameter (OD).
3. National Electrical Code (NEC).
4. NESC: The National Electrical Safety Code standards govern construction involving wires for power, heat, light, telephone, telegraph, or signal transmission or reception. Electrical construction of overhead and underground electrical supply and communication lines must be in conformity with the rules set forth in the national electrical safety code approved by the American National Standards Institute (ANSI) as published by the Institute of Electrical and Electronic Engineers (IEEE).
5. Society of Cable Telecommunications Engineers (SCTE) Recommended Practices for Optical Fiber Construction and Testing.
   a. Copies of the SCTE manual may be obtained from:
      Society of Cable Telecommunications Engineers
      140 Philips Road
      Exton, PA 19341-1318
      Phone: 610.363.6888
      Fax: 610.363.5898 (Membership/Administration)
      610.363.7133 (Training/Conferences)

6. Telcordia (formerly Bellcore) Generic Requirements:
   a. GR-20-CORE Generic Requirements for Optical Fiber and Fiber Optic Cable.
   b. GR-356-CORE Generic Requirements for Optical Cable Innerduct and Accessories.
   c. GR-771-CORE Generic Requirements for Fiber Optic Splice Closures.
   d. SR-1421 Special Report "Blue Book Manual of Construction Procedures.".
      1) Copies of SR-1421 manual may be obtained from:
         Direct Sales
         Telcordia Technologies, Inc.
         8 Corporate Place, PYA 3A-184
         Piscataway, NJ 08854-4156
         Phone: 800-521-2673 (US & Canada)
         Fax: 732-336-2559

1.02 ABBREVIATIONS

A. ANSI: American National Standards Institute.

B. ASTM: American Society for Testing Materials.

C. BCE: Broadband Communications Engineer.

D. BCT: Broadband Communications Technician.

E. BiCSi: Building Industry Consulting Service International.

F. BOM: Bill of Materials.

G. BTS: Broadband Transport Specialist.

H. CO: Central Office.

I. CSU: Colorado Springs Utilities

J. dB: Decibel.

K. DWDM: Dense Wavelength Division Multiplexing.

L. EIA : Electronics Industry Association.

M. FOCS: Fiber Optic Communication Subsystem.

N. FTP: Fiber termination panel.

O. HDPE: High-density polyethylene.

P. IEEE : Institute of Electrical and Electronic Engineers.

Q. km: kilometer.

R. LAN: Local area network.

S. Mbps: Megabits per second.

T. NESC: The National Electrical Safety Code.

U. OSP: Outside plant.

V. PICS: Process Instrumentation and Control System.

W. RCDD: Registered Communications Distribution Designer.

X. SCADA: System Control and Data Acquisition.

Y. SCTE: Society of Cable Television Engineers.

Z. TIA: Telecommunications Industry Association.

1.03 SYSTEM DESCRIPTION

A. The fiber optic communication subsystem will be used as the backbone for both the Southern Delivery System Process Instrumentation and Control Systems (PICS) network and the CSU ‘business” network. Spare ducts provide additional capacity for security and future networking requirements. The FOCS uses single mode cable capable of a large variety of data, voice and video transmissions including DWDM.

B. This section covers requirements for the fiber optic conduit subsystem which includes underground conduits, handholes, locate wiring, grounding and accessories. Fiber optic cable will be installed by others.

C. Fiber optic subsystem equipment locations are shown on the Drawings.

D. Construct lateral service conduits using the same materials and methods as detailed in this section. The actual service entries are detailed in the electrical Drawings.

1.04 SUBMITTALS

A. Action Submittals:

1. Shop Drawings:
   a. Bill of Materials: Listing of fiber optic conduit subsystem equipment including:
      1) Manufacturer.
      2) Model numbers.
      3) Description.
      4) Quantity supplied.
   b. Component Data:
      1) General data and descriptions.
      2) Engineering specifications and data sheets.
      3) Installation details.
2. Product Submittals: Manufacturer cut sheets.
3. CONTRACTOR and Subcontractor Qualifications:
   a. FOCS Subcontractor:
      1) Minimum of 5 years' experience providing, integrating, installing, and commissioning of similar systems.
      2) Experience installing in-ground fiber optic data system over a minimum of 10 miles.
   b. FOCS Subcontractor's Site Representative: Minimum of 5 years' experience installing similar systems.
   c. Field personnel must be trained for proper handling of fiber optic conduit and conduit installation.
   d. Provide resumes and certifications of personnel giving management and technical qualifications of supervisory, local service representative, and key personnel.
   e. Acceptance of FOCS subcontractor does not exempt FOCS subcontractor or CONTRACTOR from meeting Contract Document requirements nor does it give prior acceptance of subsystems, equipment, materials, or services.
   f. List of at least five fiber optic data communications systems over the past 5 years comparable to system specified, which have been furnished and placed into operation by prospective FOCS Subcontractor. The total length of these FO systems must be at least 50 miles, of which 5 percent must have been directionally drilled. For each system, provide the following information:
      1) Owner's name, address, telephone number, and name of current operations supervisor or other contact.
      2) Description of system hardware configuration, including major equipment items, number of nodes, and communication standards implemented.

3) Dates when contract was signed, equipment was delivered, and system was accepted by Owner. Also, include originally scheduled completion date and if different from actual date, explain why.
4) Approximate value of listed FOCS provided in dollars.
5) Length of installed system, including portion that was directionally drilled.

4. Tracer wire continuity test.

B. Informational Submittal:

1. Construction As-Built Records:
   a. Red line as-built drawings detailing the actual location of handholes and conduit showing:
      1) Handholes, with identification.
      2) Below grade conduit routings between handholes.
   b. Include GPS coordinates for handhole lids in Colorado Coordinate System, Central Zone, 0502, US Survey Feet format.

PART 2 PRODUCTS

2.01 CONDUIT

A. The conduit structure will consist of three direct buried HDPE conduits manufactured according to industry standards ASTM F2160, ASTM D3035, and ASTM D3350.

1. Size and Count: 1.25-inch nominal inside diameter, SDR 11, three.
2. Material: Smoothwall HDPE.
3. Color: Orange, blue, and white.
4. Strength: Minimum 700 pounds tensile strength, with no more than 5 percent ovalization at 700 pounds tension.
5. Pull tapes: None.
6. Lubrication: Prelubricated.
7. Minimum Identification/Marking: Manufacturer, material designation HDPE, ASTM designation, nominal inside diameter, SDR, sequential footages.
8. Packaging: Parallel all three conduits on a single reel for simultaneous placement.

B. Manufacturer and Product: Carlon; Part No. A6C6D6JNNA; or approved equal.

2.02 MARKING TAPE

A. Non-Detectable Tape:

1. Inert polyethylene, impervious to known alkalis, acids, chemicals reagents, and solvents likely to be encountered in soil.
2. Thickness: Minimum 4 mils.
3. Width: 3 inches.
4. Color: Orange.
5. Identifying Lettering: Minimum 1-inch high, permanent black lettering imprinted continuously over entire length.
   a. "CAUTION COLORADO SPRINGS UTILITIES FIBER OPTIC CABLE BURIED BELOW. CONTACT UNCC 1-800-922-1987 TO REQUEST LOCATES OR REPORT DAMAGE".
6. Manufacturers and Products:
   a. Reef Industries; Terra Tape.
   b. Mutual Industries; Non-Detectable Tape.
   c. Presco; Non-Detectable Tape
   d. Or approved equal.

2.03 HANDHOLES

A. Handhole Type:

1. Composition: Polymer concrete (box and cover).
2. Box Style: Open bottom.
3. Cover Style: Two-piece, flush fit.
4. Standards: Box and cover are required to conform to test provisions of ANSI/SCTE 77, Tier 15. Must be UL-listed.
5. Nominal Dimensions: 48 inches long by 30 inches wide by 18 inches deep.
6. Cover Engraving: "CSU FIBER" on each piece.
7. Manufacturer and Product: Quazite, PG 3048BA18 (box) and PG3048HS00 (cover), or approved equal.

2.04 GROUNDING MATERIALS

A. Grounding requirements are limited to the installed tracer wire. There are no grounding requirements for the fiber optic cable which is an all dielectric construction.

1. Install a tracer wire in one duct. The tracer wire is used to connect underground locating equipment.
2. Ground the tracer wire at every handhole location.
3. Install an 8-foot copper clad ground rod with tracer wires attached using a ground rod clamp.
4. Provide one No. 10 insulated solid copper wire for tracer wire.

5. Recommended Materials: TeleWire Part numbers are used, followed with manufacturers part numbers as available. Items may be substituted with comparable product.
   a. Tracer Wire: No. 10 AWG copper wire; green polyvinyl chloride insulated, GDW 6A 1001 04.
   b. Ground Rods: BBN 002949; 5/8-inch by 8-foot; Mfg. No. 6258.
   c. Ground Rod Clamps: BBN 006335; 1/0 Str., 5/8-inch rod; Mfg. No. AB58H.

2.05 ELECTRONIC MARKERS

A. Electronic marker ball: 3M Part No. 1401-XR; or approved equal.

2.06 MARKER POSTS

A. Marker posts equipped with test terminals.

1. Ruggedized hollow marker posts with built in terminals.

PART 3 EXECUTION

3.01 GENERAL

A. At utility crossing locations, “pothole” to determine actual utility depth, prior to installing conduit.

3.02 PREPARATION AND INSTALLATION

A. This section provides information on preparation and labeling of handholes used throughout the UTILITIES’ fiber network.

1. Handhole Preparation: Ensure handhole box and cover are not damaged.
2. Handhole Installation:
   a. Placement/Depth Preparation:
      1) Dig and cleanout a hole to accommodate the size of handhole. Place 6 inches of 1/4-inch crushed (pea) gravel on the entire area of the bottom of the hole. Cut 36-inch by 54-inch sheet of one-half inch wire mesh screen (hardware cloth) and lay it on top of the pea gravel. Set the handhole level on the base of gravel and the screen. Cut holes in the screen as necessary to accommodate conduits. Conduits should extend a minimum of 8 inches above the screen. Backfill around handhole ensuring 6-inches of bury depth below grade above top of handhole, and add another 2 inches of pea gravel inside the handhole. Place an electronic marker ball in the handhole and install cover. Backfill to grade only after proving conduit integrity,

installing/testing tracer wire, and sealing all conduits with fabricated expansion plugs.

2) The number of handholes shown on the Drawings is the minimum required to be installed. Additional handholes may be required at locations where additional directional boring is used.

b. Conduit Placement:

1) Place conduit at a minimum depth of 36 inches. In critical areas where noted on the Drawings, install fiber optic conduit with at least the minimum cover shown for the 66-inch raw water pipeline.

2) Plow, trench or directional bore conduit.

3) Employ the plowed construction method unless otherwise noted on the Drawings. Open trench construction may be allowed if access or restoration requirements prevent practical use of cable plows. Refer to Section 31 23 23.15, Trench Backfill, for backfill requirements.

4) Any route segments, which are not specifically noted as open trench must be submitted and preapproved by the ENGINEER.

5) Route segments where directional boring is required are noted on the Drawings. Directional bore of fiber optic conduit is required where fiber optic conduit is installed under existing utilities. Directional bore may be used at other locations where conduit depths exceed practical depths for plowed installation.

6) Couple conduits as necessary with aluminum barbed couplings installed with a hydraulic coupling press or by butt fusion techniques.

3. Handhole Marker Installation:

a. Install handhole markers at each handhole location.

b. Bring the appropriate wires from the handhole up into the marker post, attaching the wires to the terminals.

3.03 TESTING

A. Field Quality Control:

1. Provide equipment, instrumentation, supplies and skilled staff necessary to perform testing.

a. Test and seal ducts.

b. Notify CONSTRUCTION MANAGER 72 hours before testing and sealing.

c. Clean ducts with a bristle brush to remove debris.

d. Prove ducts by pulling a mandrel through each duct end to end.
e. If any duct is restricted, expose and repair duct or if necessary, cut out the damaged part and install a handhole.
f. Base mandrel size on the following chart:

Conduit Size	Mandrel Diameter	Mandrel Length
1-1/4"	55/64"	6.450"

2. Tracer Wire Continuity: Test tracer wire continuity between every adjacent pair of handholes.

END OF SECTION

DOCUMENTS FOR THE CONSTRUCTION OF THE

SOUTHERN DELIVERY SYSTEM
RAW WATER PIPELINE S1

Colorado Springs Utilities
It's how we're all connected

City of Fountain
Pure Colorado

SECURITY WATER DISTRICT
UTILITY DISTRICTS

"Where Eagles Soar"
PUEBLO WEST METROPOLITAN DISTRICT

VOLUME 2 OF 2
DRAWINGS

JULY 2011

UTILITIES REPRESENTATIVE:
JED CHAMBERS
COLORADO SPRINGS UTILITIES
COLORADO SPRINGS, CO
PHONE: (719) 668-9058

ENGINEER'S REPRESENTATIVE
BRUCE SPILLER, P.E.
COLORADO SPRINGS, CO
PHONE: (719) 477-4914

COLORADO LICENSED
CODY L. HENRY
39310
6/30/11
PROFESSIONAL ENGINEER

CH2MHILL

INDEX TO DRAWINGS

COLORADO LICENSED PROFESSIONAL ENGINEER JODY L. HENRY 39310 6/30/11

DSGN	E FORD
DR	B NORVILLE
CHK	G SIMPSON
APVD	J HENRY

NO.	DATE	REVISION	BY	APVD

VERIFY SCALE
BAR IS ONE INCH ON ORIGINAL DRAWING.
0 1"
IF NOT ONE INCH ON THIS SHEET, ADJUST SCALES ACCORDINGLY.

CH2MHILL
Colorado Springs, CO 80903

SOUTHERN DELIVERY SYSTEM
RAW WATER PIPELINE
SOUTH SECTION ONE

GENERAL

INDEX TO DRAWINGS

SHEET	2
DWG	S1-G-2
DATE	JULY 2011
PROJ	171473.20.SP

Colorado Springs Utilities Project Number: SDS-002 CSU Work Order Number: 1146977

FILENAME: SP101nG02d_171473.dgn PLOT DATE: 6/8/2011 PLOT TIME: 10:19:47 AM

GENERAL NOTES

1. STATIONING AND DISTANCES SHOWN ON THE DRAWINGS ARE BASED ON HORIZONTAL MEASUREMENTS AND EXPRESSED IN STATE PLANE GRID DISTANCES. CROSS SECTIONS, CROSSING DETAILS, AND REFERENCES TO LEFT AND RIGHT ON THE DRAWINGS ASSUME LOOKING IN THE DIRECTION OF INCREASING STATION ALONG PIPELINE ALIGNMENT.
2. UNLESS OTHERWISE NOTED, PIPE ELEVATIONS SHOWN ARE CENTERLINE ELEVATIONS.
3. LAY PIPE TO UNIFORM GRADE BETWEEN INDICATED ELEVATION POINTS AND IN ACCORDANCE WITH SPECIFICATION SECTION 33 05 01 02, WELDED STEEL PIPE AND FITTINGS - WELD BEFORE BACKFILL.
4. PIPELINE VERTICAL DEFLECTIONS UP TO SIX (6) DEGREES MAY BE MADE USING A BEVELED END JOINT ON EITHER SIDE OF THE LOCATION SHOWN FOR THE DEFLECTION. INDIVIDUAL BEVELED JOINT DEFLECTIONS SHALL NOT EXCEED THREE (3) DEGREES. MAINTAIN ELEVATIONS AND MINIMUM COVER AS SHOWN ON DRAWINGS.
5. THE CONSTRUCTION WORK LIMITS ARE SHOWN ON THE DRAWINGS. CONFINE CONSTRUCTION ACTIVITIES WITHIN WORK LIMITS.
6. LIMITS OF CONSTRUCTION THAT DO NOT HAVE TEMPORARY CONSTRUCTION EASEMENTS OR PERMANENT EASEMENTS OR DESIGNATED WORK LIMITS ARE LIMITED TO PUBLIC RIGHT-OF-WAY. COORDINATE/ESTABLISH CONSTRUCTION LIMITS WITH PUBLIC ENTITIES.
7. INSTALL CONSTRUCTION WORK LIMIT FENCING AS NOTED ON THE DRAWINGS OR AS DIRECTED BY CONSTRUCTION MANAGER. DO NOT INSTALL WORK LIMIT FENCING ACROSS ROAD RIGHT-OF-WAY.
8. INSTALL CONSTRUCTION WORK LIMIT FENCING 7 DAYS PRIOR TO CONSTRUCTION ACTIVITIES INCLUDING TRAVEL FROM ONE LOCATION TO ANOTHER WITHIN WORK LIMITS. PROVIDE AND MAINTAIN WORK LIMIT FENCE THROUGHOUT THE CONSTRUCTION PERIOD. OBTAIN CONSTRUCTION MANAGER'S WRITTEN PERMISSION PRIOR TO REMOVAL OF WORK LIMIT FENCING.
9. LOCATIONS OF COMBINATION AIR VALVE VAULTS, ACCESS MANWAYS, AND BLOWOFF STRUCTURES ARE SHOWN ON THE DRAWINGS. NO CHANGES IN LOCATIONS ARE ALLOWED EXCEPT AS APPROVED BY THE ENGINEER AND IN ACCORDANCE WITH SPECIFICATION SECTION 33 05 01 02 WELDED STEEL PIPE AND FITTINGS - WELD BEFORE BACKFILL.
10. PROVIDE TRENCH PLUGS WHERE SHOWN AND AS DIRECTED BY CONSTRUCTION MANAGER.
11. SUBJECT FACILITIES ARE SHOWN HEAVY LINED. SCREENING IS USED IN ORDER TO CLARIFY DRAWING. FOR EXAMPLE, STRUCTURES ARE SCREENED ON MECHANICAL DRAWINGS TO HIGHLIGHT PIPING AND EQUIPMENT.
12. INSTALL CATHODIC PROTECTION TEST STATIONS AT THE APPROXIMATE LOCATIONS SHOWN ON THE SCHEDULE LOCATED ON DWG S1-G-14, IN ACCORDANCE WITH SPECIFICATIONS, AND AS APPROVED BY CONSTRUCTION MANAGER. INSTALL ANODES AT LOCATIONS IN ACCORDANCE WITH SPECIFICATION SECTION 26 42 02, GALVANIC ANODE CATHODIC PROTECTION SYSTEM.
13. EXISTING PROPERTY LINE, RIGHT-OF-WAY AND EASEMENT INFORMATION SHOWN ON THESE DOCUMENTS WAS DEVELOPED USING LAND SURVEY PLATS PREPARED BY CRITIGEN.
14. TOPOGRAPHIC MAPPING AND PLAN VIEWS FOR DRAWINGS WERE GENERATED FROM AERIAL PHOTOGRAPHY DATED 5/18/2008.
15. PROTECT EXISTING TREES AND SHRUBS NOT DESIGNATED TO BE REMOVED.
16. PRESERVE EXISTING MONUMENTS, BENCH MARKS, RANGE TIES, PROPERTY MARKERS, REFERENCE POINTS, AND STAKES. A COLORADO LICENSED SURVEYOR IS REQUIRED TO REFERENCE, REPLACE AND REPORT ANY EXISTING LAND CORNERS, MONUMENTS, BENCHMARKS, RANGE TIES, PROPERTY MARKERS, REFERENCE POINTS, AND STAKES POTENTIALLY DISTURBED OR DESTROYED BY CONSTRUCTION.
17. REPAIR OR REPLACE EXISTING CULVERTS THAT ARE DAMAGED BY CONSTRUCTION.
18. CONTACT THE UTILITY NOTIFICATION CENTER OF COLORADO "CALL BEFORE YOU DIG" PROGRAM AT 1-800-922-1987 (OR 811) 72 BUSINESS HOURS PRIOR TO ANY EXCAVATION.
19. CONTACT UTILITY OWNERS PRIOR TO CONSTRUCTION OF UTILITY CROSSINGS IN ACCORDANCE WITH SPECIFICATION SECTION 01 31 13, PROJECT COORDINATION. PROVIDE UTILITY SUPPORT IN MANNER REQUIRED BY UTILITY OWNERS.
20. FOR UTILITY CROSSINGS GREATER THAN 10" DIAMETER, SEE 3305-762 UNLESS OTHERWISE NOTED.
21. INSTALL PIPE MARKER POSTS 3305-960 ON CENTERLINE OF PIPELINE AT STRUCTURES, BURIED ACCESS MANWAYS, AT LOCATIONS NEAR FIBER OPTIC HANDHOLES, HPI'S, AT ROAD CROSSINGS, AND AT LINE OF SIGHT AS DIRECTED BY CONSTRUCTION MANAGER.
22. RETURN CONTOURS TO PRECONSTRUCTION ELEVATIONS UNLESS OTHERWISE SHOWN. NO NEW ENCLOSED DEPRESSIONS ARE ALLOWED.
23. INSTALL FIBER OPTIC CONDUIT IN ACCORDANCE WITH SPECIFICATION SECTION 40 95 80, FIBER OPTIC COMMUNICATION SUBSYSTEM.
24. VERIFY HEIGHT AND SPAN OF CROSSING OVERHEAD ELECTRIC LINES PRIOR TO CONSTRUCTION.
25. INSTALL EITHER TYPE F OR TYPE J PIPE ZONE MATERIAL EXCEPT WHERE SHOWN ON THE DRAWINGS AND STANDARD DETAILS.

SURVEY CONTROL

POINT NAME	NORTHING	EASTING	ELEVATION	DESCRIPTION
CLEVENGER	1248315.200	3249105.975	5204.01	STAINLESS STEEL ROD WITH ACCESS LID STAMPED "CLEVENGER 1991"
CORRAL_BLUFFS	1378767.054	3258121.280	6788.15	USCGS TRIANGULATION DISK STAMPED "CORRAL BLUFFS 1879"
PUEBLO-CBL-973	1176842.746	3266338.244	4946.93	NGS BRASS DISK STAMPED "CALIBRATION BASELINE 973 1983 U.S.C."
SDS-1	1365675.811	3249458.429	6184.90	3.25" ALUMINUM CAP STAMPED "SDS 1"
SDS-2	1356851.864	3249088.332	6053.21	3.25" ALUMINUM CAP STAMPED "SDS 2"
SDS-3	1346767.071	3250590.865	5997.82	3.25" ALUMINUM CAP STAMPED "SDS 3"
SDS-4	1334963.226	3253584.921	5829.49	3.25" ALUMINUM CAP STAMPED "SDS 4"
SDS-5	1319525.733	3251004.267	5727.36	3.25" ALUMINUM CAP STAMPED "SDS 5"
SDS-6	1311290.495	3249115.118	5640.77	3.25" ALUMINUM CAP STAMPED "SDS 6"
SDS-7	1275980.612	3244487.619	5329.01	3.25" ALUMINUM CAP STAMPED "SDS 7"
SDS-8	1272438.655	3234306.298	5465.33	3.25" ALUMINUM CAP STAMPED "SDS 8"
SDS-9	1262622.927	3233038.574	5463.03	3.25" ALUMINUM CAP STAMPED "SDS 9"
SDS-10	1249942.257	3232117.619	5304.13	3.25" ALUMINUM CAP STAMPED "SDS 10"
SDS-11	1240330.711	3232286.734	5468.25	3.25" ALUMINUM CAP STAMPED "SDS 11"
SDS-12	1225582.343	3231669.126	5320.70	3.25" ALUMINUM CAP STAMPED "SDS 12"
SDS-13	1210803.056	3231935.423	5098.26	3.25" ALUMINUM CAP STAMPED "SDS 13"
SDS-14	1196341.401	3232065.878	5032.89	3.25" ALUMINUM CAP STAMPED "SDS 14"
SDS-15	1187476.811	3231961.540	4996.37	3.25" ALUMINUM CAP STAMPED "SDS 15"
SDS-16	1178196.563	3232239.942	4941.71	3.25" ALUMINUM CAP STAMPED "SDS 16"
SDS-17	1171526.900	3232244.310	4960.11	3.25" ALUMINUM CAP STAMPED "SDS 17"
SDS-18	1167871.108	3226253.994	5144.02	3.25" ALUMINUM CAP STAMPED "SDS 18"
SDS-18A	1166477.575	3229461.646	5049.15	2.5" ALUM CAP STAMPED CH2M HILL
SDS-19	1161412.073	3224324.395	4771.63	3.25" ALUMINUM CAP STAMPED "SDS 19"

SURVEY NOTES:

1. PROJECT COORDINATE SYSTEM

   HORIZONTAL DATUM: NORTH AMERICAN DATUM OF 1983, ADJUSTMENT OF 1986 (NAD 83/86)
   PROJECTION: COLORADO STATE PLANE COORDINATES, CENTRAL ZONE
   VERTICAL DATUM: NGVD 1929
   GEOID MODEL: GEOID 03
   UNITS: U.S. SURVEY FEET AT GRID

2. THE PRIMARY PROJECT CONTROL FOR SOUTHERN DELIVERY SYSTEM WAS ESTABLISHED BY KIRKHAM MICHAEL CONSULTING ENGINEERS (KM). A SURVEY CONTROL DIAGRAM WAS PREPARED BY KM AND DEPOSITED WITH THE EL PASO COUNTY CLERK AND RECORDER OFFICE ON AUGUST 10, 2004 UNDER DEPOSIT NUMBER 900110. THE PROJECT CONTROL WAS ACCEPTED BY CH2M HILL AND UTILIZED TO ESTABLISH ADDITIONAL SURVEY CONTROL USING STATIC AND FAST STATIC SURVEY TECHNIQUES.
3. COORDINATES ARE "GRID" VALUES.
4. SOUTHERN DELIVERY SYSTEM SURVEY CONTROL LISTED MAY NOT APPEAR ON THE PLAN SHEETS.

NATIONWIDE PERMIT NOTES

THE FOLLOWING NOTES ARE APPLICABLE TO AREAS THAT ARE SUBJECT TO A NWP 12:

1. TYPE K BACKFILL MUST BE NATIVE TOPSOIL FROM THE TRENCH FOR AREAS SUBJECT TO THE US ARMY CORPS OF ENGINEERS NWP 12 REQUIREMENTS. SEE DWG S1-PP-18 FOR LOCATIONS OF CROSSINGS SUBJECT TO NWP 12.
2. WHEN TEMPORARY FILLS ARE PLACED IN WETLANDS, USE A HORIZONTAL MARKER (FABRIC, CERTIFIED WEED FREE STRAW) AS APPROVED BY CONSTRUCTION MANAGER TO DELINEATE THE EXISTING GROUND ELEVATION OF WETLANDS THAT WILL BE TEMPORARILY FILLED DURING CONSTRUCTION.
3. USE AND MAINTAIN APPROPRIATE SOIL EROSION AND SEDIMENT CONTROLS IN EFFECTIVE OPERATING CONDITION DURING CONSTRUCTION.
4. SEPARATE LOAD BEARING TEMPORARY STRUCTURES IN WATERS OF THE U.S. FROM EXISTING SURFACES BY GEOTEXTILE.
5. PLACE HEAVY EQUIPMENT WORKING IN WETLANDS ON MATS OR OTHER APPROVED MEASURES IN ORDER TO MINIMIZE SOIL DISTURBANCE.
6. PERMANENTLY STABILIZE OTHER FILLS, AS WELL AS ANY WORK BELOW THE ORDINARY HIGH WATER MARK FOR A WATER OF THE U.S. AT THE EARLIEST PRACTICABLE DATE. PERFORM WORK WITHIN WATERS OF THE U.S. DURING LOW-FLOW OR NO FLOW PERIODS.

COLORADO LICENSED
JODY L. HENRY
39310
6/30/11
PROFESSIONAL ENGINEER

DSGN	E FORD				
DR	B NORVILLE				
CHK	SIMPSON/ROSSER				
APVD	J HENRY	NO.	DATE	REVISION	BY	APVD

VERIFY SCALE
BAR IS ONE INCH ON ORIGINAL DRAWING.
0 1"
IF NOT ONE INCH ON THIS SHEET, ADJUST SCALES ACCORDINGLY.

CH2MHILL
Colorado Springs, CO 80903

SOUTHERN DELIVERY SYSTEM
RAW WATER PIPELINE
SOUTH SECTION ONE

GENERAL
SOUTH SECTION ONE
GENERAL NOTES
AND SURVEY CONTROL

SHEET	3
DWG	S1-G-3
DATE	JULY 2011
PROJ	171473.20.SP

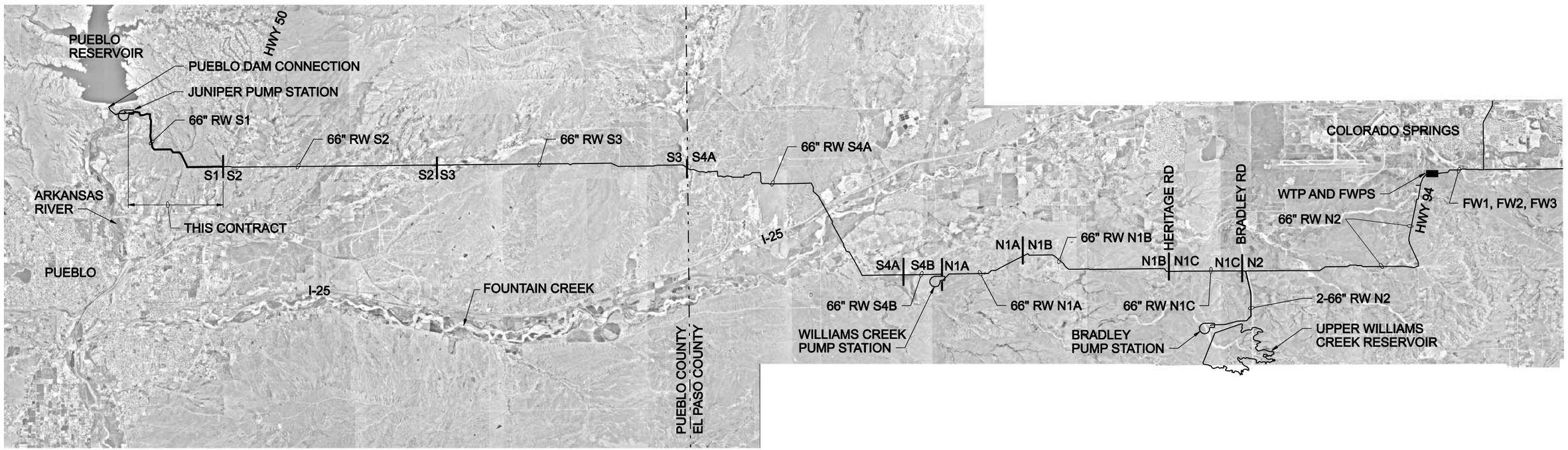

N

0 8000 16000 24000

SCALE IN FEET

COLORADO LICENSED
CODY L. HENRY
39310
6/30/11
PROFESSIONAL ENGINEER

DSGN	E FORD					
DR	B NORVILLE					
CHK	W CHRISTOFFERSON					
APVD	J HENRY	NO.	DATE	REVISION	BY	APVD

VERIFY SCALE
BAR IS ONE INCH ON ORIGINAL DRAWING.
0 1"
IF NOT ONE INCH ON THIS SHEET, ADJUST SCALES ACCORDINGLY.

CH2MHILL
Colorado Springs, CO 80903

SOUTHERN DELIVERY SYSTEM
RAW WATER PIPELINE
SOUTH SECTION ONE

GENERAL
SOUTH SECTION ONE
SDS OVERALL MAP

SHEET	4
DWG	S1-G-4
DATE	JULY 2011
PROJ	171473.20.SP

Colorado Springs Utilities Project Number: SDS-002 CSU Work Order Number: 1146977

FILENAME: SP101nG04d_171473.dgn PLOT DATE: 6/29/2011 PLOT TIME: 7:18:41 AM

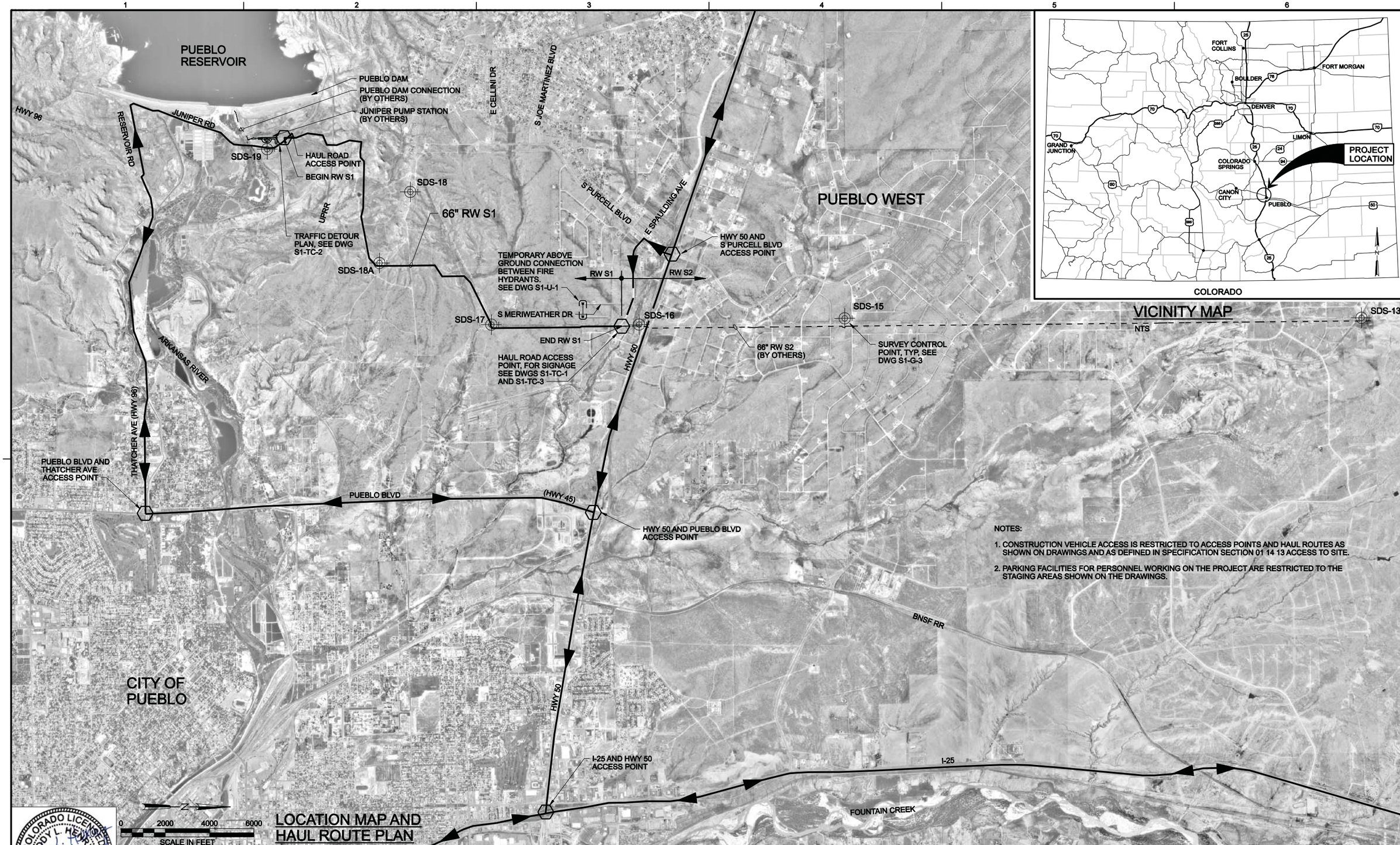

NOTES:

1. CONSTRUCTION VEHICLE ACCESS IS RESTRICTED TO ACCESS POINTS AND HAUL ROUTES AS SHOWN ON DRAWINGS AND AS DEFINED IN SPECIFICATION SECTION 01 14 13 ACCESS TO SITE.
2. PARKING FACILITIES FOR PERSONNEL WORKING ON THE PROJECT ARE RESTRICTED TO THE STAGING AREAS SHOWN ON THE DRAWINGS.

COLORADO LICENSED PROFESSIONAL ENGINEER
JODY L. HENRY
39310
10/30/11

DSGN	E FORD
DR	B NORVILLE
CHK	W CHRISTOFFERSON
APVD	J HENRY

NO.	DATE	REVISION	BY	APVD

VERIFY SCALE
BAR IS ONE INCH ON ORIGINAL DRAWING.
0 1"
IF NOT ONE INCH ON THIS SHEET, ADJUST SCALES ACCORDINGLY.

CH2MHILL
Colorado Springs, CO 80903

SOUTHERN DELIVERY SYSTEM
RAW WATER PIPELINE
SOUTH SECTION ONE

GENERAL

LOCATION MAP, VICINITY MAP, AND HAUL ROUTE PLAN

SHEET	5
DWG	S1-G-5
DATE	JULY 2011
PROJ	171473.20.SP

Colorado Springs Utilities Project Number: SDS-002 CSU Work Order Number: 1146977

FILENAME: SP101nG05d_171473.dgn PLOT DATE: 6/29/2011 PLOT TIME: 7:23:24 AM

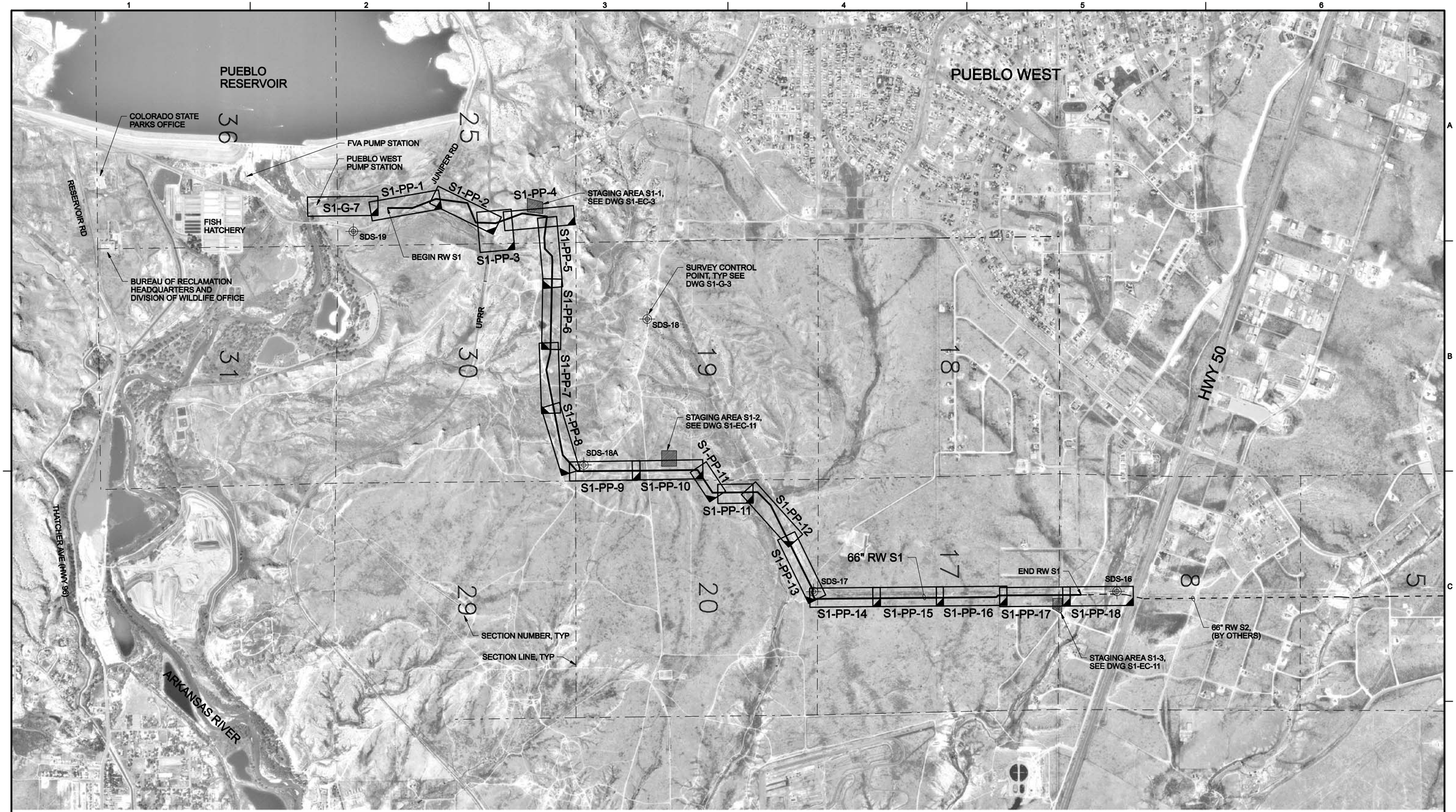

N

0 1000 2000 3000

SCALE IN FEET

COLORADO LICENSED PROFESSIONAL ENGINEER
JODY L. HENRY
39310
6/30/11

DSGN	J HENRY				
DR	B NORVILLE				
CHK	J HENRY				
APVD	J HENRY	NO.	DATE	REVISION	BY	APVD

VERIFY SCALE
BAR IS ONE INCH ON ORIGINAL DRAWING.
0 1"
IF NOT ONE INCH ON THIS SHEET, ADJUST SCALES ACCORDINGLY.

CH2MHILL
Colorado Springs, CO 80903

SOUTHERN DELIVERY SYSTEM
RAW WATER PIPELINE
SOUTH SECTION ONE

GENERAL

KEY PLAN AND STAGING AREAS

SHEET	6
DWG	S1-G-6
DATE	JULY 2011
PROJ	171473.20.SP

Colorado Springs Utilities Project Number: SDS-002 CSU Work Order Number: 1146977

FILENAME: SP101nG06d_171473.dgn PLOT DATE: 6/8/2011 PLOT TIME: 11:23:45 AM

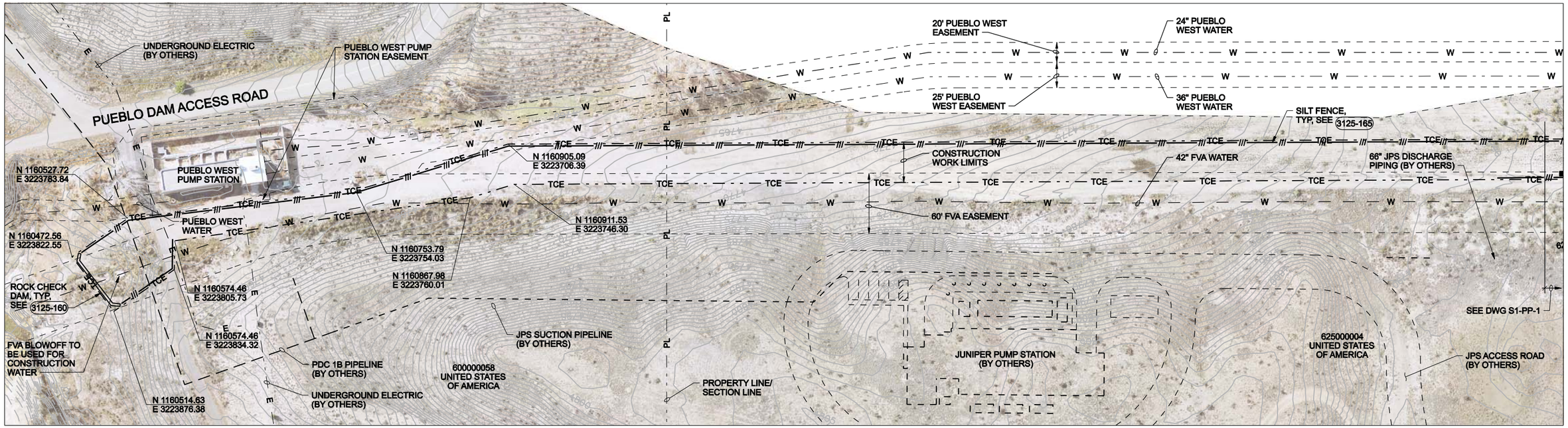

N

0 50 100 150

SCALE IN FEET

NOTES:

1. INSTALL WORK LIMIT FENCING ALONG EACH SIDE OF CONSTRUCTION WORK LIMITS, SEE DWG S1-G-14.
2. CONSTRUCTION WORK LIMITS SHOWN ON THIS DRAWING ARE TO BE USED FOR ACCESS TO FVA BLOWOFF FOR CONSTRUCTION WATER. NO MATERIAL STORAGE OR PARKING ALLOWED WITHIN WORK LIMITS SHOWN ON THIS DRAWING. COORDINATE AND ALLOW ACCESS FOR FVA STAFF AND PUEBLO WEST STAFF AS REQUIRED.\
3. FOR TRAVEL ACROSS THE FVA WATER PIPELINE, MAINTAIN PRE-CONSTRUCTION DEPTH OF COVER OVER THE FVA WATER PIPELINE, AND DO NOT EXCEED HS-20 LOADING.

COLORADO LICENSED PROFESSIONAL ENGINEER JODY L. HENRY 39310 6/30/11

DSGN	E FORD					
DR	B NORVILLE					
CHK	W CHRISTOFFERSON					
APVD	J HENRY	NO.	DATE	REVISION	BY	APVD

VERIFY SCALE
BAR IS ONE INCH ON ORIGINAL DRAWING.
0 1"
IF NOT ONE INCH ON THIS SHEET, ADJUST SCALES ACCORDINGLY.

CH2MHILL
Colorado Springs, CO 80903

SOUTHERN DELIVERY SYSTEM
RAW WATER PIPELINE
SOUTH SECTION ONE

GENERAL

ACCESS TO SOUTH FVA BLOWOFF

SHEET	7
DWG	S1-G-7
DATE	JULY 2011
PROJ	171473.20.SP

Colorado Springs Utilities Project Number: SDS-002 CSU Work Order Number: 1146977

FILENAME: SP101nG07d_171473.dgn PLOT DATE: 6/29/2011 PLOT TIME: 7:40:24 AM

ABBREVIATIONS

AB	ANCHOR BOLT, AGGREGATE BASE
ABC	AGGREGATE BASE COURSE
ABND	ABANDONED
AC	ASBESTOS CEMENT, ASPHALTIC CONCRETE
ACP	ASBESTOS CEMENT PIPE
ADJ	ADJACENT, ADJUSTABLE
ADPTR	ADAPTER
AGGR	AGGREGATE
AH	AHEAD
AISC	AMERICAN INSTITUTE OF STEEL CONSTRUCTION
ALIGN	ALIGNMENT
AL	ALUMINUM
AMT	AMOUNT
ANSI	AMERICAN NATIONAL STANDARDS INSTITUTE
APPROX	APPROXIMATELY
ASCE	AMERICAN SOCIETY OF CIVIL ENGINEERS
ASME	AMERICAN SOCIETY OF MECHANICAL ENGINEERS
ASPH	ASPHALT
ASSY	ASSEMBLY
ASTM	AMERICAN SOCIETY FOR TESTING AND MATERIALS
ASWG	AMERICAN STEEL WIRE GAGE
@	AT
AUTH	AUTHORIZE
AUTO	AUTOMATIC
AVRV	AIR VACCUM RELEASE VALVE
AVE	AVENUE
AVG	AVERAGE
AWG	AMERICAN WIRE GAUGE
AWS	AMERICAN WATER WORKS ASSOCIATION
AWWA	AMERICAN WELDING SOCIETY
BC	BEGIN CURVE
BCR	BEGIN CURVE RETURN
BETW	BETWEEN
BF	BLIND FLANGE
BFV	BUTTERFLY VALVE
BITUM	BITUMINOUS
BK	BACK
BLDG	BUILDING
BLVD, BD	BOULEVARD
BM	BENCH MARK, BEAM
BMPS	BEST MANAGEMENT PRACTICES
BO	BLOWOFF
BOT	BOTTOM
BRG	BEARING
BV	BALL VALVE
BW	BOTH WAYS
C ESMT	CONSTRUCTION EASEMENT
C&G	CURB AND GUTTER
CATH	CATHODIC
CARV	COMBINATION AIR RELEASE AND VACUUM VALVE
CB	CATCH BASIN
CCP	CONCRETE CYLINDER PIPE
CDF	CONTROL DENSITY FILL
CDOT	COLORADO DEPARTMENT OF TRANSPORTATION
CDPHE	COLORADO DEPARTMENT OF PUBLIC HEALTH AND ENVIRONMENT
CEM	CEMENT
CFM	CUBIC FEET PER MINUTE
CFS	CUBIC FEET PER SECOND
CIG	COLORADO INTERSTATE GAS
CIP	CAST IRON PIPE
CJP	COMPLETE JOINT PENETRATION
CL	CENTERLINE
CLASS	CLASSIFICATION
CLR	CLEAR
CLSM	CONTROLLED LOW STRENGTH MATERIAL
CML&C	CEMENT MORTAR LINED & COATED
CMP	CORRUGATED METAL PIPE
CNG	COLORADO NATURAL GAS
CO	CLEANOUT
COMB	COMBINATION
CONC	CONCRETE
CONN	CONNECTING
CONSTR	CONSTRUCT
CONT	CONTINUED/CONTINUATION
COORD	COORDINATE
CORP	CORPORATION
CPLG	COUPLING
CP	CATHODIC PROTECTION
CPP	CORRUGATED PLASTIC PIPE
CR	COUNTY ROAD
CSG	CASING
CT	COUNT, COURT
CTR	CENTER
CTRD	CENTERED
CU	CUBIC
CULV	CULVERT
CY	CUBIC YARD

D	STORM DRAIN, DIAMETER
DC	DEDICATED CORRIDOR
DET	DETAIL
DI	DROP INLET, DUCTILE IRON
DIA	DIAMETER
DIP	DUCTILE IRON PIPE
DIR	DIRECTION
DIST	DISTANCE
DN	DOWN
DR	DRAIN, DRIVE
DWG	DRAWING
E	EAST, EASTING, ELECTRIC
EA	EACH
ECC	ECCENTRIC
ECR	END CURB RETURN
EF	EACH FACE
ELEV, EL	ELEVATION
ELB,ELL	ELBOW
EMBED	EMBEDDED
ENGR	ENGINEER
E(OH)	OVERHEAD ELECTRIC
E(UG)	UNDERGROUND ELECTRIC
EOP	EDGE OF PAVEMENT
EQ	EQUATION
EQL	EQUAL
EQPT	EQUIPMENT
EQ SP	EQUALLY SPACED
EW	EACH WAY
EWEF	EACH WAY EACH FACE
EXC	EXCAVATE
EXP	EXPOSED, EXPANSION
EXST, EX	EXISTING
EY	EXPRESSWAY
FBO	FURNISHED BY OTHERS
FC	FLEXIBLE COUPLING
FCA	FLEXIBLE COUPLING ADAPTER
FDN	FINAL DESIGN NORTH (PIPELINE)
FE	FIELD EXPLORATION
FG	FINISH GRADE
FHY	FIRE HYDRANT
FMIS	FACILITY INFORMATION MANAGEMENT SYSTEM
FL	FLOWLINE
FLEX	FLEXIBLE
FLG	FLANGE, FLANGED
FLL, FL	FLOW LINE
FO	FIBER OPTIC
FOT	FLAT ON TOP
FPT	FEMALE PIPE THREAD
FRP	FIBERGLASS REINFORCED PLASTIC
FPS	FOOT PER SECOND
FT	FOOT, FEET
FTG	FOOTING
FVA	FOUNTAIN VALLEY AUTHORITY
FUT	FUTURE
FW	FINISHED WATER LINE
FW1	FINISHED WATER 1
FW2	FINISHED WATER 2
FW3	FINISHED WATER 3
G	GAS MAIN
GA	GAGE
GAL	GALLON
GALV	GALVANIZED
GB	GRADE BREAK
GND,GRND	GROUND
GS	GAS SERVICE LINE
GSP	GALVANIZED STEEL PIPE
GV	GATE VALVE
GVL	GRAVEL
HBP	HOT BITUMINOUS PAVING
HCL	HORIZONTAL CONTROL LINE
HDR	HEADER
HERCP	HORIZONTAL ELLIPTICAL REINFORCED CONCRETE PIPE
HG	HYDRAULIC GRADIENT
HGL	HYDRAULIC GRADE LINE
HGT	HEIGHT
HH	HANDHOLE
HI	HIGH
HORZ	HORIZONTAL
HP	HIGH POINT, HIGH PRESSURE
HPI	HORIZONTAL POINT OF INTERSECTION
HWY	HIGHWAY
HYDID	HYDRANT INSIDE DIAMETER
I-25	INTERSTATE 25
ID	INNER DIAMETER, INSIDE DIAMETER
IF	INSULATING FLANGE
IN.	INCH
INV	INVERT
IP	IRON PIPE
IRR	IRRIGATION
IV, IVV	ISOLATION VALVE VAULT

JT	JOINT
kV	KILO VOLT
L	LEFT, ANGLE, LENGTH, LOAD
LAT'L	LATERAL
LF	LINEAR FEET
LG	LENGTH
LN	LANE
LP	LOW POINT, LIQUID PETROLEUM PIPELINE
L-R	LEFT TO RIGHT
LT	LEFT
MATL	MATERIAL
MAX	MAXIMUM
MB	MACHINE BOLT
MGD	MILLION GALLONS PER DAY
MTP	MAIN TRANSMISSION PIPELINE
MFR	MANUFACTURER
MH	MANHOLE
MIN	MINIMUM, MINUTE
MISC	MISCELLANEOUS
MON	MONUMENT
MPH	MILES PER HOUR
MUTCD	MANUAL OF UNIFORM TRAFFIC CONTROL DEVICES FOR STREETS AND HIGHWAYS
MTR	METER
MVEA	MOUNTAIN VIEW ELECTRIC ASSOCIATION
N	NORTH, NORTHING
NA	NOT APPLICABLE
NAD	NORTH AMERICAN DATUM
NACE	NATIONAL GEODETIC VERTICAL DATUM
NGVD	NATIONAL ASSOCIATION OF CORROSION ENGINEERS
NIC	NOT IN CONTRACT
NO.,#	NUMBER, NUMBERING
NOM	NOMINAL
NPT	NATIONAL PIPE THREAD
NTS	NOT TO SCALE
O&M	OPERATION & MAINTENANCE
OC	ON CENTER
OD	OUTSIDE DIAMETER
OE	OVERHEAD ELECTRIC
OG	ORIGINAL GROUND
OH	OVERHEAD
OPNG	OPENING
ORIG	ORIGINAL
OSHA	OCCUPATIONAL SAFETY & HEALTH ADMINISTRATION
P	POTHOLE LOCATION, PERMANENT
PE, P/E	PERMANENT EASEMENT, POLYETHYLENE, PLAIN END
PC	POINT OF CURVE
PCC	POINT OF COMPOUND CURVE
PCCP	PRETENSIONED CONCRETE CYLINDER PIPE
PERM	PERMANENT
PI	POINT OF INTERSECTION
PL	PLATE, PLACE
PL, P/L	PROPERTY LINE,
POB	POINT OF BEGINNING
POC	POINT ON CURVE
POE	POINT OF END
PP	POWER POLE, PLAN AND PROFILE
PRC	POINT OF REVERSE CURVE
PREFAB	PREFABRICATED
PRO	PROPOSED
PS	PUMPING STATION
PSCO	PUBLIC SERVICE COMPANY COLORADO
PSF	POUNDS PER SQUARE FOOT
PSI	POUNDS PER SQUARE INCH
PSIG	POUNDS PER SQUARE INCH GAGE
PT	POINT OF TANGENCY
PUE, DE, & EE	PUBLIC UTILITY, DRAINAGE, AND EQUESTRIAN EASEMENT
PVI	POINT OF VERTICAL INTERSECTION (USED INTERCHANGABLY WITH VPI)
PVMT	PAVEMENT
PVC	POLYVINYL CHLORIDE
PW	PUEBLO WEST
R	RIGHT
R,RAD	RADIUS
RCB	REINFORCED CONCRETE BOX
RCP	REINFORCED CONCRETE PIPE
RCPA	REINFORCED CONCRET PIPE ARCH
RD	ROAD, RECORD DRAWING
RDCR	REDUCER
REINF	REINFORCE
REF	REFER, REFERENCE
REM	REMOVED
REQD	REQUIRED
RH	RODHOLE
RP	RADIUS POINT
RR	RAILROAD
RT	RIGHT
R/W,ROW	RIGHT-OF-WAY

RW	RAW WATER
RW N1	RAW WATER PIPELINE NORTH 1
RW N2	RAW WATER PIPELINE NORTH 2
RW S1	RAW WATER PIPELINE SOUTH 1
RW S2	RAW WATER PIPELINE SOUTH 2
RW S3	RAW WATER PIPELINE SOUTH 3
RW S4	RAW WATER PIPELINE SOUTH 4
S	SOUTH, SLOPE
S2	SOUTH 2
SAN,S	SANITARY SEWER MAIN
SCFM	STANDARD CUBIC FEET PER MINUTE
SCH	SCHEDULE
SD	STORM DRAIN
SDS	SOUTHERN DELIVERY SYSTEM
SDSP	SOUTHERN DELIVERY SYSTEM PIPELINE
SE	SEWAGE EFFLUENT
SECPA	SOUTHEAST COLORADO POWER ASSOCIATION
SERV	SERVICE
SF	SHEATH FOOTAGE
SH	SHEET
SHTS	SHEETS
SIG	SIGNAL
SIM	SIMILAR
SLP	SLOPE
SPEC	SPECIFICATIONS
SPRR	SOUTHERN PACIFIC RAILROAD
SQ FT	SQUARE FEET
SS	SANITARY SEWER
SST,SS	STAINLESS STEEL
STA	STATION
STD	STANDARD
STL	STEEL
STRUCT	STRUCTURE
SUB	ELECTRICAL SUB STATION
SWMP	STORMWATER MANAGEMENT PLAN
SYMM	SYMMETRICAL
T	TANGENT, TELEPHONE,
T & B	TOP AND BOTTOM
t	THICKNESS
TBM	TEMPORARY BENCHMARK
TC	TOP OF CURB, TEMPORARY CONSTRUCTION
TCE	TEMPORARY CONSTRUCTION EASEMENT
TEL	TELEPHONE
TF	TRENCH FOOTAGE
TEMP	TEMPORARY
TO	TOP OF
TOC	TOP OF CONCRETE
TOP	TOP OF PIPE
TOPO	TOPOGRAPHY
TP	TEST PIT
TRANS	TRANSITION
TRI-STATE	TRI-STATE GENERATION & TRANSMISSION ASSOCIATION, INC.
TS	TEST STATION
T(UG)	UNDERGROUND TELEPHONE
TV	TELEVISION
TYP	TYPICAL
UG	UNDERGROUND
UGE	UNDERGROUND ELECTRIC
UNO	UNLESS NOTED OTHERWISE
UPRR	UNION PACIFIC RAILROAD
UT	ULTRASONIC TESTING
V	VALVE, VENT
VB	VERTICAL BEND
VC	VERTICAL CURVE
VCP	VITRIFIED CLAY PIPE
VERT	VERTICAL
VPI	VERTICAL POINT OF INTERSECTION (USED INTERCHANGABLY WITH PVI)
VV	VACUUM VALVE
W	WATER,WEST
W/	WITH
WCPS	WILLIAMS CREEK PUMP STATION
WL	WORK LIMIT
WM	WATER METER
WS	WATER SURFACE, WATER STOP, WATER SERVICE
WSP	WELDED STEEL PIPE
W/O	WITHOUT
WSEL	WATER SURFACE ELEVATION
WT	WEIGHT
WTP	WATER TREATMENT PLANT
WY	WAY
XCEL	XCEL ENERGY

NOTE:

THIS IS A STANDARD ABBREVIATION SHEET. THEREFORE, NOT ALL ABBREVIATIONS SHOWN MAY BE USED ON THIS PROJECT.

COLORADO LICENSED PROFESSIONAL ENGINEER
GARY L. HENRY
39310
6/30/11

DSGN	E FORD
DR	B NORVILLE
CHK	W CHRISTOFFERSON
APVD	J HENRY

NO.	DATE	REVISION	BY	APVD

VERIFY SCALE
BAR IS ONE INCH ON ORIGINAL DRAWING.
0 1"
IF NOT ONE INCH ON THIS SHEET, ADJUST SCALES ACCORDINGLY.

CH2MHILL
Colorado Springs, CO 80903

SOUTHERN DELIVERY SYSTEM
RAW WATER PIPELINE
SOUTH SECTION ONE

GENERAL

ABBREVIATIONS

SHEET	8
DWG	S1-G-8
DATE	JULY 2011
PROJ	171473.20.SP

CIVIL LEGEND

EXISTING FEATURES

- OE — OVERHEAD ELECTRICAL
- E — UNDERGROUND ELECTRIC
- LP — UNDERGROUND LIQUID PETROLEUM
- T — UNDERGROUND TELEPHONE
- FO — FIBER OPTICS LINE
- G — GAS PIPELINE
- W — WATER PIPELINE
- SS — SANITARY SEWER OR SANITARY SEWER FORCE MAIN
- 5000 — CONTOUR W/ ELEVATION
- 28 — SURVEY CONTROL POINT W/ POINT NUMBER
- POWER POLE
- PL — PROPERTY LINE
- FENCE
- SILT FENCE
- WOOD FENCE
- CHAIN LINK FECE
- NON SDS PROJECT UTILITY EASEMENT
- SECTION CORNER
- 1/4 SECTION CORNER
- MANHOLE
- FIRE HYDRANT
- TELEPHONE PEDESTAL

NEW FEATURES

- S 100+00 — NEW PIPELINE W/ STATIONING
- FDS-XXX OR PL-XXX — BORE HOLE LOCATION WITH NUMBER
- COMBINATION AIR RELEASE VALVE (PLAN)
- BLOW OFF ASSEMBLY (PLAN)
- TCE — TEMPORARY CONSTRUCTION EASEMENT
- P/E — CITY OF COLORADO SPRINGS PERMANENT EASEMENT
- DC — DEDICATED CORRIDOR
- WL — WORK LIMITS
- FO — FIBER OPTIC CONDUIT
- ACCESS MANWAY
- PS1-XX — POTHOLE
- HANDHOLE
- TS — TEST STATION
- SURFACE MONITORING POINT
- STAGING AREA / TURN AROUND

NOTES:

1. UTILITY LINE TYPE QUALITY LEVEL "B" SHOWN IN LEGEND. LINE TYPES FOR EXISTING UTILITY FEATURES MAY VARY. SEE NOTES ON DWG S1-G-13.
2. SEE DWG S1-EC-1 FOR EROSION CONTROL LEGEND.

MISCELLANEOUS

SHEET IDENTIFICATION SYSTEM

SECTION (LETTER) OR DETAIL (NUMERAL) DESIGNATION — A

P-2 — SHEET NUMBER (REPLACE WITH A LINE IF TAKEN AND SHOWN ON SAME DRAWING)

• ON DRAWING WHERE SECTION OR DETAIL IS SHOWN: SHEET NUMBER(S) WHERE TAKEN

DETAIL AND SECTION DESIGNATION

3305-762

STANDARD DETAIL DESIGNATION (NUMERAL)

SHOWN ON STANDARD DETAIL DRAWING

PIPING DESIGNATION

EXAMPLE

66" RW S1

66" — NOMINAL PIPE DIAMETER

RW S1 — FLOW STREAM IDENTIFICATION LEGEND

MECHANICAL LEGEND

PIPE AND FITTING SYMBOLS

DOUBLE LINE | SINGLE LINE

- EXISTING PIPE
- NEW PIPE
- EXISTING PIPE TO BE ABANDONED
- EXISTING PIPE TO BE REMOVED
- WELDED JOINT
- GROOVED END JOINT
- FLANGED JOINT
- MECHANICAL JOINT
- BELL & SPIGOT JOINT
- HUB & SPIGOT JOINT (RUBBER GASKET)
- BALL JOINT
- GROOVED END ADAPTER FLANGE
- FLANGED COUPLING ADAPTER
- FLANGED COUPLING ADAPTER W/ THRUST TIES
- FLEXIBLE COUPLING
- FLEXIBLE COUPLING WITH THRUST TIES
- STEEL BELLOWS EXP JOINT
- ELASTOMER BELLOWS EXP JOINT
- ELBOW UP
- ELBOW DOWN
- TEE UP
- TEE DOWN
- LATERAL UP
- LATERAL DOWN
- CONCENTRIC REDUCER
- ECCENTRIC REDUCER
- UNION
- CAP

VALVE SYMBOLS

- GATE
- BUTTERFLY
- GLOBE
- BALL
- SEAT PORT ECCENTRIC PLUG
- PLUG OR COCK
- DIAPHRAM
- SWING CHECK
- BALL CHECK
- CARV
- PRESSURE CONTROL

NOTES:

1. ONLY FLANGED END CONNECTIONS ARE SHOWN HERE FOR DOUBLE LINE FITTINGS. FITTINGS WITH OTHER END PATTERNS ARE SHOWN SIMILARLY ON THE CONSTRUCTION DRAWINGS. ALSO SEE PIPING SPECIFICAITONS.
2. SYMBOLS SHOWN HERE FOR SINGLE LINE FITTINGS ARE GENERIC ONLY. REFER TO PIPING SPECIFICATIONS FOR SPECIFIC END CONNECTIONS FOR SINGLE LINE PIPE AND FITTINGS.
3. EXISTING PIPE AND EQUIPMENT IS SHOWN LIGHT-LINED AND/OR SCREENED AND IS NOTED AS EXISTING. NEW PIPING AND EQUIPMENT IS SHOWN HEAVY-LINED.

- ANCHOR
- ELBOW, 90 DEGREE
- CROSS
- TEE
- ELBOW, 45 DEGREE
- LATERAL

VALVE DESIGNATION

12", V300

- V300 — REFERENCE NUMBER AS FOUND IN SPECIFICATION SECTION 40 27 02
- V — VALVE DESIGNATION (V)
- 12" — SIZE

THIS IS A STANDARD LEGEND SHEET. THEREFORE, NOT ALL INFORMATION SHOWN MAY BE USED ON THIS PROJECT.

STRUCTURAL LEGEND

SYMBOL	DESCRIPTION
	CLSM (TYPE J) OR GROUT
OR	CONCRETE
	CHECKER PLATE
	GRATING
	STRUCTURAL STEEL
	TYPE O BACKFILL
	CONCRETE FILL
	TYPE D FILL
	TYPE E OR TYPE C FILL
	TYPE K BACKFILL
	TYPE P BACKFILL
	SUBGRADE
	AGGR BASE (TYPE G) OR GRANULAR FILL (TYPE F) OR DRAIN ROCK (TYPE H) OR GRAVEL (TYPE A)
	RIPRAP
	GRADE
	ROCK EXCAVATION

COLORADO LICENSED PROFESSIONAL ENGINEER — CODY L. HENRY — 39310 — 6/30/11

DSGN	E FORD				
DR	B NORVILLE				
CHK	W CHRISTOFFERSON				
APVD	J HENRY	NO.	DATE	REVISION	BY	APVD

VERIFY SCALE — BAR IS ONE INCH ON ORIGINAL DRAWING. 0 — 1" — IF NOT ONE INCH ON THIS SHEET, ADJUST SCALES ACCORDINGLY.

CH2MHILL — Colorado Springs, CO 80903

SOUTHERN DELIVERY SYSTEM
RAW WATER PIPELINE
SOUTH SECTION ONE

GENERAL

CIVIL/STRUCTURAL/MECHANICAL LEGENDS

SHEET	9
DWG	S1-G-9
DATE	JULY 2011
PROJ	171473.20.SP

Colorado Springs Utilities Project Number: SDS-002 CSU Work Order Number: 1146977

FILENAME: SP101nG09d_171473.dgn PLOT DATE: 6/8/2011 PLOT TIME: 1:11:18 PM

DESIGN CRITERIA

1. DESIGN PER ACI 318-08 BUILDING CODE REQUIREMENTS FOR STRUCTURAL CONCRETE AND AISC 360-05 SPECIFICATION FOR STRUCTURAL STEEL BUILDINGS.
2. REFER TO THE DRAWINGS FOR EACH INDIVIDUAL STRUCTURE FOR ADDITIONAL AND SPECIFIC STRUCTURE LOADINGS AND REQUIREMENTS.
3. ROOF LOADS:
   30 PSF SNOW LOAD
   Ce = 1.0
   I = 1.1
   H-20 VEHICLE LOAD

   DEFLECTION CRITERIA FOR ROOF FRAMING MEMBERS:
   TOTAL LOAD L/ 240
   LIVE LOAD L/ 360
   WHERE L IS THE MEMBERS SPAN LENGTH
4. SOIL DESIGN PARAMETERS:
   A. NET ALLOWABLE SOIL BEARING PRESSURES: 2500 PSF
   B. EQUIVALENT DRAINED FLUID PRESSURES FOR GRANULAR BACKFILL SOILS:
      ACTIVE: 35 PSF
      AT REST: 55 PSF
      PASSIVE: 310 PSF
   C. EQUIVALENT UNDRAINED FLUID PRESSURES FOR GRANULAR BACKFILL SOILS:
      ACTIVE: 85 PSF
      AT REST: 95 PSF
      PASSIVE: 205 PSF
   D. EQUIVALENT DRAINED FLUID PRESSURES FOR CLAYEY BACKFILL SOILS:
      ACTIVE: 90 PSF
      AT REST: 105 PSF
      PASSIVE: 120 PSF
   E. EQUIVALENT UNDRAINED FLUID PRESSURES FOR CLAYEY BACKFILL SOILS:
      ACTIVE: 110 PSF
      AT REST: 115 PSF
      PASSIVE: 100 PSF

GENERAL INFORMATION

1. DESIGN DETAILS ARE INTENDED TO BE TYPICAL AND APPLY TO SIMILAR SITUATIONS OCCURRING THROUGHOUT THE PROJECT, WHETHER OR NOT THEY ARE KEYED IN EACH LOCATION. CONSULT THE ENGINEER FOR REVIEW PRIOR TO CONSTRUCTION.
2. VERIFY OPENING DIMENSIONS IN WALLS, SLABS, AND DECKS WITH THE ARCHITECTURAL, MECHANICAL, HVAC AND ELECTRICAL DRAWINGS.
3. FOR NUMBER, TYPE, SIZE, ARRANGEMENT, AND/OR LOCATION OF EQUIPMENT PADS SEE ARCHITECTURAL, MECHANICAL, ELECTRICAL, HVAC AND PLUMBING DRAWINGS. COORDINATE WITH EQUIPMENT SUPPLIER PRIOR TO PLACING SLABS, WALLS AND FOUNDATIONS. COORDINATE MECHANICAL, ELECTRICAL AND HVAC PIPING OPENINGS WITH MECHANICAL, ELECTRICAL AND HVAC DRAWINGS.
4. NO STRUCTURAL MEMBERS SHALL BE CUT FOR PIPES, DUCTS, ETC, UNLESS SPECIFICALLY DETAILED OR APPROVED IN WRITING BY THE ENGINEER.
5. VISITS TO THE JOB SITE BY THE ENGINEER TO OBSERVE THE CONSTRUCTION DO NOT IN ANY WAY MEAN THAT ENGINEER IS GUARANTORS OF THE CONSTRUCTOR'S WORK, NOR RESPONSIBLE FOR THE COMPREHENSIVE OR SPECIAL INSPECTIONS, COORDINATION, SUPERVISION, NOR SAFETY AT THE JOB SITE.
6. SPECIAL INSPECTION AND TESTING (OWNER FURNISHED) IS REQUIRED TO VERIFY INSTALLATION IN ACCORDANCE WITH THE CONTRACT DOCUMENTS ON THE FOLLOWING PORTIONS OF THE WORK:
   CONCRETE PLACEMENT
   REINFORCING STEEL PLACEMENT
   ANCHORS, EMBEDS AND BOLTS INSTALLED IN CONCRETE
   HIGH STRENGTH BOLTS
   GRADING, EXCAVATION, AND FILLING
7. SPECIFIED CONCRETE TESTING DURING CONSTRUCTION WILL BE OWNER FURNISHED. LABORATORY TEST MIXES ARE SPECIFIED.

FOUNDATIONS

1. REFER TO SDS GEOTECHNICAL DATA REPORT:
   - RAW WATER PIPELINE - SOUTH SECTION BY GEI CONSULTANTS, INC. DATED DECEMBER 14, 2005, SDS GEOTECHNICAL DESIGN REPORT
   - RAW WATER PIPELINE - SOUTH SECTION BY GEI CONSULTANTS, INC. DATED NOVEMBER 13, 2006, AND SDS GEOTECHNICAL DATA SUMMARY FOR FIVE LOCATIONS ALONG SOUTH PIPELINE ALIGNMENT - S1 BY RJH CONSULTANTS, INC. DATED JANUARY 11, 2011.
2. SHORE EXCAVATION AS REQUIRED TO PREVENT SUBSIDENCE OR DAMAGE TO ADJACENT EXISTING STRUCTURES, STREETS, UTILITIES, ETC.
3. FOUNDATION SLABS, SLABS-ON-GRADE AND WALL AND COLUMN FOUNDATIONS SPECIFICALLY NOTED TO BE ON FILL SHALL BEAR ON COMPACTED GRANULAR FILL OR CLSM AS SPECIFIED.
4. NO BACKFILL SHALL BE PLACED BEHIND WALLS UNTIL THE WALL'S AND TOP SUPPORTING SLAB'S CONCRETE HAVE ATTAINED 100% OF THEIR SPECIFIED COMPRESSIVE STRENGTH, OR UNTIL TOP-OF-WALL FRAMING SYSTEMS, INCLUDING DIAPHRAGMS, HAVE BEEN COMPLETED.
5. NO BACKFILL SHALL BE PLACED BEHIND CANTILEVERED, FREE TOP WALLS UNTIL THE CONCRETE HAS ATTAINED 100% OF ITS SPECIFIED COMPRESSIVE STRENGTH.

FORMWORK, SHORING AND BRACING

1. THE STRUCTURES SHOWN ON THE DRAWINGS HAVE BEEN DESIGNED FOR STABILITY UNDER FINAL CONDITIONS ONLY. THE DESIGN SHOWN DOES NOT INCLUDE THE NECESSARY COMPONENTS OR EQUIPMENT FOR THE STABILITY OF THE STRUCTURES DURING CONSTRUCTION. WORK RELATING TO CONSTRUCTION ERECTION METHODS, BRACING, SHORING, RIGGING, GUYS, SCAFFOLDING, FORMWORK, AND OTHER WORK AIDS ARE REQUIRED TO SAFELY PERFORM THE WORK SHOWN.
2. TEMPORARY SHORING SHALL REMAIN IN PLACE UNTIL ELEVATED CONCRETE FLOOR OR SLABS HAVE REACHED 28 DAY DESIGN STRENGTH AS DETERMINED BY CYLINDER BREAKS.

CONCRETE REINFORCING

1. THE MINIMUM REINFORCING FOR CONCRETE WALLS AND SLABS SHALL BE AS FOLLOWS:

WALL THICKNESS	REINF EACH WAY	LOCATION
6"	#4@12"	CENTERED
8"	#5@12"	CENTERED
10"	#4@12"	EACH FACE
12"	#5@12"	EACH FACE

   PROVIDE LARGER SIZES AND MORE REINFORCING IN SECTIONS OF CONCRETE WHERE REQUIRED BY THE DETAILS ON THE DRAWINGS OR BY THE SPECIFICATIONS.
2. CLEARANCE FOR REINFORCEMENT BARS, UNLESS SHOWN OTHERWISE, SHALL BE:
   WHEN PLACED ON GROUND: 3"

   ALL OTHER CONCRETE SURFACES:
   #5 BAR OR SMALLER 1 1/2"
   #6 BAR OR LARGER 2"
3. REFER TO WALL CORNER AND WALL INTERSECTION REINFORCING STANDARD DETAIL 0330-003. WALL CORNER REINFORCING SIZES AND SPACINGS SHALL BE AS SHOWN ON THE DRAWINGS AND REFERENCED TO THIS DETAIL. TYPICAL HORIZONTAL WALL REINFORCING SHALL LAP WITH THE CORNER HORIZONTAL REINFORCING.
4. BENDS, UNLESS OTHERWISE SHOWN, SHALL BE 90 DEGREE ACI 318 STANDARD HOOKS.
5. WALL CORNER AND WALL INTERSECTION REINFORCEMENT BARS SHALL BE CONTINUOUS AROUND CORNERS AND THROUGH COLUMNS OR PILASTERS. REINFORCEMENT SHALL BE EXTENDED INTO CONNECTING WALLS AND LAPPED ON THE OPPOSITE FACE OF THE CONNECTING WALLS, AS INDICATED IN STANDARD DETAIL 0330-003.
6. VERTICAL WALL BARS SHALL BE LAPPED WITH DOWELS FROM BASE SLABS AND EXTENDED INTO THE TOP FACE OF ROOF SLABS AND LAPPED WITH TOP SLAB REINFORCEMENT. PROVIDE A MINIMUM OF FOUR FULL HEIGHT VERTICAL BARS WITH MATCHING DOWELS AT WALL ENDS, CORNERS AND INTERSECTIONS WITH SIZE TO MATCH TYPICAL VERTICAL REINFORCING STEEL SHOWN OR REQUIRED BY NOTES ABOVE.
7. SLAB AND BEAM TOP BAR SPLICES SHALL BE LOCATED AT MIDSPAN AND BOTTOM BAR SPLICES SHALL BE LOCATED AT SUPPORTS.
8. REINFORCEMENT BENDS AND LAPS, UNLESS OTHERWISE NOTED, SHALL SATISFY THE FOLLOWING MINIMUM REQUIREMENTS:

MINIMUM CONCRETE DESIGN STRENGTH = 4,000 PSI						GRADE 60 REINFORCING STEEL				
BAR SIZE		#3	#4	#5	#6	#7	#8	#9	#10	#11
LAP SPLICE LENGTH										
SPACING<6"	TOP BAR *	1'-4"	2'-0"	3'-0"	4'-0"	5'-10"	6'-8"	7'-7"	8'-6"	9'-5"
	OTHER BAR	1'-4"	1'-7"	2'-4"	3'-1"	4'-6"	5'-2"	5'-10"	6'-7"	7'-3"
SPACING>6"	TOP BAR *	1'-4"	1'-8"	2'-0"	2'-5"	3'-6"	4'-0"	5'-0"	6'-2"	7'-5"
	OTHER BAR	1'-4"	1'-4"	1'-7"	1'-10"	2'-9"	3'-1"	3'-10"	4'-9"	5'-8"
EMBEDMENT LENGTH										
SPACING<6"	TOP BAR *	1'-0"	1'-7"	2'-4"	3'-1"	4'-6"	5'-2"	5'-10"	6'-7"	7'-3"
	OTHER BAR	1'-0"	1'-3"	1'-9"	2'-5"	3'-6"	4'-0"	4'-6"	5'-1"	5'-7"
SPACING>6"	TOP BAR *	1'-0"	1'-3"	1'-7"	1'-10"	2'-9"	3'-1"	3'-10"	4'-9"	5'-8"
	OTHER BAR	1'-0"	1'-0"	1'-3"	1'-5"	2'-1"	2'-5"	3'-0"	3'-8"	4'-5"

* TOP BARS SHALL BE DEFINED AS ANY HORIZONTAL BARS PLACED SUCH THAT MORE THAN 12" OF CONCRETE IS CAST IN THE MEMBER BELOW THE BAR IN ANY SINGLE POUR. HORIZONTAL WALL BARS ARE CONSIDERED TOP BARS.

CONCRETE

1. 28-DAY CAST-IN-PLACE CONCRETE STRENGTHS:
   TYPICAL: 4500 PSI
   CONCRETE FILL: 2500 PSI
2. REINFORCING STEEL:
   TYPICAL: ASTM A615, GRADE 60
   TO BE WELDED: ASTM A706, GRADE 60
3. FABRICATION AND PLACEMENT OF REINFORCING STEEL SHALL BE IN ACCORDANCE WITH CRSI MSP-1 "MANUAL OF STANDARD PRACTICE" AND ACI 301 "SPECIFICATIONS FOR STRUCTURAL CONCRETE FOR BUILDINGS".
4. CONTINUOUS WATERSTOP AS SPECIFIED SHALL BE INSTALLED IN CONSTRUCTION JOINTS IN WALLS OF BELOW GRADE STRUCTURES, EXCEPT WHERE SPECIFICALLY NOTED OTHERWISE.
5. CONSTRUCTION JOINTS INDICATED ARE SUGGESTED LOCATIONS. REVISED LOCATION OF JOINTS, SUBJECT TO SPECIFIED REQUIREMENTS, SHALL BE SUBMITTED TO THE ENGINEER FOR REVIEW BY THE ENGINEER. ADDITIONAL CONSTRUCTION JOINT LOCATIONS, AS REQUIRED FOR CONSTRUCTION, SHALL BE SUBMITTED TO THE ENGINEER FOR REVIEW.
6. ROUGHEN AND CLEAN CONSTRUCTION JOINTS IN WALLS AND SLABS AS SPECIFIED PRIOR TO PLACING ADJACENT CONCRETE. SANDBLASTING OR OTHER PREPARATION OF HORIZONTAL AND VERTICAL JOINTS IS REQUIRED.
7. COORDINATE PLACEMENT OF OPENINGS, CURBS, DOWELS, SLEEVES, CONDUITS, BOLTS AND INSERTS PRIOR TO PLACEMENT OF CONCRETE.
8. NO ALUMINUM CONDUIT OR PRODUCTS CONTAINING ALUMINUM OR ANY OTHER MATERIAL INJURIOUS TO THE CONCRETE SHALL BE EMBEDDED IN THE CONCRETE.
9. CONDUIT SHALL NOT BE PLACED PARALLEL WITH BEAM OR COLUMN REIFORCEMENT UNLESS SPECIFICALLY INDICATED IN DRAWINGS.

STRUCTURAL WELDING

1. WELDS SHALL CONFORM TO AWS D1.1 LATEST EDITION AS SPECIFIED.
2. WELDS FOUND DEFECTIVE SHALL BE REPAIRED IN ACCORDANCE WITH AWS D1.1, 5.26
3. INTERMITTENT WELDS SHALL BE UTILIZED AT ALL FIELD WELDS AND EMBED PLATES AND ANGLES TO AVOID SPALLING OR CRACKING OF THE EXISTING CONCRETE.
4. BUTT JOINT WELDS SHALL BE COMPLETE JOINT PENETRATION (CJP) UNLESS INDICATED OTHERWISE.
5. A CERTIFIED WELDING INSPECTOR (CWI) SHALL BE PRESENT WHEN FIELD WELDING IS PERFORMED. THE CWI SHALL PERFORM 100% VISUAL INSPECTION OF WELDS PRIOR TO ASSEMBLY, DURING ASSEMBLY, DURING WELDING, AND AFTER WELDING.

STRUCTURAL STEEL AND METAL FABRICATIONS

1. STRUCTURAL STEEL SHALL CONFORM TO THE FOLLOWING:
   W - SHAPES A992
   MISCELLANEOUS SHAPES INCLUDING ANGLES, CHANNELS, PLATES, ETC. A36
   SQUARE OR RECTANGULAR STEEL TUBING A500, GRADE B
   STEEL PIPE A501 OR A53, GRADE B
2. STRUCTURAL STEEL SHALL BE FABRICATED AND ERECTED IN CONFORMANCE WITH THE AISC MANUAL OF STEEL CONSTRUCTION, CURRENT EDITION, AND CURRENT OSHA STANDARDS.
3. BOLTS SHALL BE HIGH STRENGTH BOLTS CONFORMING TO THE FOLLOWING EXCEPT WHERE SPECIFICALLY INDICATED OTHERWISE:
   UNLESS SHOWN OTHERWISE A325-N
   SLIP CRITICAL A325-SC
   MACHINE BOLTS (MB) AND ANCHOR BOLTS (AB)
   STAINLESS STEEL A193
   GALVANIZED STEEL A153
4. ITEMS TO BE EMBEDDED IN CONCRETE SHALL BE CLEAN AND FREE OF OIL, DIRT AND PAINT.
5. NO HOLES OTHER THAN THOSE SPECIFICALLY DETAILED SHALL BE ALLOWED THROUGH STRUCTURAL STEEL MEMBERS. NO CUTTING OR BURNING OF STRUCTURAL STEEL IS PERMITTED WITHOUT THE APPROVAL OF THE ENGINEER.

COLORADO LICENSED PROFESSIONAL ENGINEER GODY L. HENRY 39310 6/30/11

DSGN	H ROJAS
DR	B NORVILLE
CHK	B SHERMAN
APVD	J HENRY

NO.	DATE	REVISION	BY	APVD

VERIFY SCALE
BAR IS ONE INCH ON ORIGINAL DRAWING.
0 1"
IF NOT ONE INCH ON THIS SHEET, ADJUST SCALES ACCORDINGLY.

CH2MHILL
Colorado Springs, CO 80903

SOUTHERN DELIVERY SYSTEM
RAW WATER PIPELINE
SOUTH SECTION ONE

GENERAL
STRUCTURAL NOTES

SHEET	10
DWG	S1-G-10
DATE	JULY 2011
PROJ	171473.20.SP

Colorado Springs Utilities Project Number: SDS-002 CSU Work Order Number: 1146977

FILENAME: SP101nG10d_171473.dgn PLOT DATE: 6/8/2011 PLOT TIME: 1:58:19 PM

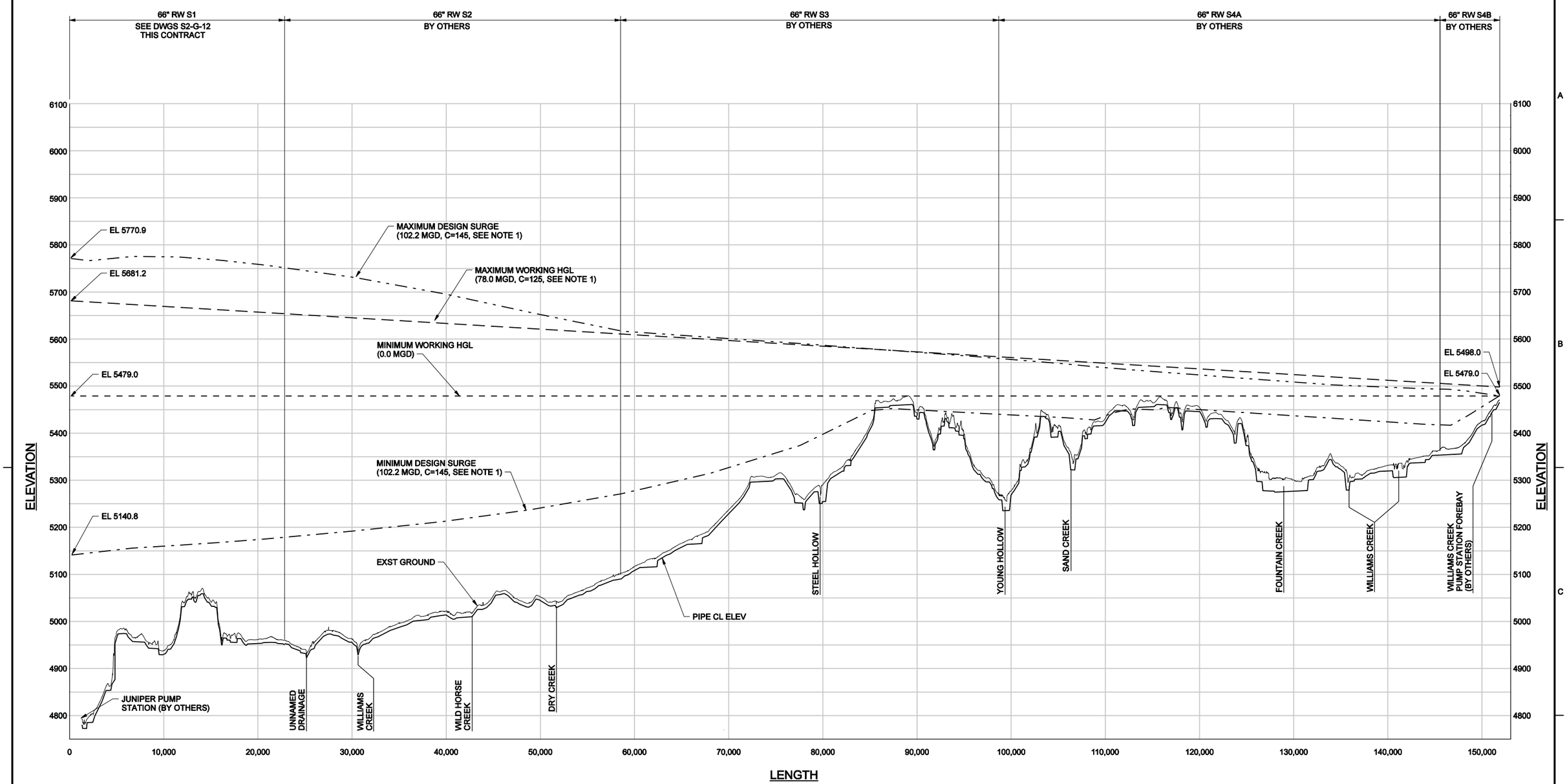

NOTES:

1. "C" REPRESENTS THE HAZEN-WILLIAMS ROUGHNESS COEFFICIENT.
2. 66" RW S3 AND S4A HYDRAULIC PROFILE ARE BASED ON SCHEMATIC DESIGN AND IS SUBJECT TO CHANGE AT FINAL DESIGN.
3. LENGTH AND 66" RW S1 STATIONING DO NOT CORRESPOND.

HYDRAULIC PROFILE- 66" RW SOUTH SECTION

NTS

COLORADO LICENSED
CODY L. HENRY
39310
6/30/11
PROFESSIONAL ENGINEER

DSGN	E FORD
DR	B NORVILLE
CHK	G SIMPSON
APVD	J HENRY

NO.	DATE	REVISION	BY	APVD

VERIFY SCALE
BAR IS ONE INCH ON ORIGINAL DRAWING.
0 1"
IF NOT ONE INCH ON THIS SHEET, ADJUST SCALES ACCORDINGLY.

CH2MHILL
Colorado Springs, CO 80903

SOUTHERN DELIVERY SYSTEM
RAW WATER PIPELINE
SOUTH SECTION ONE

GENERAL

SOUTH SECTION OVERALL
HYDRAULIC PROFILE

SHEET	11
DWG	S1-G-11
DATE	JULY 2011
PROJ	171473.20.SP

Colorado Springs Utilities Project Number: SDS-002 CSU Work Order Number: 1146977

FILENAME: SP101nG11d_171473.dgn PLOT DATE: 6/8/2011 PLOT TIME: 2:00:12 PM

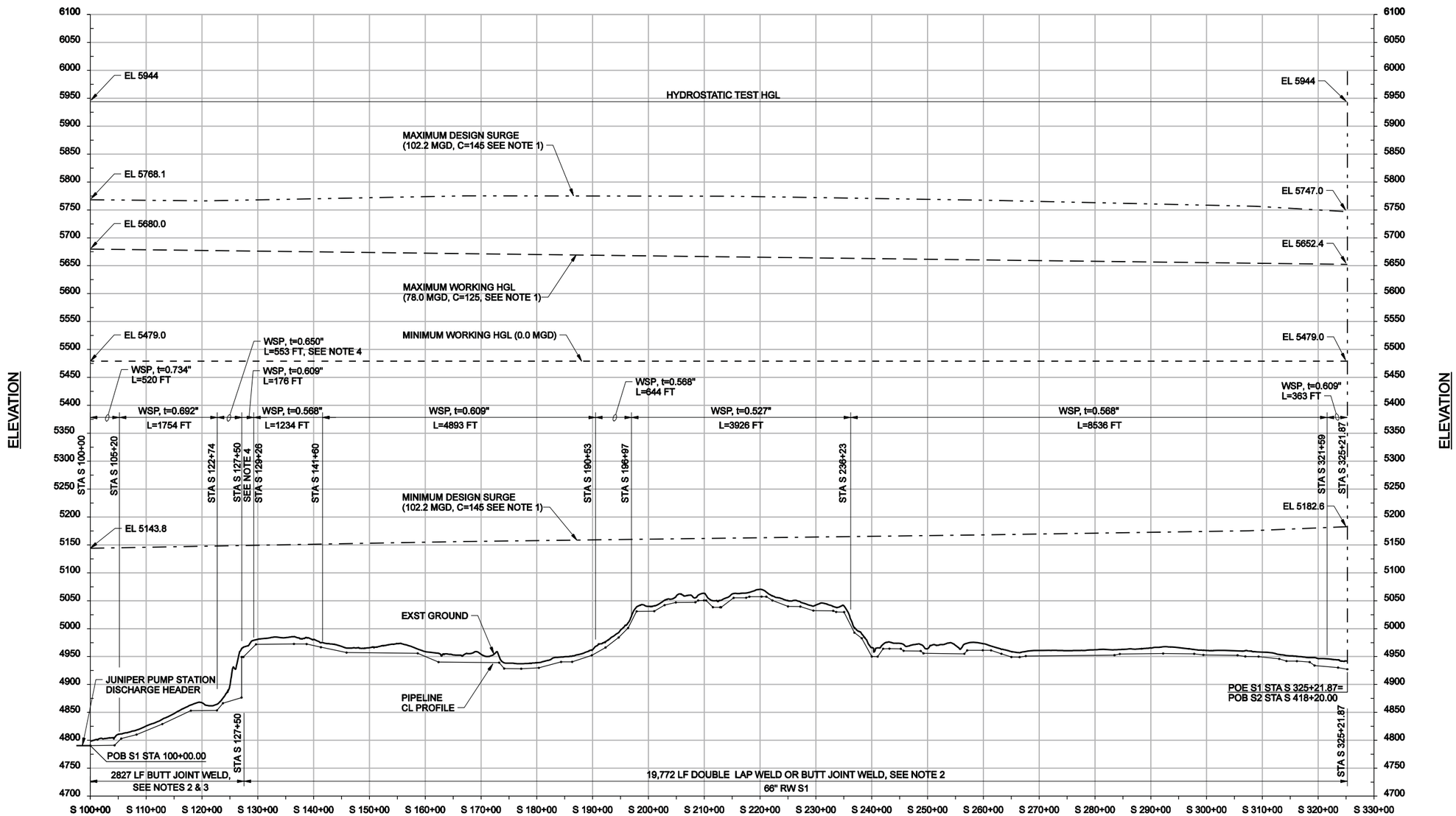

STATIONING

NOTES:

1. "C" REPRESENTS THE HAZEN-WILLIAMS ROUGHNESS COEFFICIENT.
2. SEE SPECIFICATION SECTION 33 05 01.02, WELDED STEEL PIPE & FITTINGS - WELD BEFORE BACKFILL, AND SPECIFICATION SECTION 09 81 12, PIPE JOINT COATING - WELD BEFORE BACKFILL.
3. BUTT JOINT WELD LENGTH INCLUDES JOINT WELDING IN THE RISER PIPE.
4. WSP LENGTH FOR RISER PIPE WALL THICKNESS OF 0.650" INCLUDES VERTICAL PIPELINE IN RISER PIPE.

HYDRAULIC PROFILE - 66" RW S1

HORZ: 1"=1000'
VERT: 1"=100'

COLORADO LICENSED PROFESSIONAL ENGINEER
JODY L. HENRY
39310
6/30/11

DSGN	E FORD
DR	B NORVILLE
CHK	G SIMPSON
APVD	J HENRY

NO.	DATE	REVISION	BY	APVD

VERIFY SCALE
BAR IS ONE INCH ON ORIGINAL DRAWING.
0 1"
IF NOT ONE INCH ON THIS SHEET, ADJUST SCALES ACCORDINGLY.

CH2MHILL
Colorado Springs, CO 80903

SOUTHERN DELIVERY SYSTEM
RAW WATER PIPELINE
SOUTH SECTION ONE

GENERAL

HYDRAULIC PROFILE AND
PIPE WALL THICKNESS

SHEET	12
DWG	S1-G-12
DATE	JULY 2011
PROJ	171473.20.SP

Colorado Springs Utilities Project Number: SDS-002 CSU Work Order Number: 1146977

FILENAME: SP101nG12d_171473.dgn PLOT DATE: 6/17/2011 PLOT TIME: 11:51:07 AM

UTILITY POTHOLE TABLE

POTHOLE ID	APPROXIMATE S1 PIPELINE STATION[1]	UTILITY DESCRIPTION	UTILITY SIZE (IN)	UTILITY MATERIAL	NORTHING	EASTING	GROUND ELEVATION AT POTHOLE (FT)	TOP OF PIPE ELEVATION (FT)	BOTTOM OF PIPE ELEVATION (FT)	MINIMUM VERTICAL CLEARANCE REQUIRED FOR CROSSING (IN)
PS1-1A-1	S 103+16	STATE PARK WATER[3]	12	ASBESTOS CEMENT	1162476.89	3223777.88	4804.67	NOT FOUND	NOT FOUND	12
PS1-1A-2	S 103+29	STATE PARK WATER[3]	12	ASBESTOS CEMENT	1162489.82	3223787.52	4804.81	NOT FOUND	NOT FOUND	12
PS1-1B	S 103+91	FVA WATER	42	PRESTRESSED WIRE WOUND CONCRETE	1162551.69	3223747.34	4806.18	4797.26	4793.76	N/A
PS1-1	S 106+68	FVA WATER	42	PRESTRESSED WIRE WOUND CONCRETE	1162819.64	3223769.47	4813.63	4800.96	4797.46	12
PS1-2	S 105+01	PUEBLO WEST WATER	36	DUCTILE IRON PIPE	1162661.77	3223622.47	4811.28	4801.86	4798.86	N/A
PS1-3	S 105+11	PUEBLO WEST WATER	24	DUCTILE IRON PIPE	1162672.05	3223600.16	4811.95	NOT FOUND	NOT FOUND	N/A
PS1-4-1	S 153+76	FVA WATER	42	PRESTRESSED WIRE WOUND CONCRETE	1165775.77	3225432.59	4971.33	NOT FOUND	NOT FOUND	12
PS1-4-2	S 153+80	FVA WATER	42	PRESTRESSED WIRE WOUND CONCRETE	1165771.98	3225435.52	4971.13	4966.13	4962.63	12
PS1-5	S 244+14	FVA WATER	42	PRESTRESSED WIRE WOUND CONCRETE	1170710.89	3230401.09	4975.40	NOT FOUND	NOT FOUND	N/A
PS1-7	S 268+30	FVA WATER	42	PRESTRESSED WIRE WOUND CONCRETE	1171737.26	3232250.07	4964.70	4958.45	4954.95	N/A
PS1-8	S 277+40	FVA WATER	42	PRESTRESSED WIRE WOUND CONCRETE	1172648.29	3232303.64	4964.00	4957.583333	4954.08	N/A
PS1-10	S 293+60	FVA WATER	42	PRESTRESSED WIRE WOUND CONCRETE	1174261.11	3232289.11	4972.35	NOT FOUND	NOT FOUND	N/A
PS1-11	S 303+25	FVA WATER	42	PRESTRESSED WIRE WOUND CONCRETE	1175229.51	3232279.55	4963.60	NOT FOUND	NOT FOUND	N/A
S2-1	S 307+77	FVA WATER	42	PRESTRESSED WIRE WOUND CONCRETE	1175667.20	3232274.29	4960.89	4954.888	4951.388	N/A
S2-1A	S 318+57	FVA WATER	42	PRESTRESSED WIRE WOUND CONCRETE	1176747.43	3232263.79	4950.64	4943.808667	4940.308667	N/A
S2-1B	S 323+77	FVA WATER	42	PRESTRESSED WIRE WOUND CONCRETE	1177264.05	3232259.50	4942.44	4936.194	4932.694	N/A
S2-1C	S 323+57	PUEBLO WEST WATER	6	ASBESTOS CEMENT	1177244.80	3232241.74	4943.20	4938.282333	4937.782333	18
S2-2	S 324+22	PUEBLO WEST WATER	8	ASBESTOS CEMENT	1177309.57	3232297.43	4942.10	4937.1	4936.433333	18
S2-3	S 324+20	PUEBLO WEST WATER	6	ASBESTOS CEMENT	1177308.87	3232293.80	4942.15	4937.15	4936.65	18
S2-4	S 324+57	FVA WATER	42	PRESTRESSED WIRE WOUND CONCRETE	1177346.14	3232258.09	4942.37	4934.955333	4931.455333	N/A
S2-4A	S 324+82	PUEBLO WEST WATER	8	ASBESTOS CEMENT	1177373.68	3232218.05	4942.92	4937.499333	4936.832667	18

NOTES:
1. STATIONING BASED ON MAY 2011 S1 STATIONING.
2. POTHOLE INFORMATION SHOWN REGARDLESS IF UTILITY WAS FOUND.
3. STATE PARK WATER COULD NOT BE FOUND AFTER SEVERAL POTHOLE ATTEMPTS. PIPELINE WILL BE SLIP-LINED IN NEAR FUTURE BY OTHERS. CH2M HILL WILL SURVEY PIPELINE WHEN IT IS EXPOSED FOR SLIP LINING AND PROVIDE SURVEY DATA TO CONTRACTOR.

NOTE: IN LAST COLUMN, "N/A" INDICATES THE POTHOLED UTILITY PARALLELS THE RW S1 PIPELINE IN THE VICINITY OF THE POTHOLE.

NOTES:

1. PER ASCE STANDARD CI/ASCE 38-02, LOCATE INFORMATION FOR EXISTING UTILITIES ARE CATEGORIZED WITH A QUALITY LEVEL BASE. THE FOLLOWING DEFINITIONS FROM CI/ASCE 38-02 ARE USED TO DESCRIBE EACH UTILITY QUALITY LEVEL.

   UTILITY QUALITY LEVEL:
   A PROFESSIONAL OPINION OF THE QUALITY AND RELIABILITY OF UTILITY INFORMATION. SUCH RELIABILITY IS DETERMINED BY THE MEANS AND METHODS OF THE PROFESSIONAL. EACH OF THE FOUR EXISTING UTILITY DATA QUALITY LEVELS IS ESTABLISHED BY DIFFERENT METHODS OF COLLECTION AND INTERPRETATION.

   QUALITY LEVEL A:
   PRECISE HORIZONTAL AND VERTICAL LOCATION OF UTILITIES OBTAINED BY THE ACTUAL EXPOSURE (OR VERIFICATION OF PREVIOUSLY EXPOSED AND SURVEYED UTILITIES) AND SUBSEQUENT MEASUREMENT OF SUBSURFACE UTILITIES, USUALLY AT A SPECIFIC POINT. MINIMALLY INTRUSIVE EXCAVATION EQUIPMENT IS TYPICALLY USED TO MINIMIZE THE POTENTIAL FOR UTILITY DAMAGE. A PRECISE HORIZONTAL AND VERTICAL LOCATION, AS WELL AS OTHER UTILITY ATTRIBUTES, IS SHOWN ON PLAN DOCUMENTS. ACCURACY IS TYPICALLY SET TO 0.5-INCH VERTICAL AND TO APPLICABLE HORIZONTAL SURVEY AND MAPPING ACCURACY AS DEFINED OR EXPECTED BY THE PROJECT MANAGER.

   QUALITY LEVEL B:
   INFORMATION OBTAINED THROUGH THE APPLICATION OF APPROPRIATE SURFACE GEOPHYSICAL METHODS TO DETERMINE THE EXISTENCE AND APPROXIMATE HORIZONTAL POSITION OF SUBSURFACE UTILITIES. QUALITY LEVEL B DATA SHOULD BE REPRODUCIBLE BY SURFACE GEOPHYSICS AT ANY POINT OF THEIR DEPICTION. THIS INFORMATION IS SURVEYED TO APPLICABLE TOLERANCES DEFINED BY THE PROJECT AND REDUCED ONTO PLAN DOCUMENTS.

   QUALITY LEVEL C:
   INFORMATION OBTAINED BY SURVEYING AND PLOTTING VISIBLE ABOVE-GROUND FEATURES AND BY USING PROFESSIONAL JUDGEMENT IN CORRELATING THIS INFORMATION TO QUALITY LEVEL D INFORMATION.

   QUALITY LEVEL D:
   INFORMATION DERIVED FROM EXISTING RECORDS OR ORAL RECOLLECTIONS.

2. UTILITIES SHOWN ON PLAN AND PROFILE SHEETS ARE QUALITY LEVEL"D" UNLESS OTHERWISE SHOWN.

3. QUALITY LEVEL A: POTHOLE
   INFORMATION IS SHOWN ON PLAN AND PROFILE SHEETS AS:
   ⊗PS1-1 AND IS TO BE USED WITH ASCE QUALITY LEVEL A DATA REFERENCE TABLE ON THIS SHEET.

4. QUALITY LEVEL B:
   DATA IS SHOWN AS:

   — — — G — — — — G — — — — G — — —

   GAS UTILITY SHOWN, OTHERS USE SIMILAR DESIGNATION.

5. QUALITY LEVEL C:
   DATA IS SHOWN AS:

   ——— G ——— G ——— G ——— G ——

   GAS UTILITY SHOWN, OTHERS USE SIMILAR DESIGNATION.

6. QUALITY LEVEL D:
   DATA IS SHOWN AS:

   - — - - — G — - - — - - — G — - - — - - — G — - - — -

   GAS UTILITY SHOWN, OTHERS USE SIMILAR DESIGNATION.

7. UTILITIES ARE BURIED UNLESS DESIGNATED OVERHEAD.

8. COORDINATE WITH UTILITY COMPANIES PRIOR TO CROSSING UTILITIES PER SPECIFICATION SECTION 01 31 13, PROJECT COORDINATION. UTILITY SUPPORT SYSTEMS TO BE USED PER REQUIREMENTS OF UTILITY COMPANIES.

9. COORDINATE WITH UTILITY COMPANIES TO PROTECT SERVICE LINES TO STRUCTURES BEING DEMOLISHED INCLUDING BUT NOT LIMITED TO, PUEBLO WEST METROPOLITAN DISTRICT, COLORADO NATURAL GAS, AND BLACK HILLS ENERGY.

10. CONFIRM LOCATION AND DEPTH OF UTILITIES PRIOR TO EXCAVATION.

11. CONTACT THE UTILITY NOTIFICATION CENTER OF COLORADO "CALL BEFORE YOU DIG" PROGRAM AT 1-800-922-1987 (OR 811) 72 BUSINESS HOURS PRIOR TO ANY EXCAVATION.

SANITARY SEWER MANHOLE DATA

APPROXIMATE STATION	LOCATION RELATIVE TO 66" RW S1/S2	PIPE DIA IN (IN)	PIPE DIA OUT (IN)	NORTHING	EASTING	RIM ELEVATION	INVERT ELEV IN	INVERT ELEV OUT
S1 S 319+45	EAST	18	18	1176836.67	3232322.77	4948.5	4936.71	4938.56
S1 S 319+45	WEST	18	18	NA	NA	4955.29	4945.59	4945.44
S2 S 424+00	EAST	15	15	1177993.61	3232321.71	4934.36	4928.26	4928.11
S2 S 424+60	WEST	15	15	1178057.94	3232139.35	4936.72	4930.12	4929.92

COLORADO LICENSED PROFESSIONAL ENGINEER CODY L. HENRY 39310 6/30/11

DSGN	E FORD					
DR	B NORVILLE					
CHK	G SIMPSON					
APVD	J HENRY	NO.	DATE	REVISION	BY	APVD

VERIFY SCALE
BAR IS ONE INCH ON ORIGINAL DRAWING.
0 1"
IF NOT ONE INCH ON THIS SHEET, ADJUST SCALES ACCORDINGLY.

CH2MHILL
Colorado Springs, CO 80903

SOUTHERN DELIVERY SYSTEM
RAW WATER PIPELINE
SOUTH SECTION ONE

GENERAL

UTILITY INFORMATION LOCATION TABLE

SHEET	13
DWG	S1-G-13
DATE	JULY 2011
PROJ	171473.20.SP

Colorado Springs Utilities Project Number: SDS-002 CSU Work Order Number: 1146977

FILENAME: SP101nG13d_171473.dgn PLOT DATE: 6/29/2011 PLOT TIME: 7:46:15 AM

WORK LIMIT CONSTRUCTION FENCING SCHEDULE

WORK LIMIT CONSTRUCTION FENCING SCHEDULE			
LOCATION	EAST FENCE LINE FENCE TYPE STD DETAIL NUMBER	WEST FENCE LINE FENCE TYPE STD DETAIL NUMBER	DWG REFERENCE
ACCESS TO SOUTH FVA BLOWOFF			
PARCEL #600000058 TO POB	3231-666	3231-666	S1-G-7
POB TO E SPAULDING AVE			
POB TO PARCEL #625000004	3231-666	3231-666	S1-PP-1, S1-PP-2, S1-PP-3
PARCEL #625001001 TO PARCEL #625002001	3231-666, 3231-451	3231-666, 3231-451	S1-PP-3, S1-PP-4, S1-PP-5
PARCEL #625002001 (STAGING AREA)	3231-410	3231-410	S1-PP-4
PARCEL #500000069 TO PARCEL #500000024	3231-666	3231-666	S1-PP-5, S1-PP-6, S1-PP-7, S1-PP-8, S1-PP-9, S1-PP-10, S1-PP-11
PARCEL #500000024 (STAGING AREA)	3231-410	3231-410	S1-PP-10
PARCEL #500000025 TO PARCEL #517003002	3231-666	3231-666	S1-PP-11, S1-PP-12, S1-PP-13, S1-PP-14, S1-PP-15, S1-PP-16, S1-PP-17
PARCEL #517003001 TO PARCEL #517099366	3231-410	3231-666	S1-PP-17
PARCEL #517099366 (STAGING AREA)	3231-410	3231-410	S1-PP-17
PARCEL #508015001	3231-666	3231-666	S1-PP-17, S1 PP-18
E SPAULDING AVE TO POE			
E SPAULDING AVE TO GROUSE DR	3231-666	3231-666	S1-PP-18
NOTES:			
1. LOCATION DESCRIPTIONS ARE CONSTRUCTION WORK LIMITS UNLESS NOTED OTHERWISE.			
2. DO NOT INSTALL WORK LIMIT FENCING ACROSS PUBLIC ROADS.			
3. ENCLOSE ENTIRE STAGING AREAS WITH CHAIN LINK FENCE. SECURE STAGING AREAS WITH A LOCKED GATE.			

NOTES:

1. AT TURN AROUND AREA AT POB, INSTALL AND ENCLOSE ENTIRE AREA WITH ORANGE SAFETY FENCE, SEE DWG S1-PP-1 AND 3231-666.
2. AT TURN AROUND AREA AT POE INSTALL AND ENCLOSE ENTIRE AREA WITH ORANGE SAFETY FENCE, SEE DWG S1-PP-18 AND 3231-666.
3. DO NOT INSTALL WORK LIMIT FENCING ACROSS ROAD BETWEEN RIGHT-OF-WAY.
4. INSTALL WORK LIMIT FENCING 3231-666 OR 3231-410 PARALLEL TO EACH SIDE OF THE ROAD RIGHT OF WAY IN THE EAST WEST DIRECTION.
5. ENCLOSE ENTIRE STAGING AREA WITH CHAIN LINK FENCE 3231-410 . SECURE STAGING AREAS WITH A LOCKED GATE. SEE DWGS S1-PP-1, S1-PP-4, S1-PP-10, S1-PP-17, AND S1-PP-18.
6. SEE DWGS S1-EC-1 THROUGH S1-EC-11 FOR WORK LIMIT FENCING BOUNDARY.
7. PROVIDE OPENINGS FOR WILDLIFE CROSSING IN THE WORK LIMIT FENCING AT A MAXIMUM OF 1/4 MILE INTERVALS, AND AT WELL DEFINED GAME TRAILS AS SHOWN ON THE ENVIRONMENTAL CONSTRAINTS MAP IN THE BIDDERS LIBRARY.

CATHODIC PROTECTION TEST STATION SCHEDULE

CATHODIC PROTECTION TEST STATION SCHEDULE			
P&P SHEET	APPROXIMATE PIPELINE STA	LOCATE TEST STATION NEXT TO:	DETAIL
PP-1	100+20	ACCESS MANWAY	2642-837A
PP-1	106+65	FVA CROSSING	2642-806A
PP-3	124+00	START OF UPRR TUNNEL	2642-811A
PP-3	127+15	ACCESS MANWAY	2642-837A
PP-4	136+37	CARV	2642-801A
PP-5	150+00		2642-802A
PP-5	153+86	FVA CROSSING	2642-806A
PP-6	164+20		2642-802A
PP-7	177+30	BLOWOFF	2642-802A
PP-8	198+07	ACCESS MANWAY	2642-802A
PP-9	209+85	CARV	2642-801A
PP-10	220+16	CARV	2642-802A
PP-11	234+85	ACCESS MANWAY	2642-802A
PP-12	243+08	CARV	2642-802A
PP-13	256+50	BLOWOFF	2642-802A
PP-14	266+00	BLOWOFF	2642-802A
PP-14	279+00		2642-802A
PP-15	292+12	CARV	2642-801A
PP-16	307+20		2642-802A
PP-18	325+22	POE OF S1	2642-837A

NOTES:

1. INSTALL ANODES PER SPECIFICATION SECTION 26 42 02, GALVANIC ANODE CATHODIC PROTECTION SYSTEM.

FIBER OPTICS CONDUIT LENGTHS

APPROXIMATE PIPELINE STATION	LENGTH BETWEEN HANDHOLES
S 100+00	
TO	1801
S 118+01	
TO	467
S 122+68	
TO	92
S 123+60	
TO	37
S 123+97	
TO	318
S 127+15	
TO	1159
S 138+74	
TO	716
S 145+90	
TO	1660
S 162+50	
TO	2500
S 187+50	
TO	958
S 197+08	
TO	2647
S 223+55	
TO	597
S 229+52	
TO	994
S 239+46	
TO	954
S 249+00	
TO	1533
S 264+33	
TO	70
S 265+03	
TO	147
S 266+50	
TO	2500
S 291+50	
TO	1480
S 306+30	
TO	64
S 306+94	
TO	1271
S 319+65	

FIBER OPTIC CONDUIT LENGTHS AT ROAD,UTILITY, AND DRAINAGE CROSSINGS

APPROXIMATE PIPELINE STATION	APPROXIMATE LENGTH	LOCATION
S 101+50	60	JUNIPER RD
TO		
S 102+10		
S 103+70	100	DRAINAGE
TO		
S 104+70		
S 106+15	165	DRAINAGE / UTILITY CORRIDOR
TO		
S 107+80		
S 137+20	220	DRAINAGE
TO		
S 139+40		
S 147+50	450	DRAINAGE
TO		
S 152+00		
S 153+50	100	UTILITY CORRIDOR
TO		
S 154+50		
S 162+00	160	DRAINAGE
TO		
S 163+60		
S 175+30	750	DRAINAGE
TO		
S 182+80		
S 187+30	570	DRAINAGE
TO		
S 193+00		
S 200+00	105	DRAINAGE
TO		
S 201+05		
S 212+00	100	DRAINAGE
TO		
S 213+00		
S 239+80	155	DRAINAGE
TO		
S 241+35		
S 249+26	125	DRAINAGE
TO		
S 250+51		

APPROXIMATE PIPELINE STATION	APPROXIMATE LENGTH	LOCATION
S 255+50	70	DRAINAGE
TO		
S 256+20		
S 257+21	191	PROPOSED JOE MARTINEZ BLVD EXTENSION
TO		
S 259+12		
S 266+00	100	DRAINAGE
TO		
S 267+00		
S 282+50	100	DRAINAGE
TO		
S 283+50		
S 300+00	100	DRAINAGE
TO		
S 301+00		
S 307+00	82	UTILITY CORRIDOR
TO		
S 307+82		
S 314+32	30	UTILITY CORRIDOR
TO		
S 314+62		
S 318+97	205	UTILITY CORRIDOR
TO		
S 321+02		
S 323+50	150	E SPAULDING AVE
TO		
S 325+00		

NOTES:

1. MAINTAIN A MINIMUM BEND RADIUS OF 10 TIMES THE DIAMETER OF THE FIBER OPTIC CONDUIT.
2. BETWEEN THE STATIONS SHOWN, MATCH THE DEPTH OF THE FO CONDUIT TO THE COVER OF THE 66" RW.

COLORADO LICENSED PROFESSIONAL ENGINEER GODY L. HENRY 39310 6/30/11

DSGN	E FORD					
DR	B NORVILLE					
CHK	G SIMPSON					
APVD	J HENRY	NO.	DATE	REVISION	BY	APVD

VERIFY SCALE
BAR IS ONE INCH ON ORIGINAL DRAWING.
0 1"
IF NOT ONE INCH ON THIS SHEET, ADJUST SCALES ACCORDINGLY.

CH2MHILL
Colorado Springs, CO 80903

SOUTHERN DELIVERY SYSTEM
RAW WATER PIPELINE
SOUTH SECTION ONE

GENERAL
CONSTRUCTION FENCING SCHEDULE, TEST STATION SCHEDULE, AND FIBER OPTIC INFORMATION TABLES

SHEET	14
DWG	S1-G-14
DATE	JULY 2011
PROJ	171473.20.SP

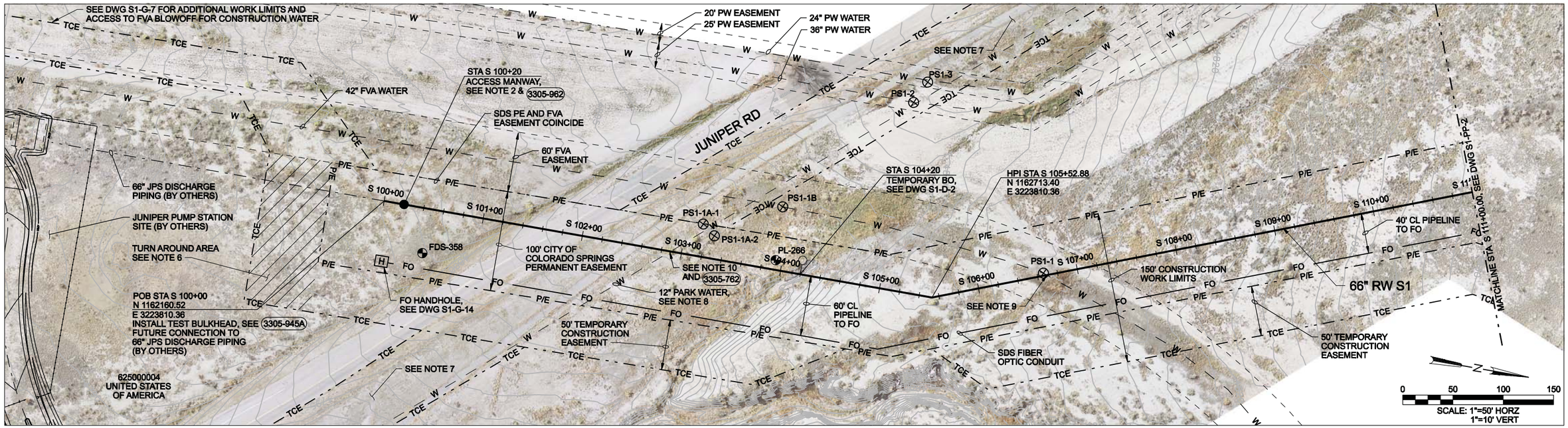

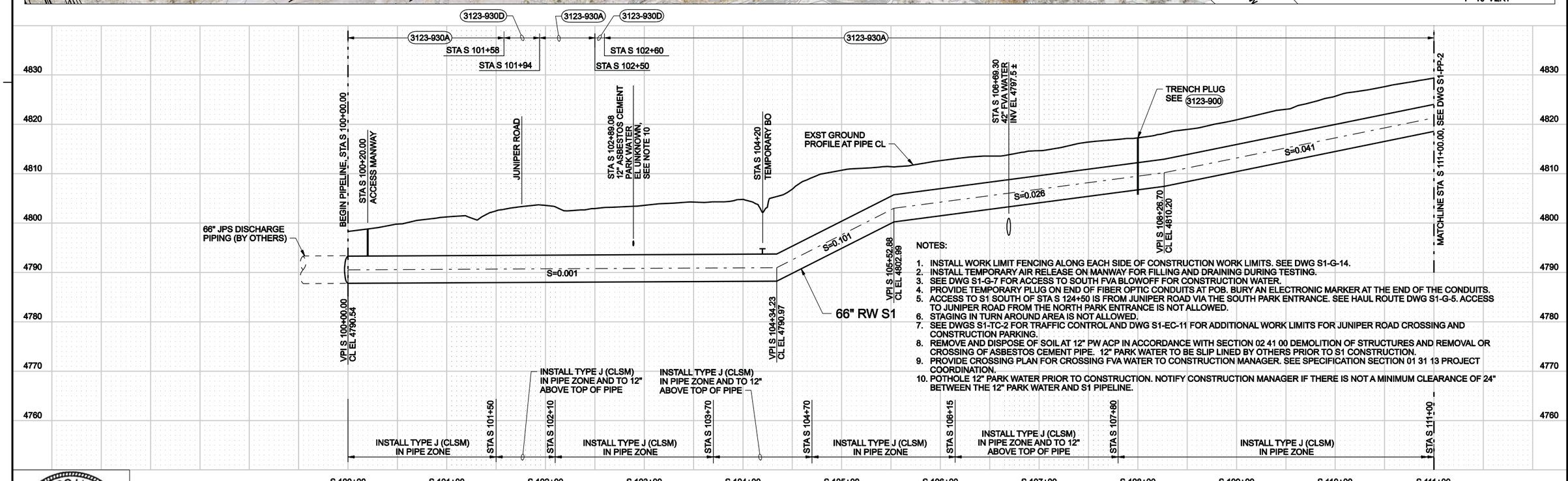

NOTES:

1. INSTALL WORK LIMIT FENCING ALONG EACH SIDE OF CONSTRUCTION WORK LIMITS. SEE DWG S1-G-14.
2. INSTALL TEMPORARY AIR RELEASE ON MANWAY FOR FILLING AND DRAINING DURING TESTING.
3. SEE DWG S1-G-7 FOR ACCESS TO SOUTH FVA BLOWOFF FOR CONSTRUCTION WATER.
4. PROVIDE TEMPORARY PLUG ON END OF FIBER OPTIC CONDUITS AT POB. BURY AN ELECTRONIC MARKER AT THE END OF THE CONDUITS.
5. ACCESS TO S1 SOUTH OF STA S 124+50 IS FROM JUNIPER ROAD VIA THE SOUTH PARK ENTRANCE. SEE HAUL ROUTE DWG S1-G-5. ACCESS TO JUNIPER ROAD FROM THE NORTH PARK ENTRANCE IS NOT ALLOWED.
6. STAGING IN TURN AROUND AREA IS NOT ALLOWED.
7. SEE DWGS S1-TC-2 FOR TRAFFIC CONTROL AND DWG S1-EC-11 FOR ADDITIONAL WORK LIMITS FOR JUNIPER ROAD CROSSING AND CONSTRUCTION PARKING.
8. REMOVE AND DISPOSE OF SOIL AT 12" PW ACP IN ACCORDANCE WITH SECTION 02 41 00 DEMOLITION OF STRUCTURES AND REMOVAL OR CROSSING OF ASBESTOS CEMENT PIPE. 12" PARK WATER TO BE SLIP LINED BY OTHERS PRIOR TO S1 CONSTRUCTION.
9. PROVIDE CROSSING PLAN FOR CROSSING FVA WATER TO CONSTRUCTION MANAGER. SEE SPECIFICATION SECTION 01 31 13 PROJECT COORDINATION.
10. POTHOLE 12" PARK WATER PRIOR TO CONSTRUCTION. NOTIFY CONSTRUCTION MANAGER IF THERE IS NOT A MINIMUM CLEARANCE OF 24" BETWEEN THE 12" PARK WATER AND S1 PIPELINE.

COLORADO LICENSED
CODY L. HENRY
39310
6/30/11
PROFESSIONAL ENGINEER

DSGN	E FORD				
DR	B NORVILLE				
CHK	G SIMPSON				
APVD	J HENRY	NO.	DATE	REVISION	BY	APVD

VERIFY SCALE
BAR IS ONE INCH ON ORIGINAL DRAWING.
0 1"
IF NOT ONE INCH ON THIS SHEET, ADJUST SCALES ACCORDINGLY.

CH2MHILL
Colorado Springs, CO 80903

SOUTHERN DELIVERY SYSTEM
RAW WATER PIPELINE
SOUTH SECTION ONE

PLAN AND PROFILE

POB STATION S 100+00 TO STATION S 111+00

SHEET	15
DWG	S1-PP-1
DATE	JULY 2011
PROJ	171473.20.SP

Colorado Springs Utilities Project Number: SDS-002 CSU Work Order Number: 1146977

FILENAME: SP105nP01d_171473.dgn PLOT DATE: 6/29/2011 PLOT TIME: 6:54:29 AM

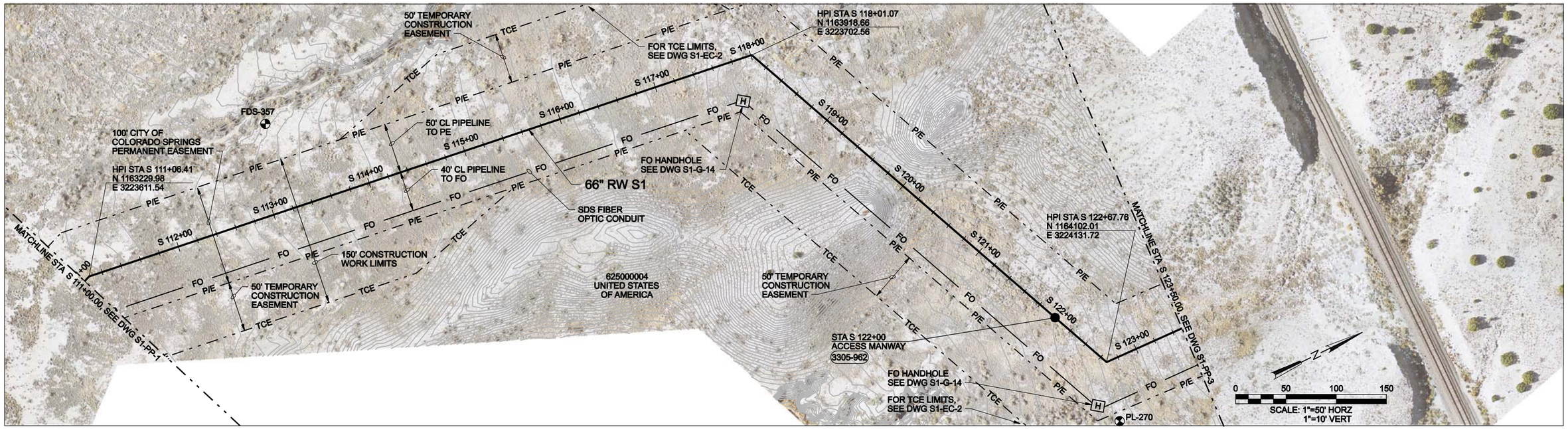

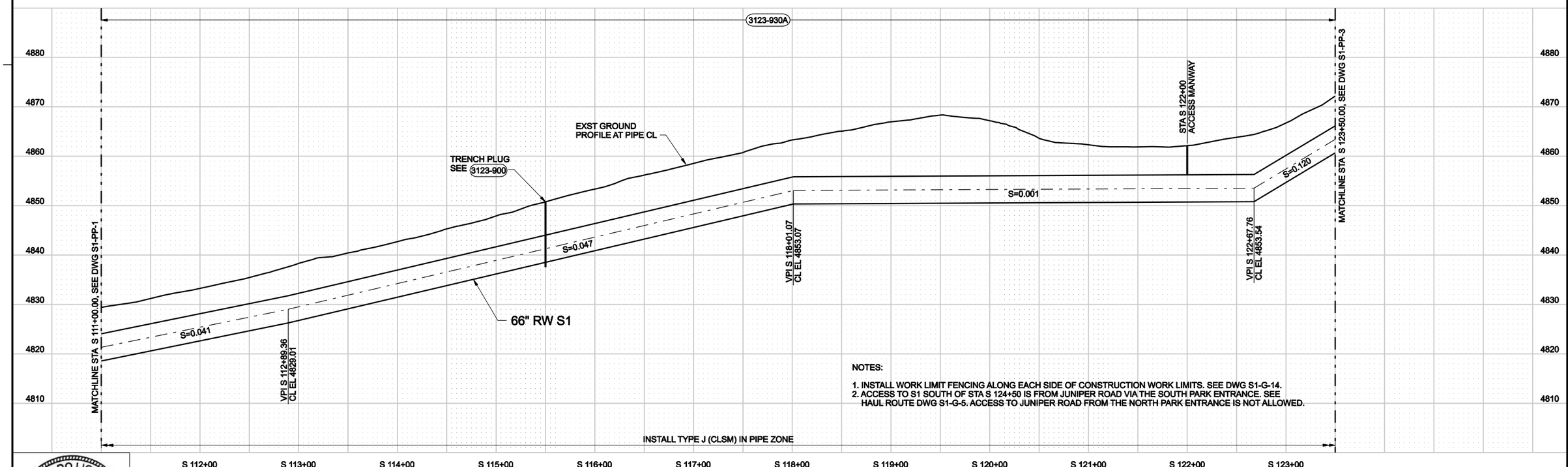

NOTES:

1. INSTALL WORK LIMIT FENCING ALONG EACH SIDE OF CONSTRUCTION WORK LIMITS. SEE DWG S1-G-14.
2. ACCESS TO S1 SOUTH OF STA S 124+50 IS FROM JUNIPER ROAD VIA THE SOUTH PARK ENTRANCE. SEE HAUL ROUTE DWG S1-G-5. ACCESS TO JUNIPER ROAD FROM THE NORTH PARK ENTRANCE IS NOT ALLOWED.

COLORADO LICENSED PROFESSIONAL ENGINEER JODY L. HENRY 39310 6/30/11

DSGN	E FORD
DR	B NORVILLE
CHK	G SIMPSON
APVD	J HENRY

NO.	DATE	REVISION	BY	APVD

VERIFY SCALE
BAR IS ONE INCH ON ORIGINAL DRAWING.
0 1"
IF NOT ONE INCH ON THIS SHEET, ADJUST SCALES ACCORDINGLY.

CH2MHILL
Colorado Springs, CO 80903

SOUTHERN DELIVERY SYSTEM
RAW WATER PIPELINE
SOUTH SECTION ONE

PLAN AND PROFILE

STATION S 111+00 TO STATION S 123+50

SHEET	16
DWG	S1-PP-2
DATE	JULY 2011
PROJ	171473.20.SP

Colorado Springs Utilities Project Number: SDS-002 CSU Work Order Number: 1146977

FILENAME: SP105nP02d_171473.dgn PLOT DATE: 6/9/2011 PLOT TIME: 8:03:01 AM

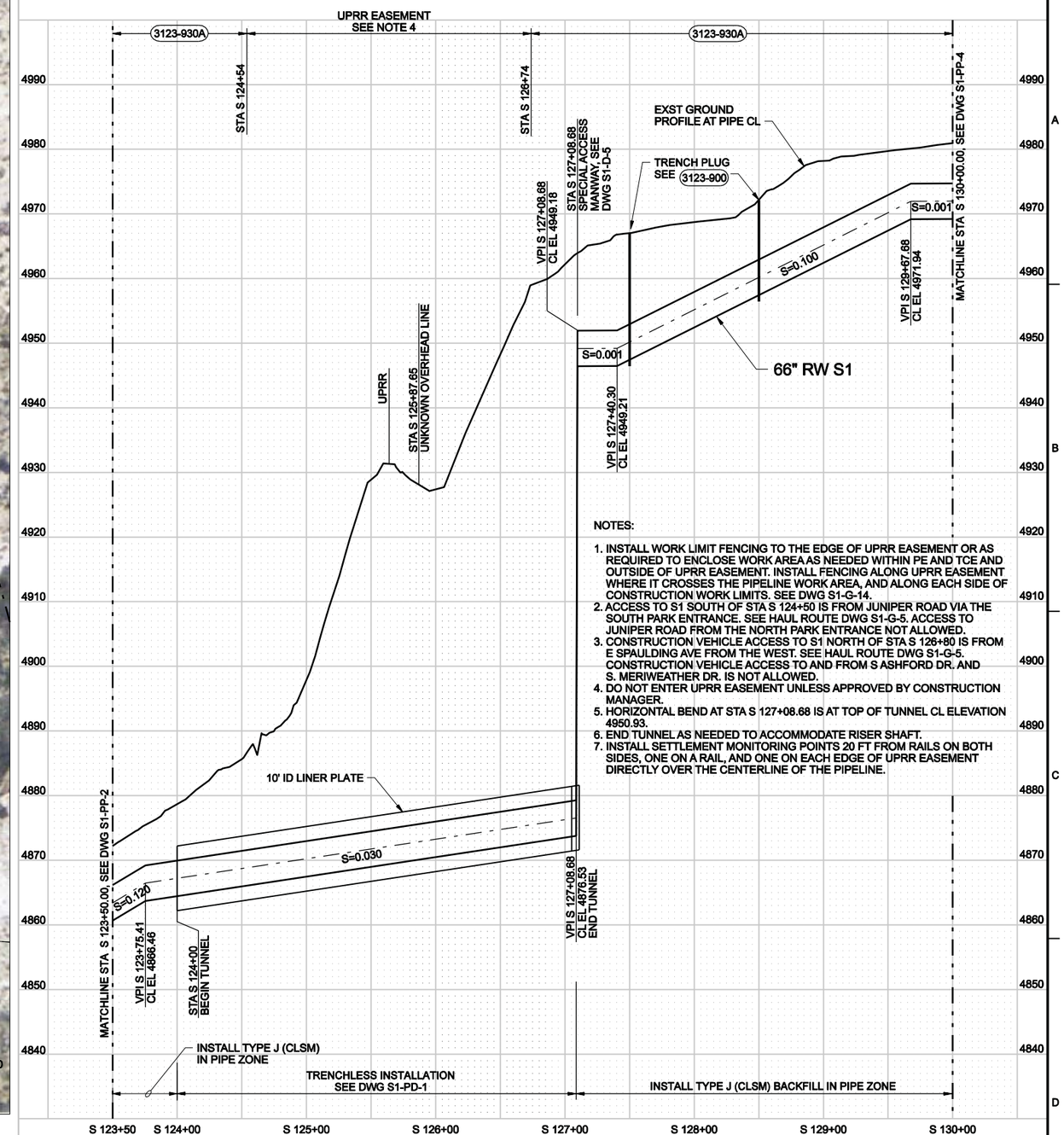

NOTES:

1. INSTALL WORK LIMIT FENCING TO THE EDGE OF UPRR EASEMENT OR AS REQUIRED TO ENCLOSE WORK AREA AS NEEDED WITHIN PE AND TCE AND OUTSIDE OF UPRR EASEMENT. INSTALL FENCING ALONG UPRR EASEMENT WHERE IT CROSSES THE PIPELINE WORK AREA, AND ALONG EACH SIDE OF CONSTRUCTION WORK LIMITS. SEE DWG S1-G-14.
2. ACCESS TO S1 SOUTH OF STA S 124+50 IS FROM JUNIPER ROAD VIA THE SOUTH PARK ENTRANCE. SEE HAUL ROUTE DWG S1-G-5. ACCESS TO JUNIPER ROAD FROM THE NORTH PARK ENTRANCE NOT ALLOWED.
3. CONSTRUCTION VEHICLE ACCESS TO S1 NORTH OF STA S 126+80 IS FROM E SPAULDING AVE FROM THE WEST. SEE HAUL ROUTE DWG S1-G-5. CONSTRUCTION VEHICLE ACCESS TO AND FROM S ASHFORD DR. AND S. MERIWEATHER DR. IS NOT ALLOWED.
4. DO NOT ENTER UPRR EASEMENT UNLESS APPROVED BY CONSTRUCTION MANAGER.
5. HORIZONTAL BEND AT STA S 127+08.68 IS AT TOP OF TUNNEL CL ELEVATION 4950.93.
6. END TUNNEL AS NEEDED TO ACCOMMODATE RISER SHAFT.
7. INSTALL SETTLEMENT MONITORING POINTS 20 FT FROM RAILS ON BOTH SIDES, ONE ON A RAIL, AND ONE ON EACH EDGE OF UPRR EASEMENT DIRECTLY OVER THE CENTERLINE OF THE PIPELINE.

COLORADO LICENSED
CODY L. HENRY
89310
6/30/11
PROFESSIONAL ENGINEER

DSGN	E FORD / A FINNEY
DR	B NORVILLE
CHK	G SIMPSON
APVD	J HENRY

NO.	DATE	REVISION	BY	APVD

VERIFY SCALE
BAR IS ONE INCH ON ORIGINAL DRAWING.
0 1"
IF NOT ONE INCH ON THIS SHEET, ADJUST SCALES ACCORDINGLY.

CH2MHILL
Colorado Springs, CO 80903

SOUTHERN DELIVERY SYSTEM
RAW WATER PIPELINE
SOUTH SECTION ONE

PLAN AND PROFILE

STATION S 123+50 TO STATION S 130+00

SHEET	17
DWG	S1-PP-3
DATE	JULY 2011
PROJ	171473.20.SP

Colorado Springs Utilities Project Number: SDS-002 CSU Work Order Number: 1146977

FILENAME: SP105nP03d_171473.dgn PLOT DATE: 6/27/2011 PLOT TIME: 1:01:59 PM

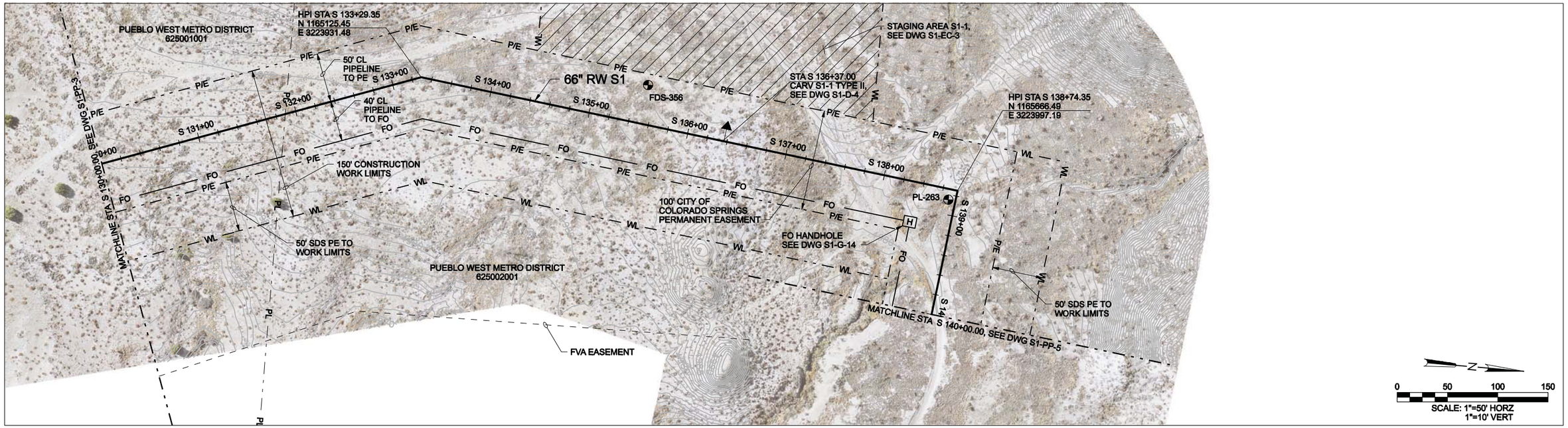

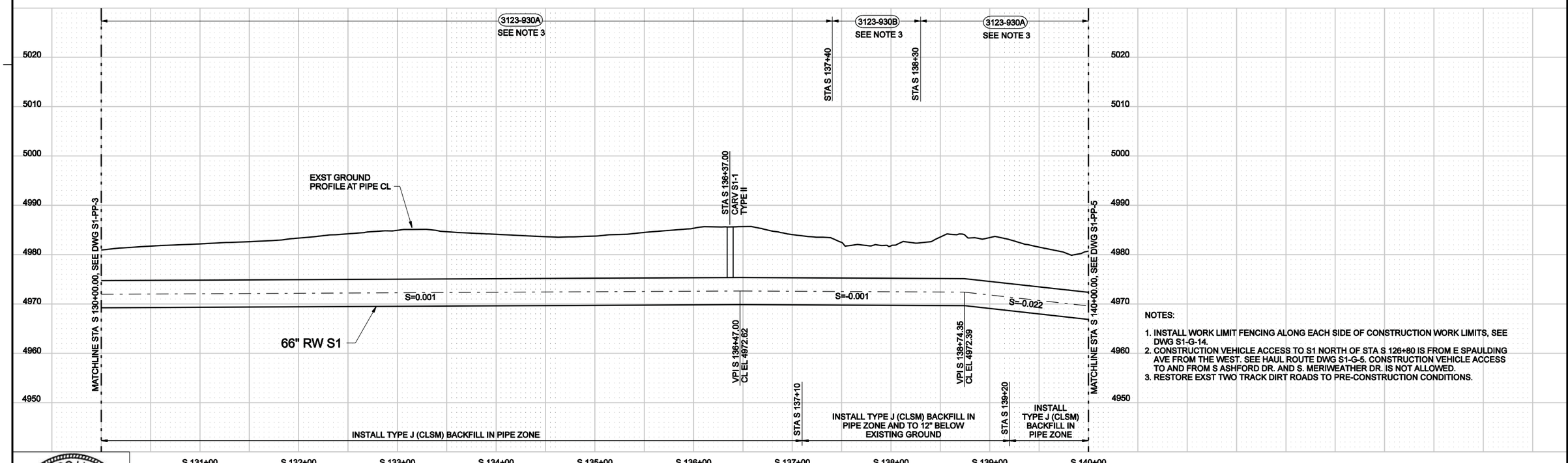

NOTES:

1. INSTALL WORK LIMIT FENCING ALONG EACH SIDE OF CONSTRUCTION WORK LIMITS, SEE DWG S1-G-14.
2. CONSTRUCTION VEHICLE ACCESS TO S1 NORTH OF STA S 126+80 IS FROM E SPAULDING AVE FROM THE WEST. SEE HAUL ROUTE DWG S1-G-5. CONSTRUCTION VEHICLE ACCESS TO AND FROM S ASHFORD DR. AND S. MERIWEATHER DR. IS NOT ALLOWED.
3. RESTORE EXST TWO TRACK DIRT ROADS TO PRE-CONSTRUCTION CONDITIONS.

COLORADO LICENSED
GODY L. HENRY
39310
6/30/11
PROFESSIONAL ENGINEER

DSGN	E FORD
DR	B NORVILLE
CHK	G SIMPSON
APVD	J HENRY

NO.	DATE	REVISION	BY	APVD

VERIFY SCALE
BAR IS ONE INCH ON ORIGINAL DRAWING.
0 1"
IF NOT ONE INCH ON THIS SHEET, ADJUST SCALES ACCORDINGLY.

CH2MHILL
Colorado Springs, CO 80903

SOUTHERN DELIVERY SYSTEM
RAW WATER PIPELINE
SOUTH SECTION ONE

PLAN AND PROFILE

STATION S 130+00 TO STATION S 140+00

SHEET	18
DWG	S1-PP-4
DATE	JULY 2011
PROJ	171473.20.SP

Colorado Springs Utilities Project Number: SDS-002 CSU Work Order Number: 1146977

FILENAME: SP105nP04d_171473.dgn PLOT DATE: 6/9/2011 PLOT TIME: 9:08:18 AM

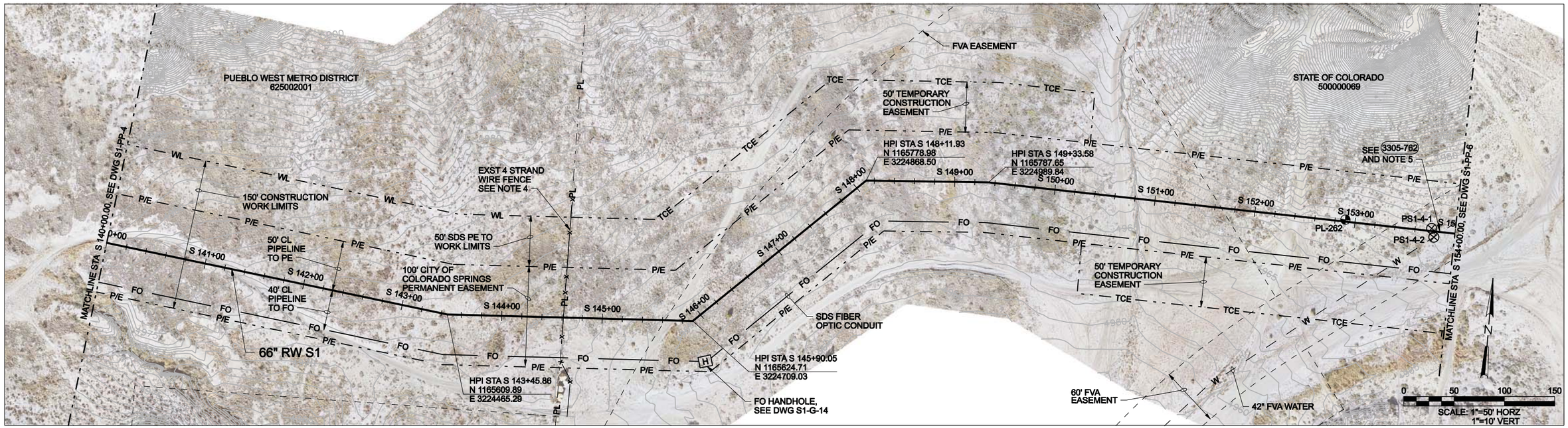

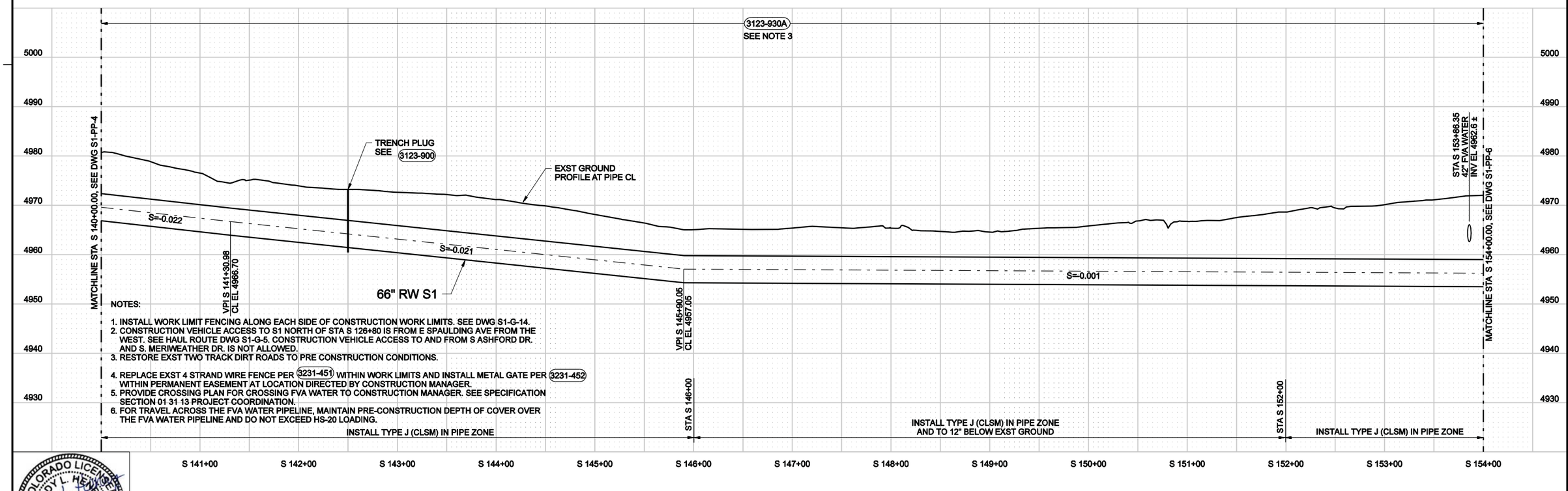

NOTES:

1. INSTALL WORK LIMIT FENCING ALONG EACH SIDE OF CONSTRUCTION WORK LIMITS. SEE DWG S1-G-14.
2. CONSTRUCTION VEHICLE ACCESS TO S1 NORTH OF STA S 126+80 IS FROM E SPAULDING AVE FROM THE WEST. SEE HAUL ROUTE DWG S1-G-5. CONSTRUCTION VEHICLE ACCESS TO AND FROM S ASHFORD DR. AND S. MERIWEATHER DR. IS NOT ALLOWED.
3. RESTORE EXST TWO TRACK DIRT ROADS TO PRE CONSTRUCTION CONDITIONS.
4. REPLACE EXST 4 STRAND WIRE FENCE PER 3231-451 WITHIN WORK LIMITS AND INSTALL METAL GATE PER 3231-452 WITHIN PERMANENT EASEMENT AT LOCATION DIRECTED BY CONSTRUCTION MANAGER.
5. PROVIDE CROSSING PLAN FOR CROSSING FVA WATER TO CONSTRUCTION MANAGER. SEE SPECIFICATION SECTION 01 31 13 PROJECT COORDINATION.
6. FOR TRAVEL ACROSS THE FVA WATER PIPELINE, MAINTAIN PRE-CONSTRUCTION DEPTH OF COVER OVER THE FVA WATER PIPELINE AND DO NOT EXCEED HS-20 LOADING.

COLORADO LICENSED PROFESSIONAL ENGINEER
GLODY L. HENRY
39310
6/30/11

DSGN	E FORD
DR	B NORVILLE
CHK	G SIMPSON
APVD	J HENRY

NO.	DATE	REVISION	BY	APVD

VERIFY SCALE
BAR IS ONE INCH ON ORIGINAL DRAWING.
0 1"
IF NOT ONE INCH ON THIS SHEET, ADJUST SCALES ACCORDINGLY.

CH2MHILL
Colorado Springs, CO 80903

SOUTHERN DELIVERY SYSTEM
RAW WATER PIPELINE
SOUTH SECTION ONE

PLAN AND PROFILE
STATION S 140+00 TO STATION S 154+00

SHEET	19
DWG	S1-PP-5
DATE	JULY 2011
PROJ	171473.20.SP

Colorado Springs Utilities Project Number: SDS-002 CSU Work Order Number: 1146977

FILENAME: SP105nP05d_171473.dgn PLOT DATE: 6/18/2011 PLOT TIME: 9:58:57 AM

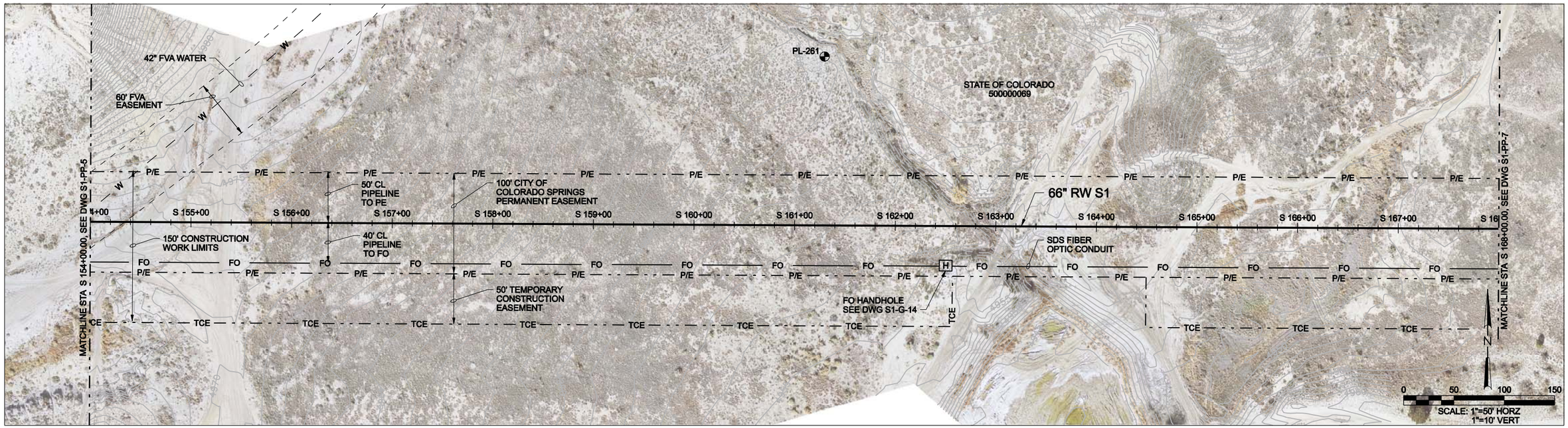

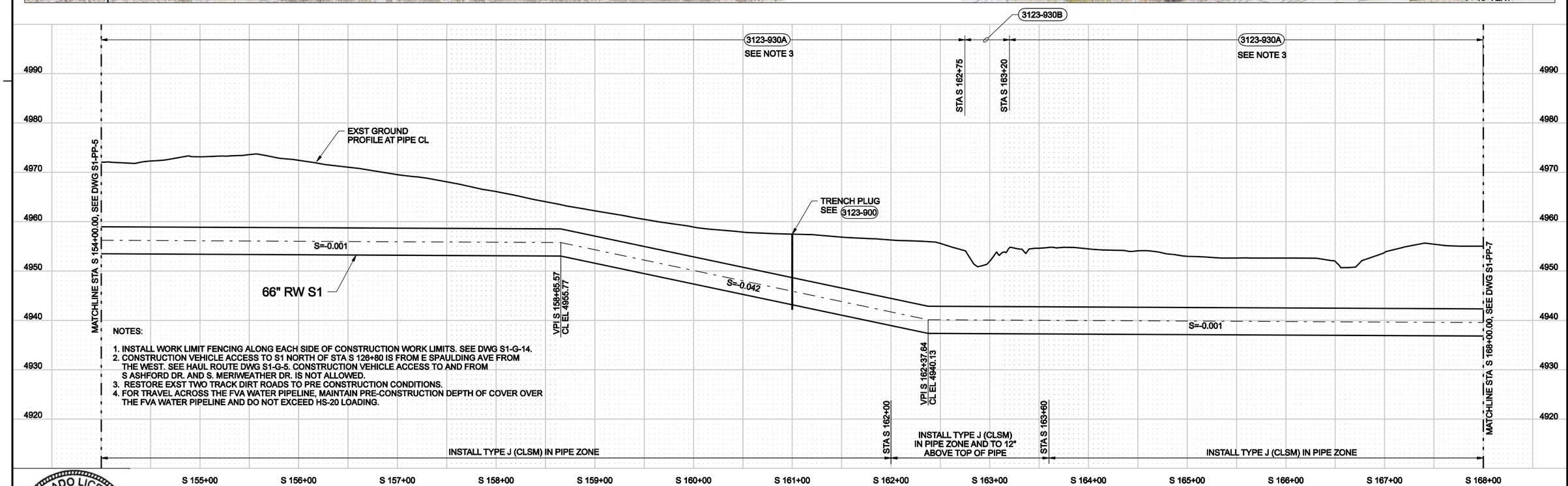

NOTES:

1. INSTALL WORK LIMIT FENCING ALONG EACH SIDE OF CONSTRUCTION WORK LIMITS. SEE DWG S1-G-14.
2. CONSTRUCTION VEHICLE ACCESS TO S1 NORTH OF STA S 126+80 IS FROM E SPAULDING AVE FROM THE WEST. SEE HAUL ROUTE DWG S1-G-5. CONSTRUCTION VEHICLE ACCESS TO AND FROM S ASHFORD DR. AND S. MERIWEATHER DR. IS NOT ALLOWED.
3. RESTORE EXST TWO TRACK DIRT ROADS TO PRE CONSTRUCTION CONDITIONS.
4. FOR TRAVEL ACROSS THE FVA WATER PIPELINE, MAINTAIN PRE-CONSTRUCTION DEPTH OF COVER OVER THE FVA WATER PIPELINE AND DO NOT EXCEED HS-20 LOADING.

COLORADO LICENSED
CODY L. HENRY
39310
6/30/11
PROFESSIONAL ENGINEER

DSGN	E FORD				
DR	B NORVILLE				
CHK	G SIMPSON				
APVD	J HENRY	NO.	DATE	REVISION	BY	APVD

VERIFY SCALE
BAR IS ONE INCH ON ORIGINAL DRAWING.
0 1"
IF NOT ONE INCH ON THIS SHEET, ADJUST SCALES ACCORDINGLY.

CH2MHILL
Colorado Springs, CO 80903

SOUTHERN DELIVERY SYSTEM
RAW WATER PIPELINE
SOUTH SECTION ONE

PLAN AND PROFILE

STATION S 154+00 TO STATION S 168+00

SHEET	20
DWG	S1-PP-6
DATE	JULY 2011
PROJ	171473.20.SP

Colorado Springs Utilities Project Number: SDS-002 CSU Work Order Number: 1146977

FILENAME: SP105nP06d_171473.dgn PLOT DATE: 6/15/2011 PLOT TIME: 1:02:49 PM

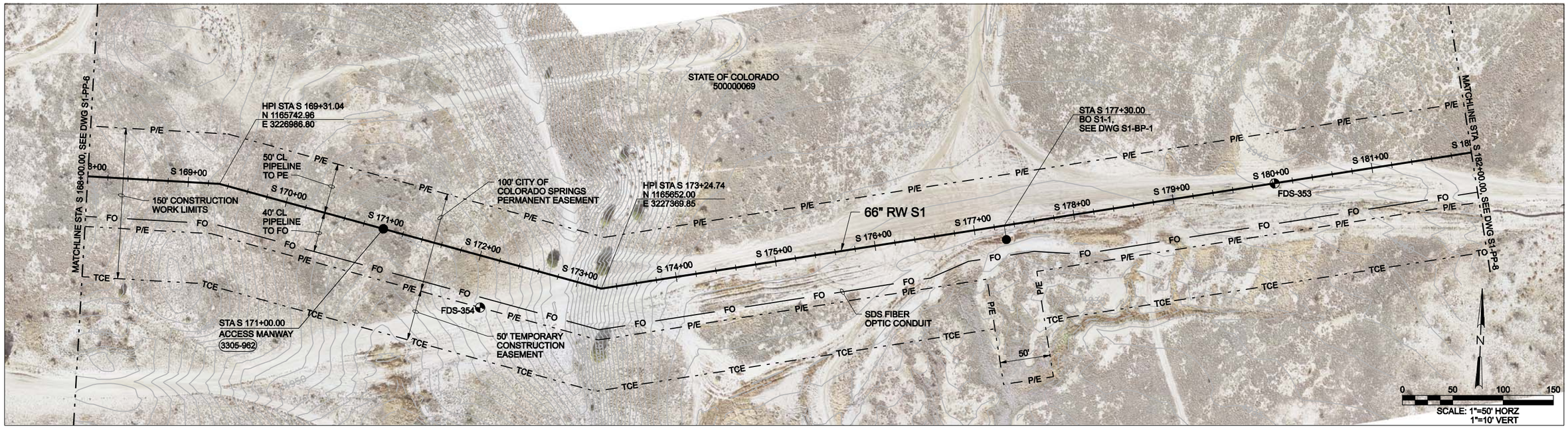

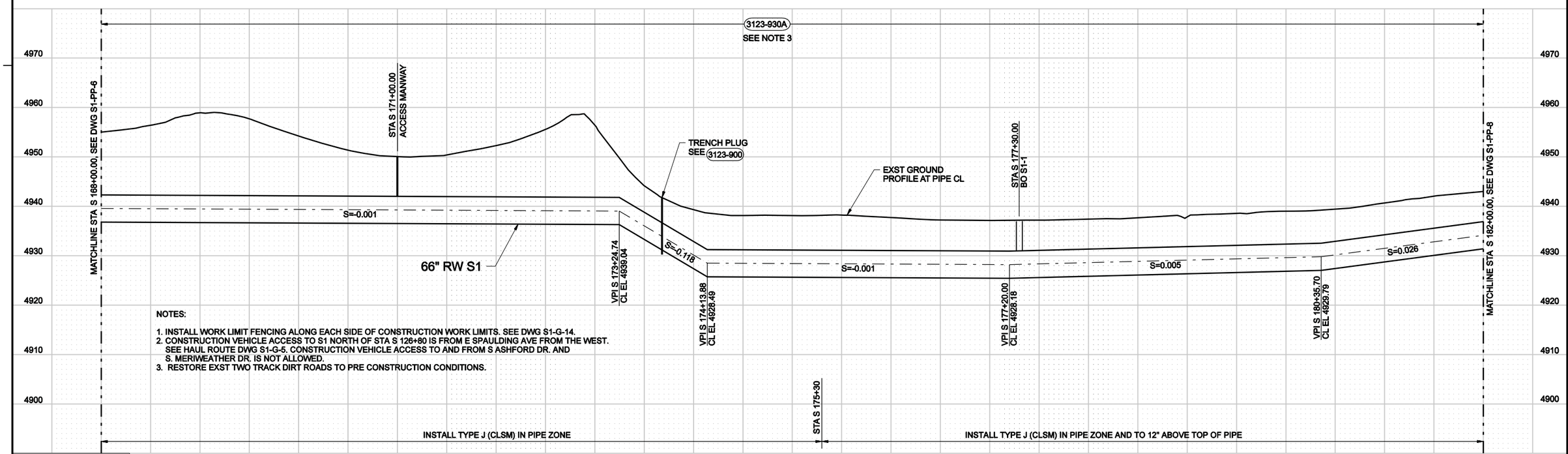

NOTES:

1. INSTALL WORK LIMIT FENCING ALONG EACH SIDE OF CONSTRUCTION WORK LIMITS. SEE DWG S1-G-14.
2. CONSTRUCTION VEHICLE ACCESS TO S1 NORTH OF STA S 126+80 IS FROM E SPAULDING AVE FROM THE WEST. SEE HAUL ROUTE DWG S1-G-5. CONSTRUCTION VEHICLE ACCESS TO AND FROM S ASHFORD DR. AND S. MERIWEATHER DR. IS NOT ALLOWED.
3. RESTORE EXST TWO TRACK DIRT ROADS TO PRE CONSTRUCTION CONDITIONS.

COLORADO LICENSED PROFESSIONAL ENGINEER
GODY L. HENRY
39310
6/30/11

DSGN	E FORD
DR	B NORVILLE
CHK	G SIMPSON
APVD	J HENRY

NO.	DATE	REVISION	BY	APVD

VERIFY SCALE
BAR IS ONE INCH ON ORIGINAL DRAWING.
0 1"
IF NOT ONE INCH ON THIS SHEET, ADJUST SCALES ACCORDINGLY.

CH2MHILL
Colorado Springs, CO 80903

SOUTHERN DELIVERY SYSTEM
RAW WATER PIPELINE
SOUTH SECTION ONE

PLAN AND PROFILE

STATION S 168+00 TO STATION S 182+00

SHEET	21
DWG	S1-PP-7
DATE	JULY 2011
PROJ	171473.20.SP

Colorado Springs Utilities Project Number: SDS-002 CSU Work Order Number: 1146977

FILENAME: SP105nP07d_171473.dgn PLOT DATE: 6/9/2011 PLOT TIME: 3:31:18 PM

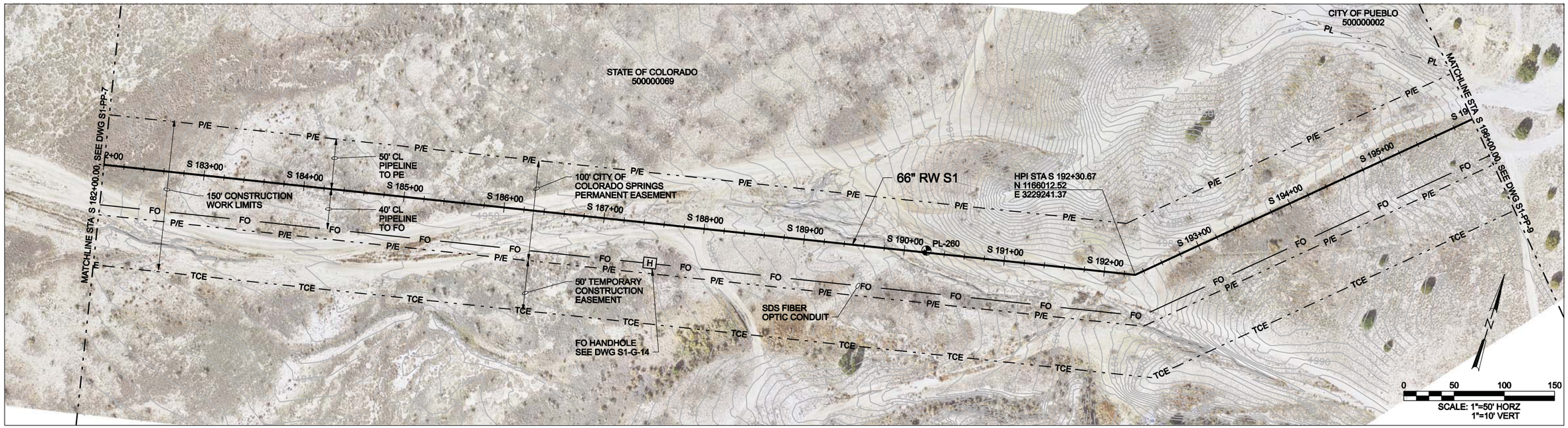

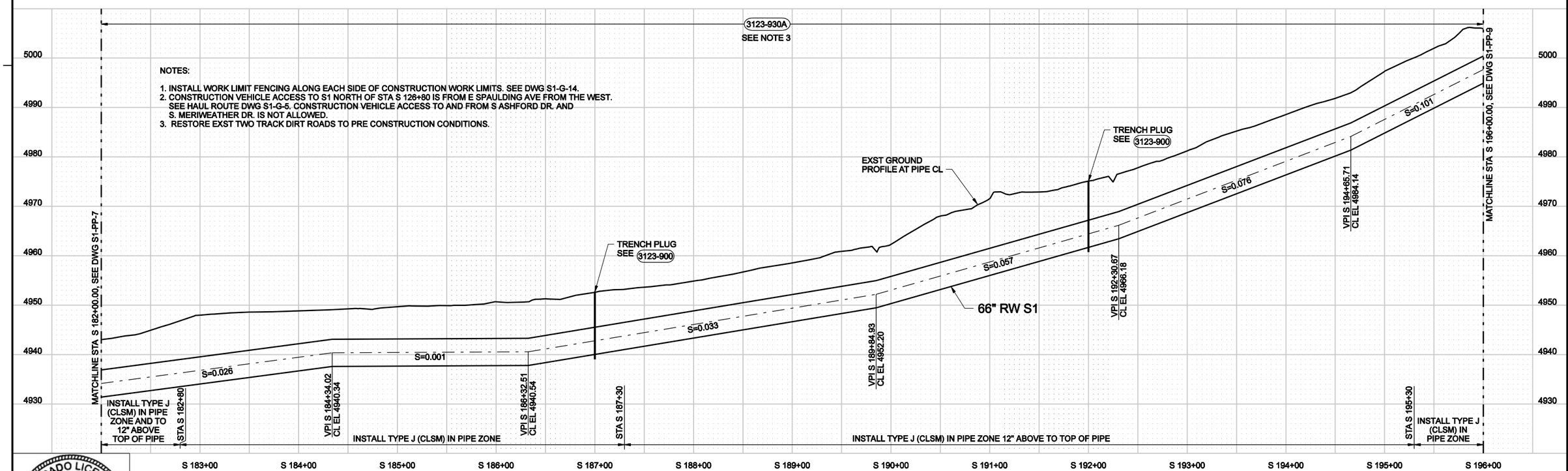

COLORADO LICENSED
CODY L. HENRY
39310
6/30/11
PROFESSIONAL ENGINEER

DSGN	E FORD				
DR	B NORVILLE				
CHK	G SIMPSON				
APVD	J HENRY	NO.	DATE	REVISION	BY	APVD

VERIFY SCALE
BAR IS ONE INCH ON ORIGINAL DRAWING.
0 1"
IF NOT ONE INCH ON THIS SHEET, ADJUST SCALES ACCORDINGLY.

CH2MHILL
Colorado Springs, CO 80903

SOUTHERN DELIVERY SYSTEM
RAW WATER PIPELINE
SOUTH SECTION ONE

PLAN AND PROFILE

STATION S 182+00 TO STATION S 196+00

SHEET	22
DWG	S1-PP-8
DATE	JULY 2011
PROJ	171473.20.SP

Colorado Springs Utilities Project Number: SDS-002 CSU Work Order Number: 1146977

FILENAME: SP105nP08d_171473.dgn PLOT DATE: 6/21/2011 PLOT TIME: 1:02:21 PM

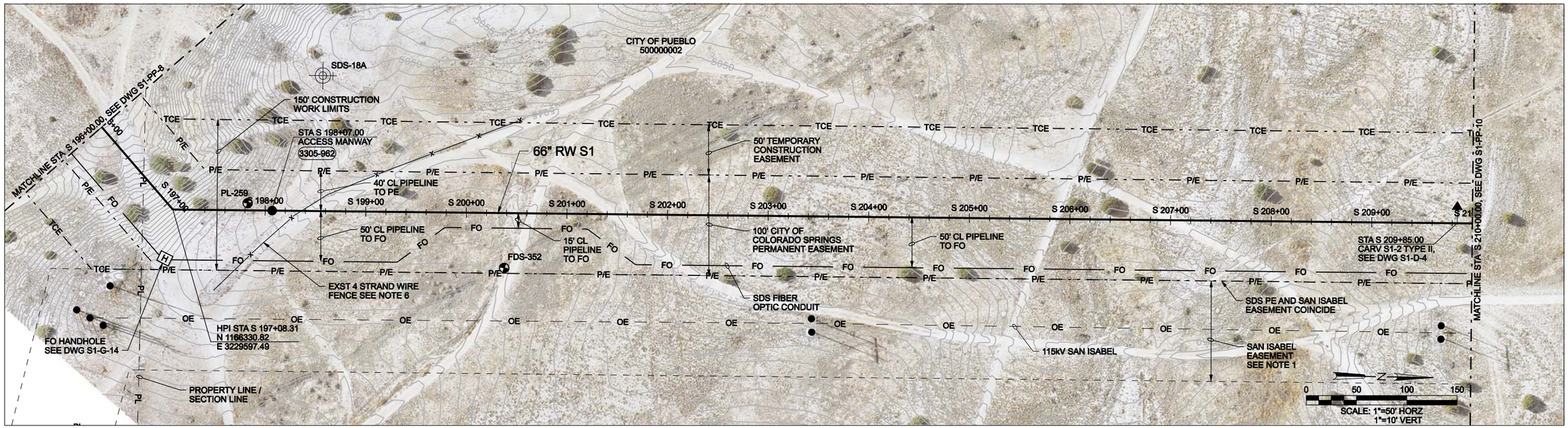

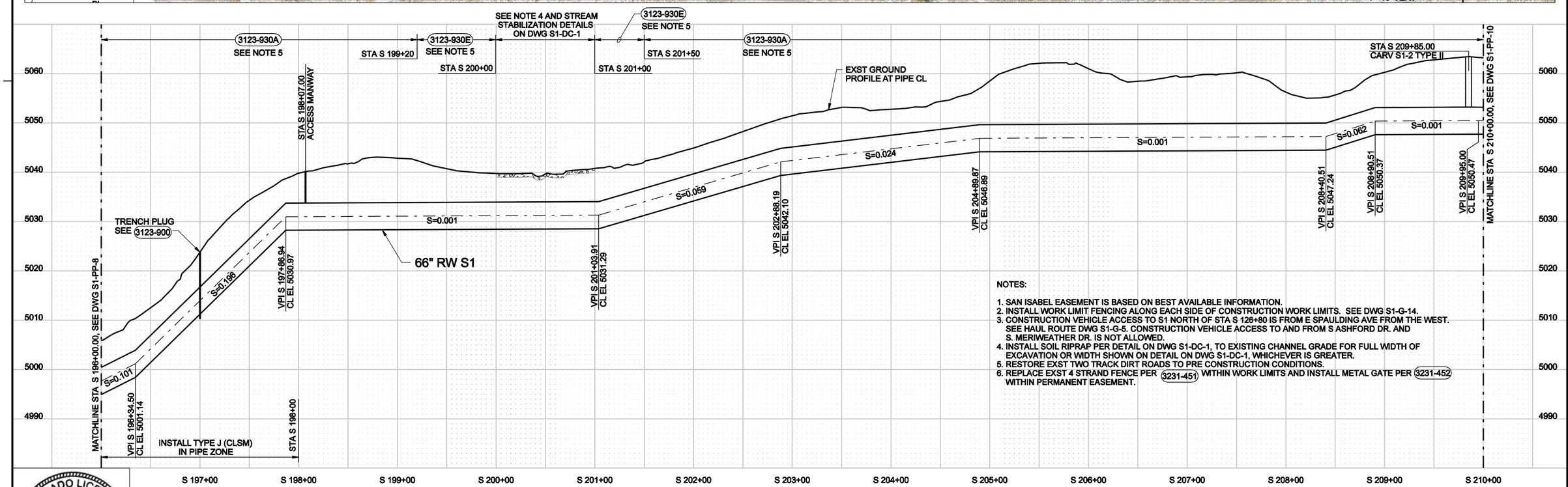

NOTES:

1. SAN ISABEL EASEMENT IS BASED ON BEST AVAILABLE INFORMATION.
2. INSTALL WORK LIMIT FENCING ALONG EACH SIDE OF CONSTRUCTION WORK LIMITS. SEE DWG S1-G-14.
3. CONSTRUCTION VEHICLE ACCESS TO S1 NORTH OF STA S 126+80 IS FROM E SPAULDING AVE FROM THE WEST. SEE HAUL ROUTE DWG S1-G-5. CONSTRUCTION VEHICLE ACCESS TO AND FROM S ASHFORD DR. AND S. MERIWEATHER DR. IS NOT ALLOWED.
4. INSTALL SOIL RIPRAP PER DETAIL ON DWG S1-DC-1, TO EXISTING CHANNEL GRADE FOR FULL WIDTH OF EXCAVATION OR WIDTH SHOWN ON DETAIL ON DWG S1-DC-1, WHICHEVER IS GREATER.
5. RESTORE EXST TWO TRACK DIRT ROADS TO PRE CONSTRUCTION CONDITIONS.
6. REPLACE EXST 4 STRAND FENCE PER 3231-451 WITHIN WORK LIMITS AND INSTALL METAL GATE PER 3231-452 WITHIN PERMANENT EASEMENT.

COLORADO LICENSED
GODY L. HENRY
39310
6/30/11
PROFESSIONAL ENGINEER

DSGN	E FORD				
DR	B NORVILLE				
CHK	G SIMPSON				
APVD	J HENRY	NO.	DATE	REVISION	BY	APVD

VERIFY SCALE
BAR IS ONE INCH ON ORIGINAL DRAWING.
0 1"
IF NOT ONE INCH ON THIS SHEET, ADJUST SCALES ACCORDINGLY.

CH2MHILL
Colorado Springs, CO 80903

SOUTHERN DELIVERY SYSTEM
RAW WATER PIPELINE
SOUTH SECTION ONE

PLAN AND PROFILE

STATION S 196+00 TO STATION S 210+00

SHEET	23
DWG	S1-PP-9
DATE	JULY 2011
PROJ	171473.20.SP

Colorado Springs Utilities Project Number: SDS-002 CSU Work Order Number: 1146977

FILENAME: SP105nP09d_171473.dgn PLOT DATE: 6/10/2011 PLOT TIME: 10:48:55 AM

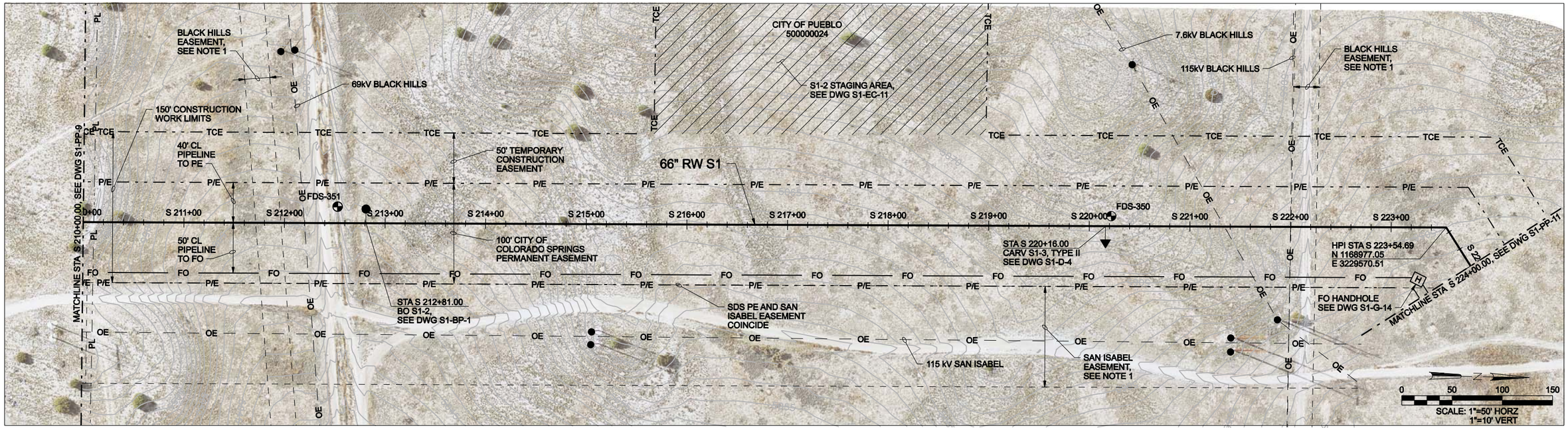

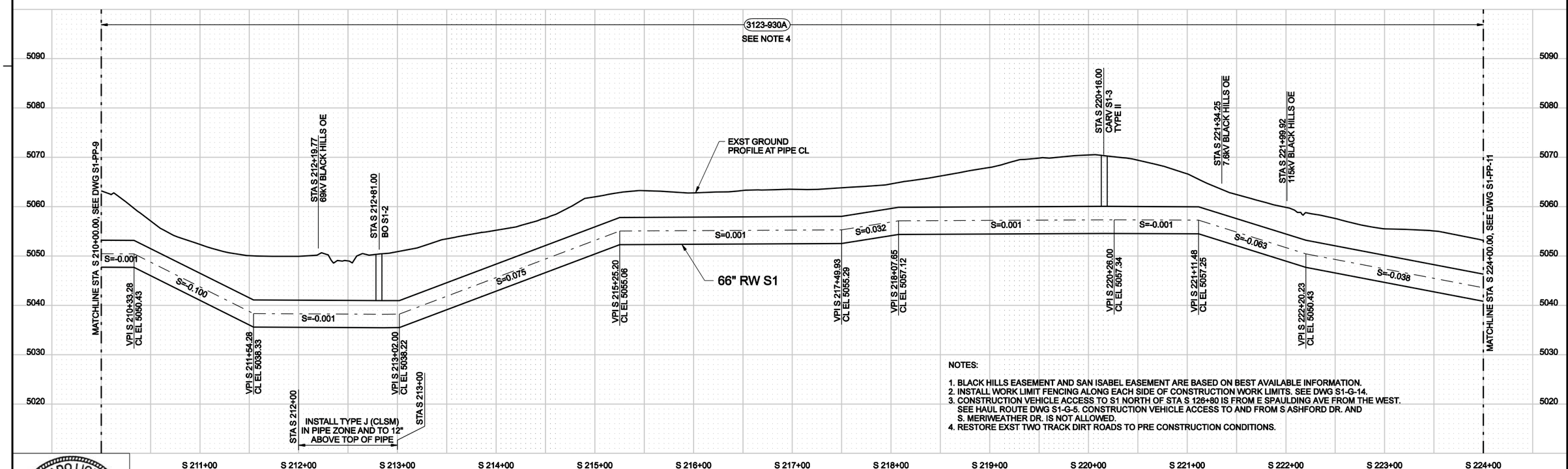

NOTES:

1. BLACK HILLS EASEMENT AND SAN ISABEL EASEMENT ARE BASED ON BEST AVAILABLE INFORMATION.
2. INSTALL WORK LIMIT FENCING ALONG EACH SIDE OF CONSTRUCTION WORK LIMITS. SEE DWG S1-G-14.
3. CONSTRUCTION VEHICLE ACCESS TO S1 NORTH OF STA S 126+80 IS FROM E SPAULDING AVE FROM THE WEST. SEE HAUL ROUTE DWG S1-G-5. CONSTRUCTION VEHICLE ACCESS TO AND FROM S ASHFORD DR. AND S. MERIWEATHER DR. IS NOT ALLOWED.
4. RESTORE EXST TWO TRACK DIRT ROADS TO PRE CONSTRUCTION CONDITIONS.

COLORADO LICENSED
RODY L. HENRY
39310
6/30/11
PROFESSIONAL ENGINEER

DSGN	E FORD
DR	B NORVILLE
CHK	G SIMPSON
APVD	J HENRY

NO.	DATE	REVISION	BY	APVD

VERIFY SCALE
BAR IS ONE INCH ON ORIGINAL DRAWING.
0 1"
IF NOT ONE INCH ON THIS SHEET, ADJUST SCALES ACCORDINGLY.

CH2MHILL
Colorado Springs, CO 80903

SOUTHERN DELIVERY SYSTEM
RAW WATER PIPELINE
SOUTH SECTION ONE

PLAN AND PROFILE

STATION S 210+00 TO STATION S 224+00

SHEET	24
DWG	S1-PP-10
DATE	JULY 2011
PROJ	171473.20.SP

Colorado Springs Utilities Project Number: SDS-002 CSU Work Order Number: 1146977

FILENAME: SP105nP10d_171473.dgn PLOT DATE: 6/10/2011 PLOT TIME: 10:58:54 AM

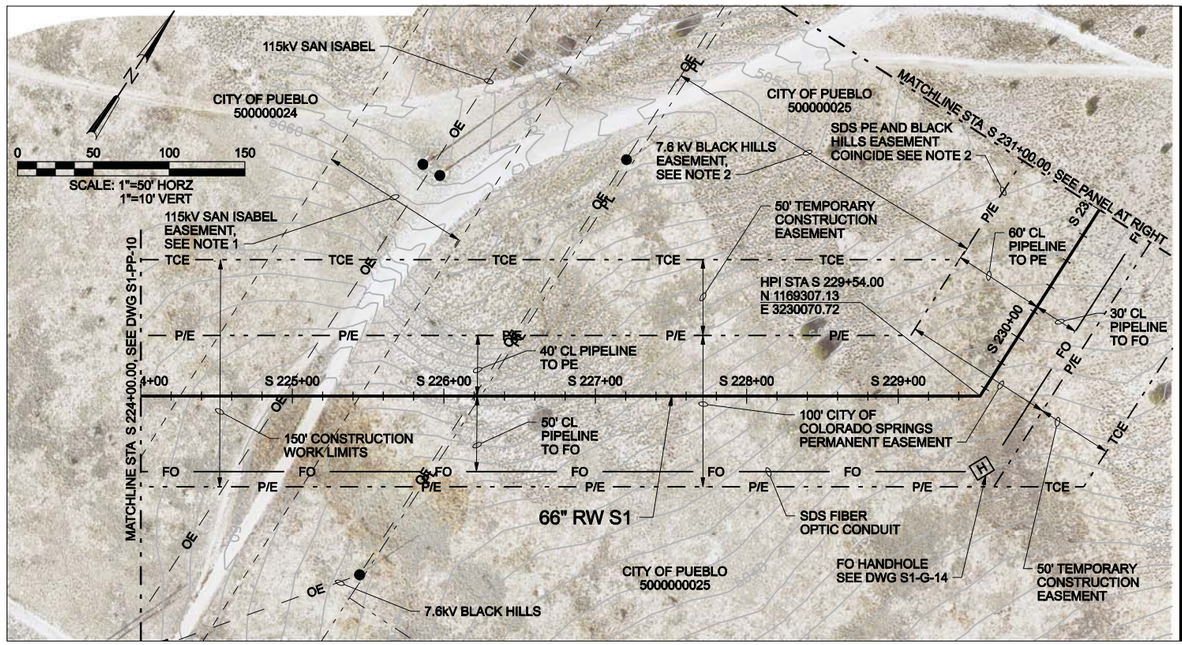

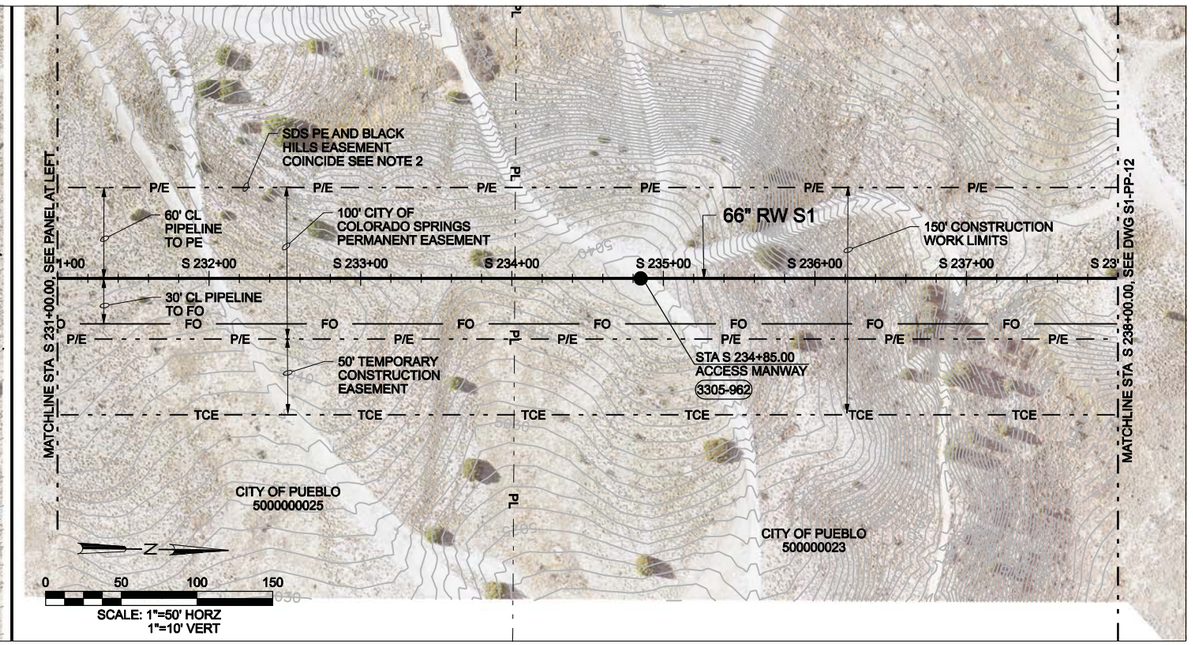

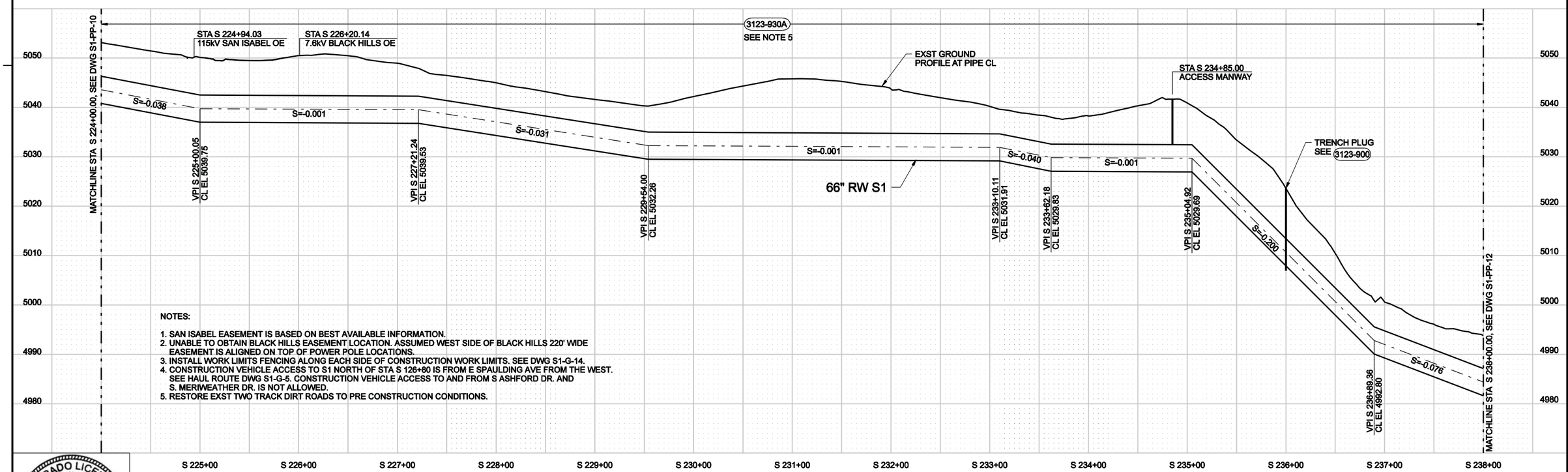

NOTES:

1. SAN ISABEL EASEMENT IS BASED ON BEST AVAILABLE INFORMATION.
2. UNABLE TO OBTAIN BLACK HILLS EASEMENT LOCATION. ASSUMED WEST SIDE OF BLACK HILLS 220' WIDE EASEMENT IS ALIGNED ON TOP OF POWER POLE LOCATIONS.
3. INSTALL WORK LIMITS FENCING ALONG EACH SIDE OF CONSTRUCTION WORK LIMITS. SEE DWG S1-G-14.
4. CONSTRUCTION VEHICLE ACCESS TO S1 NORTH OF STA S 126+80 IS FROM E SPAULDING AVE FROM THE WEST. SEE HAUL ROUTE DWG S1-G-5. CONSTRUCTION VEHICLE ACCESS TO AND FROM S ASHFORD DR. AND S. MERIWEATHER DR. IS NOT ALLOWED.
5. RESTORE EXST TWO TRACK DIRT ROADS TO PRE CONSTRUCTION CONDITIONS.

COLORADO LICENSED
RODY L. HENRY
39310
6/30/11
PROFESSIONAL ENGINEER

DSGN	E FORD
DR	B NORVILLE
CHK	G SIMPSON
APVD	J HENRY

NO.	DATE	REVISION	BY	APVD

VERIFY SCALE
BAR IS ONE INCH ON ORIGINAL DRAWING.
0 1"
IF NOT ONE INCH ON THIS SHEET, ADJUST SCALES ACCORDINGLY.

CH2MHILL
Colorado Springs, CO 80903

SOUTHERN DELIVERY SYSTEM
RAW WATER PIPELINE
SOUTH SECTION ONE

PLAN AND PROFILE

STATION S 224+00 TO STATION S 238+00

SHEET	25
DWG	S1-PP-11
DATE	JULY 2011
PROJ	171473.20.SP

Colorado Springs Utilities Project Number: SDS-002 CSU Work Order Number: 1146977

FILENAME: SP105nP11d_171473.dgn PLOT DATE: 6/18/2011 PLOT TIME: 9:55:12 AM

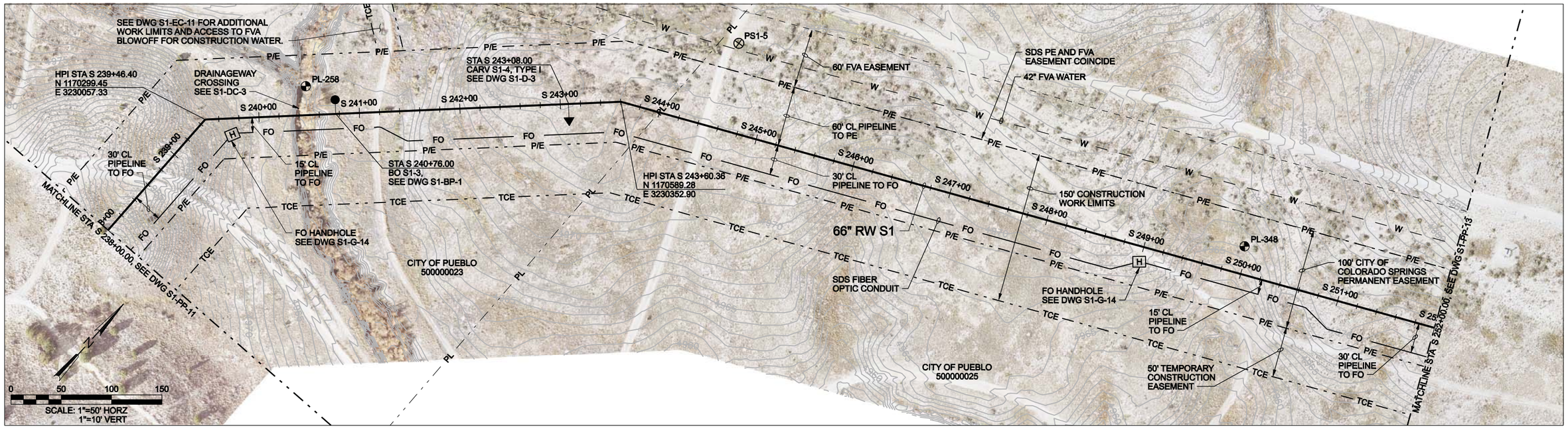

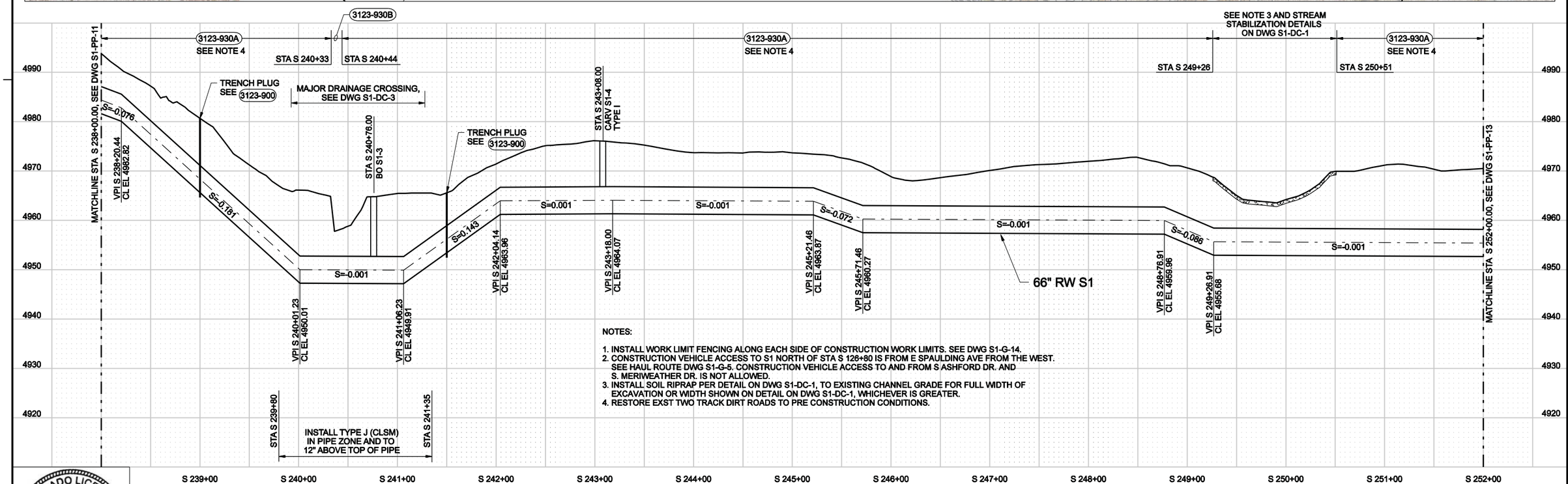

NOTES:

1. INSTALL WORK LIMIT FENCING ALONG EACH SIDE OF CONSTRUCTION WORK LIMITS. SEE DWG S1-G-14.
2. CONSTRUCTION VEHICLE ACCESS TO S1 NORTH OF STA S 126+80 IS FROM E SPAULDING AVE FROM THE WEST. SEE HAUL ROUTE DWG S1-G-5. CONSTRUCTION VEHICLE ACCESS TO AND FROM S ASHFORD DR. AND S. MERIWEATHER DR. IS NOT ALLOWED.
3. INSTALL SOIL RIPRAP PER DETAIL ON DWG S1-DC-1, TO EXISTING CHANNEL GRADE FOR FULL WIDTH OF EXCAVATION OR WIDTH SHOWN ON DETAIL ON DWG S1-DC-1, WHICHEVER IS GREATER.
4. RESTORE EXST TWO TRACK DIRT ROADS TO PRE CONSTRUCTION CONDITIONS.

COLORADO LICENSED
BODY L. HENRY
39310
6/30/11
PROFESSIONAL ENGINEER

DSGN	E FORD
DR	B NORVILLE
CHK	G SIMPSON
APVD	J HENRY

NO.	DATE	REVISION	BY	APVD

VERIFY SCALE
BAR IS ONE INCH ON ORIGINAL DRAWING.
0 1"
IF NOT ONE INCH ON THIS SHEET, ADJUST SCALES ACCORDINGLY.

CH2MHILL
Colorado Springs, CO 80903

SOUTHERN DELIVERY SYSTEM
RAW WATER PIPELINE
SOUTH SECTION ONE

PLAN AND PROFILE

STATION S 238+00 TO STATION S 252+00

SHEET	26
DWG	S1-PP-12
DATE	JULY 2011
PROJ	171473.20.SP

Colorado Springs Utilities Project Number: SDS-002 CSU Work Order Number: 1146977

FILENAME: SP105nP12d_171473.dgn PLOT DATE: 6/29/2011 PLOT TIME: 10:08:01 AM

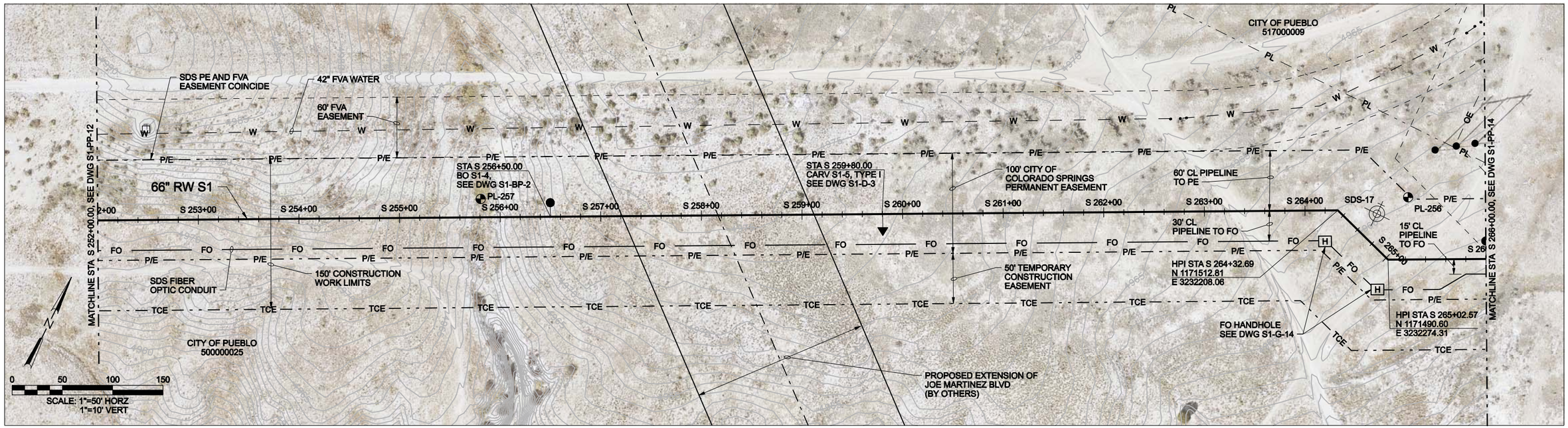

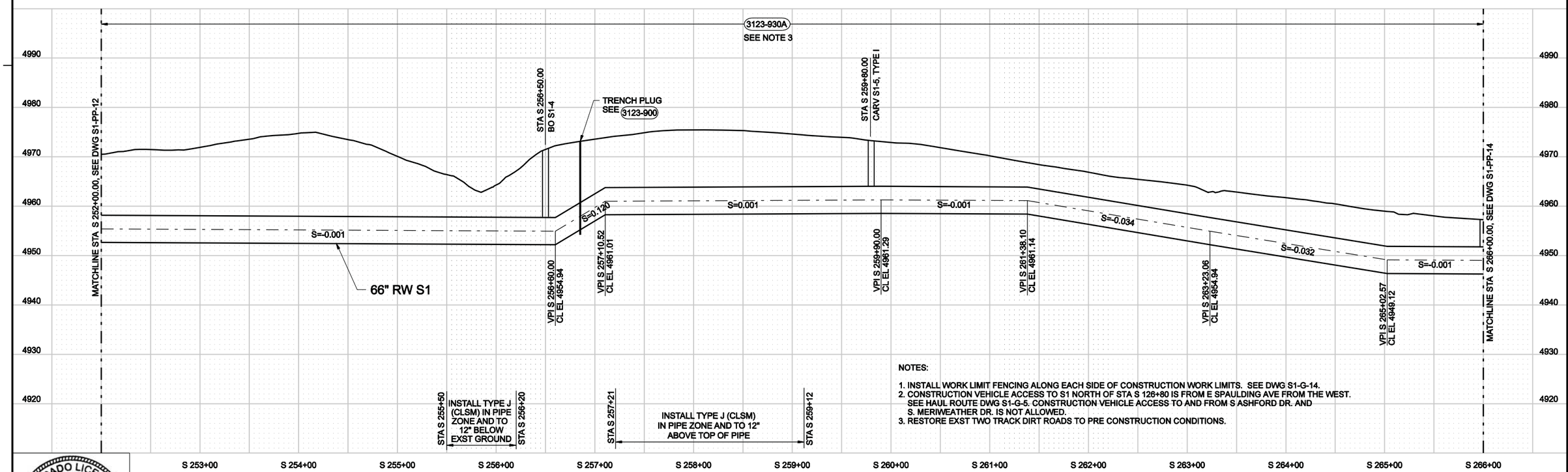

NOTES:

1. INSTALL WORK LIMIT FENCING ALONG EACH SIDE OF CONSTRUCTION WORK LIMITS. SEE DWG S1-G-14.
2. CONSTRUCTION VEHICLE ACCESS TO S1 NORTH OF STA S 126+80 IS FROM E SPAULDING AVE FROM THE WEST. SEE HAUL ROUTE DWG S1-G-5. CONSTRUCTION VEHICLE ACCESS TO AND FROM S ASHFORD DR. AND S. MERIWEATHER DR. IS NOT ALLOWED.
3. RESTORE EXST TWO TRACK DIRT ROADS TO PRE CONSTRUCTION CONDITIONS.

COLORADO LICENSED BODY L. HENRY 39310 6/30/11 PROFESSIONAL ENGINEER

DSGN	E FORD				
DR	B NORVILLE				
CHK	G SIMPSON				
APVD	J HENRY	NO.	DATE	REVISION	BY	APVD

VERIFY SCALE
BAR IS ONE INCH ON ORIGINAL DRAWING.
0 1"
IF NOT ONE INCH ON THIS SHEET, ADJUST SCALES ACCORDINGLY.

CH2MHILL
Colorado Springs, CO 80903

SOUTHERN DELIVERY SYSTEM
RAW WATER PIPELINE
SOUTH SECTION ONE

PLAN AND PROFILE

STATION S 252+00 TO STATION S 266+00

SHEET	27
DWG	S1-PP-13
DATE	JULY 2011
PROJ	171473.20.SP

Colorado Springs Utilities Project Number: SDS-002 CSU Work Order Number: 1146977

FILENAME: SP105nP13d_171473.dgn PLOT DATE: 6/10/2011 PLOT TIME: 11:47:42 AM

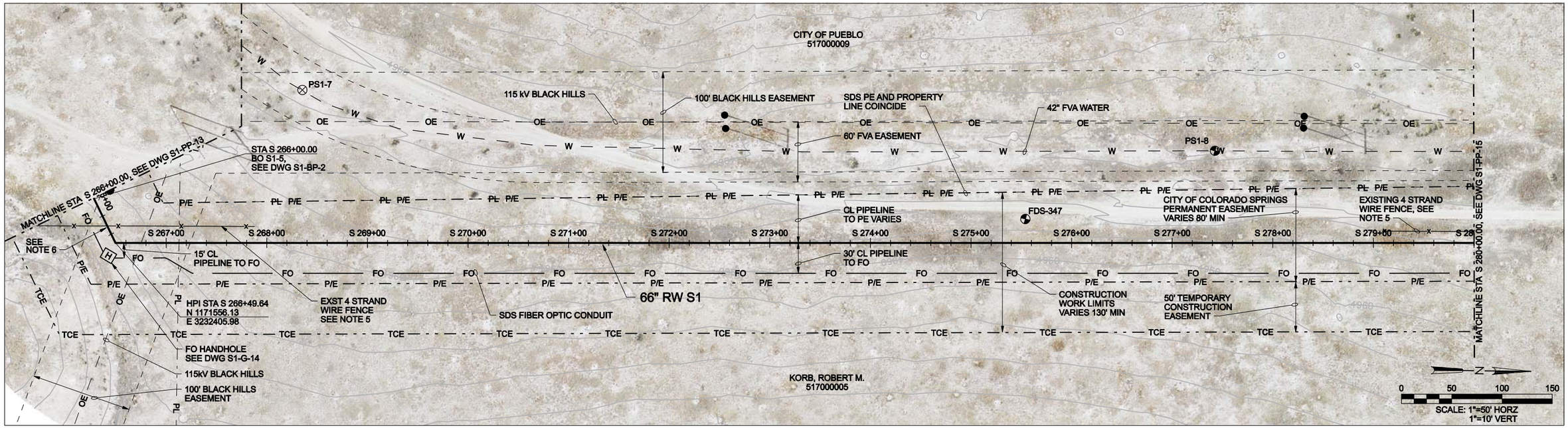

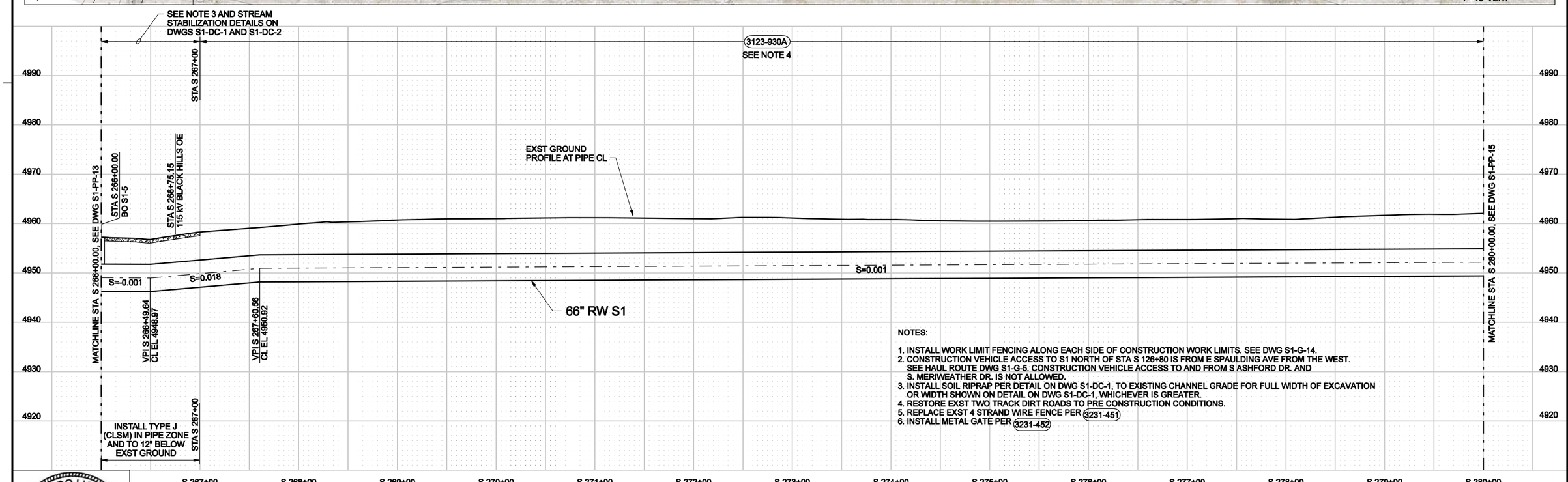

NOTES:

1. INSTALL WORK LIMIT FENCING ALONG EACH SIDE OF CONSTRUCTION WORK LIMITS. SEE DWG S1-G-14.
2. CONSTRUCTION VEHICLE ACCESS TO S1 NORTH OF STA S 126+80 IS FROM E SPAULDING AVE FROM THE WEST. SEE HAUL ROUTE DWG S1-G-5. CONSTRUCTION VEHICLE ACCESS TO AND FROM S ASHFORD DR. AND S. MERIWEATHER DR. IS NOT ALLOWED.
3. INSTALL SOIL RIPRAP PER DETAIL ON DWG S1-DC-1, TO EXISTING CHANNEL GRADE FOR FULL WIDTH OF EXCAVATION OR WIDTH SHOWN ON DETAIL ON DWG S1-DC-1, WHICHEVER IS GREATER.
4. RESTORE EXST TWO TRACK DIRT ROADS TO PRE CONSTRUCTION CONDITIONS.
5. REPLACE EXST 4 STRAND WIRE FENCE PER 3231-451
6. INSTALL METAL GATE PER 3231-452

COLORADO LICENSED PROFESSIONAL ENGINEER
JODY L. HENRY
39310
6/30/11

DSGN	E FORD
DR	B NORVILLE
CHK	G SIMPSON
APVD	J HENRY

NO.	DATE	REVISION	BY	APVD

VERIFY SCALE
BAR IS ONE INCH ON ORIGINAL DRAWING.
0 1"
IF NOT ONE INCH ON THIS SHEET, ADJUST SCALES ACCORDINGLY.

CH2MHILL
Colorado Springs, CO 80903

SOUTHERN DELIVERY SYSTEM
RAW WATER PIPELINE
SOUTH SECTION ONE

PLAN AND PROFILE

STATION S 266+00 TO STATION S 280+00

SHEET	28
DWG	S1-PP-14
DATE	JULY 2011
PROJ	171473.20.SP

Colorado Springs Utilities Project Number: SDS-002 CSU Work Order Number: 1146977

FILENAME: SP105nP14d_171473.dgn PLOT DATE: 6/30/2011 PLOT TIME: 10:10:45 AM

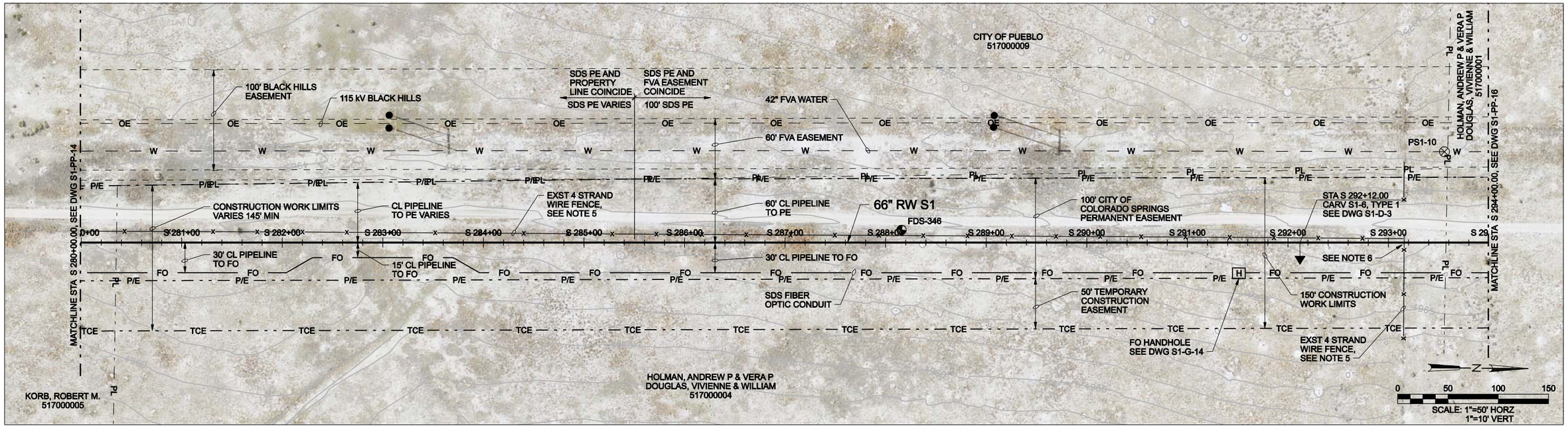

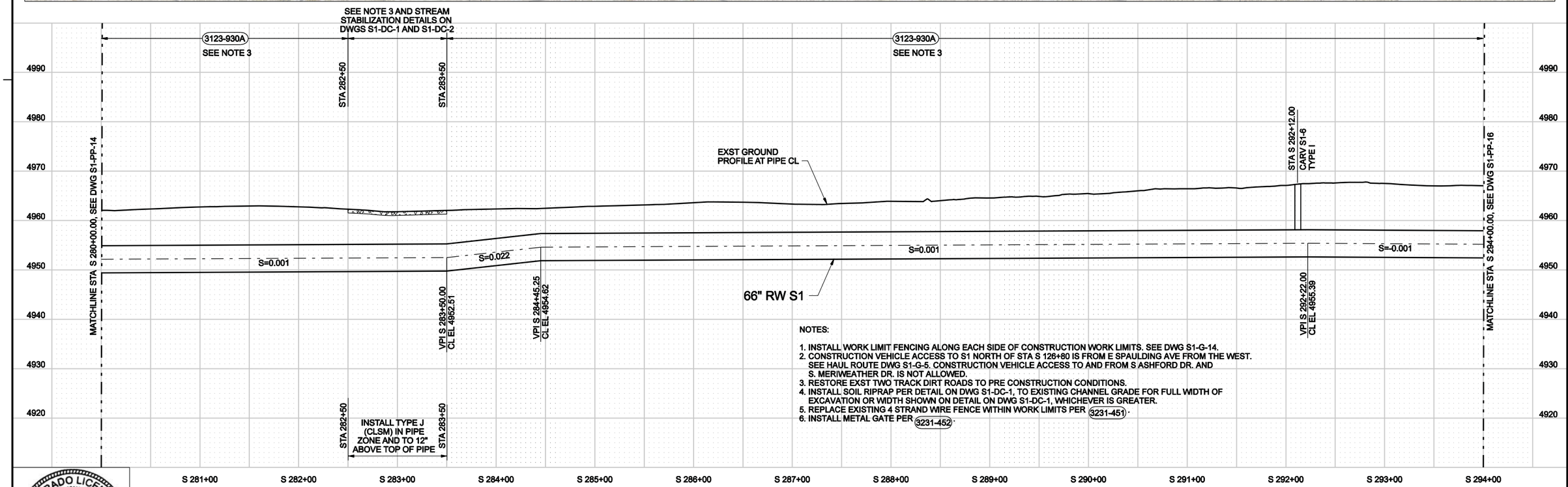

NOTES:

1. INSTALL WORK LIMIT FENCING ALONG EACH SIDE OF CONSTRUCTION WORK LIMITS. SEE DWG S1-G-14.
2. CONSTRUCTION VEHICLE ACCESS TO S1 NORTH OF STA S 126+80 IS FROM E SPAULDING AVE FROM THE WEST. SEE HAUL ROUTE DWG S1-G-5. CONSTRUCTION VEHICLE ACCESS TO AND FROM S ASHFORD DR. AND S. MERIWEATHER DR. IS NOT ALLOWED.
3. RESTORE EXST TWO TRACK DIRT ROADS TO PRE CONSTRUCTION CONDITIONS.
4. INSTALL SOIL RIPRAP PER DETAIL ON DWG S1-DC-1, TO EXISTING CHANNEL GRADE FOR FULL WIDTH OF EXCAVATION OR WIDTH SHOWN ON DETAIL ON DWG S1-DC-1, WHICHEVER IS GREATER.
5. REPLACE EXISTING 4 STRAND WIRE FENCE WITHIN WORK LIMITS PER 3231-451.
6. INSTALL METAL GATE PER 3231-452.

COLORADO LICENSED PROFESSIONAL ENGINEER
GODY L. HENRY
39310
6/30/11

DSGN	E FORD				
DR	B NORVILLE				
CHK	G SIMPSON				
APVD	J HENRY	NO.	DATE	REVISION	BY	APVD

VERIFY SCALE
BAR IS ONE INCH ON ORIGINAL DRAWING.
0 1"
IF NOT ONE INCH ON THIS SHEET, ADJUST SCALES ACCORDINGLY.

CH2MHILL
Colorado Springs, CO 80903

SOUTHERN DELIVERY SYSTEM
RAW WATER PIPELINE
SOUTH SECTION ONE

PLAN AND PROFILE

STATION S 280+00 TO STATION S 294+00

SHEET	29
DWG	S1-PP-15
DATE	JULY 2011
PROJ	171473.20.SP

Colorado Springs Utilities Project Number: SDS-002 CSU Work Order Number: 1146977

FILENAME: SP105nP15d_171473.dgn PLOT DATE: 6/30/2011 PLOT TIME: 11:13:58 AM

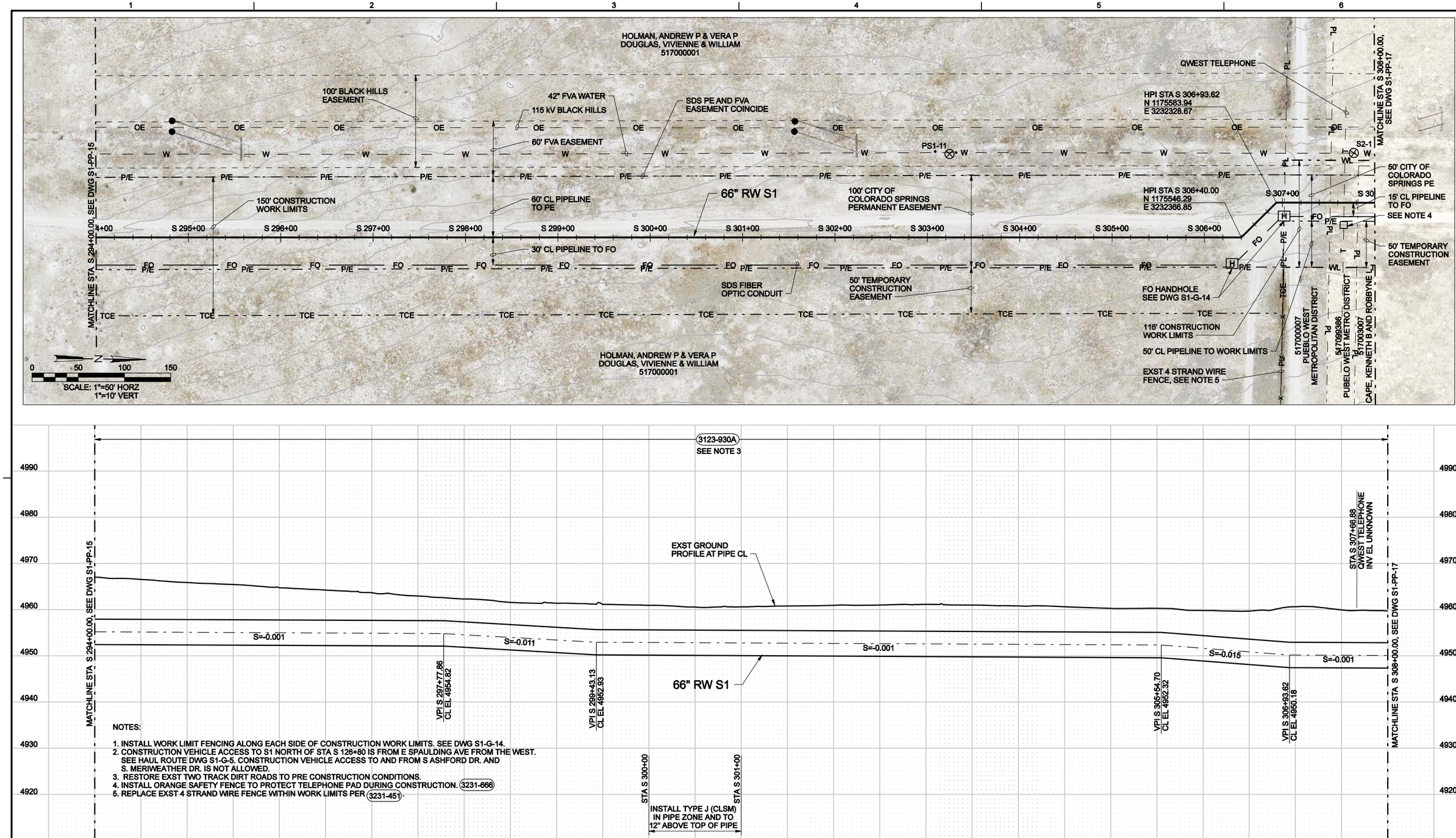

NOTES:

1. INSTALL WORK LIMIT FENCING ALONG EACH SIDE OF CONSTRUCTION WORK LIMITS. SEE DWG S1-G-14.
2. CONSTRUCTION VEHICLE ACCESS TO S1 NORTH OF STA S 126+80 IS FROM E SPAULDING AVE FROM THE WEST. SEE HAUL ROUTE DWG S1-G-5. CONSTRUCTION VEHICLE ACCESS TO AND FROM S ASHFORD DR. AND S. MERIWEATHER DR. IS NOT ALLOWED.
3. RESTORE EXST TWO TRACK DIRT ROADS TO PRE CONSTRUCTION CONDITIONS.
4. INSTALL ORANGE SAFETY FENCE TO PROTECT TELEPHONE PAD DURING CONSTRUCTION. (3231-666)
5. REPLACE EXST 4 STRAND WIRE FENCE WITHIN WORK LIMITS PER (3231-451).

COLORADO LICENSED
CODY L. HENRY
39310
6/30/11
PROFESSIONAL ENGINEER

DSGN	E FORD
DR	B NORVILLE
CHK	G SIMPSON
APVD	J HENRY

NO.	DATE	REVISION	BY	APVD

VERIFY SCALE
BAR IS ONE INCH ON ORIGINAL DRAWING.
0 1"
IF NOT ONE INCH ON THIS SHEET, ADJUST SCALES ACCORDINGLY.

CH2MHILL
Colorado Springs, CO 80903

SOUTHERN DELIVERY SYSTEM
RAW WATER PIPELINE
SOUTH SECTION ONE

PLAN AND PROFILE

STATION S 294+00 TO STATION S 308+00

SHEET	30
DWG	S1-PP-16
DATE	JULY 2011
PROJ	171473.20.SP

Colorado Springs Utilities Project Number: SDS-002 CSU Work Order Number: 1146977

FILENAME: SP105nP16d_171473.dgn PLOT DATE: 6/30/2011 PLOT TIME: 11:17:06 AM

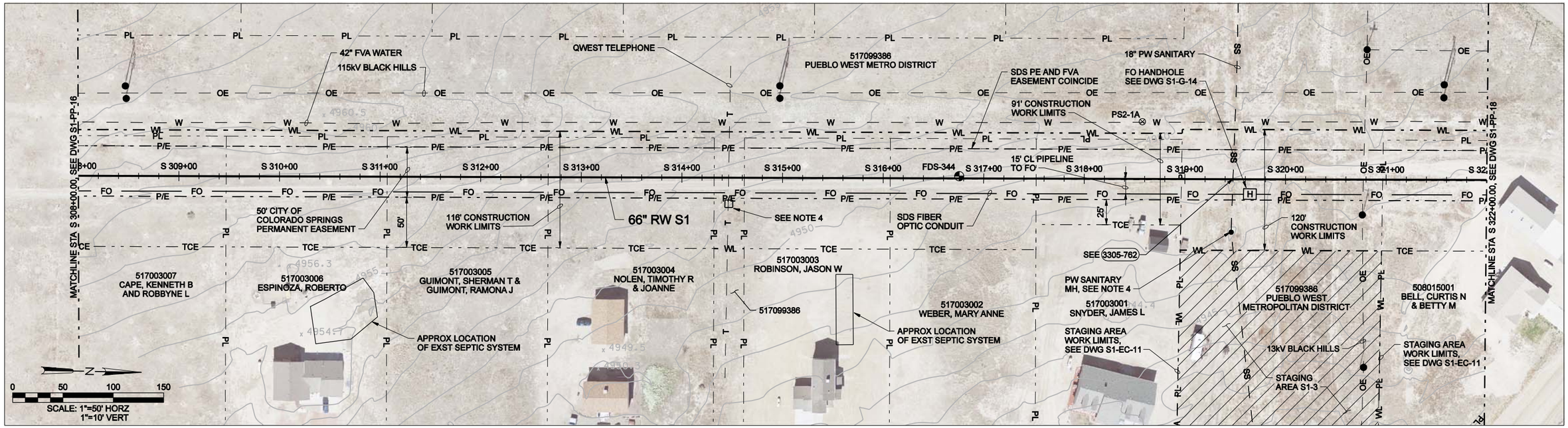

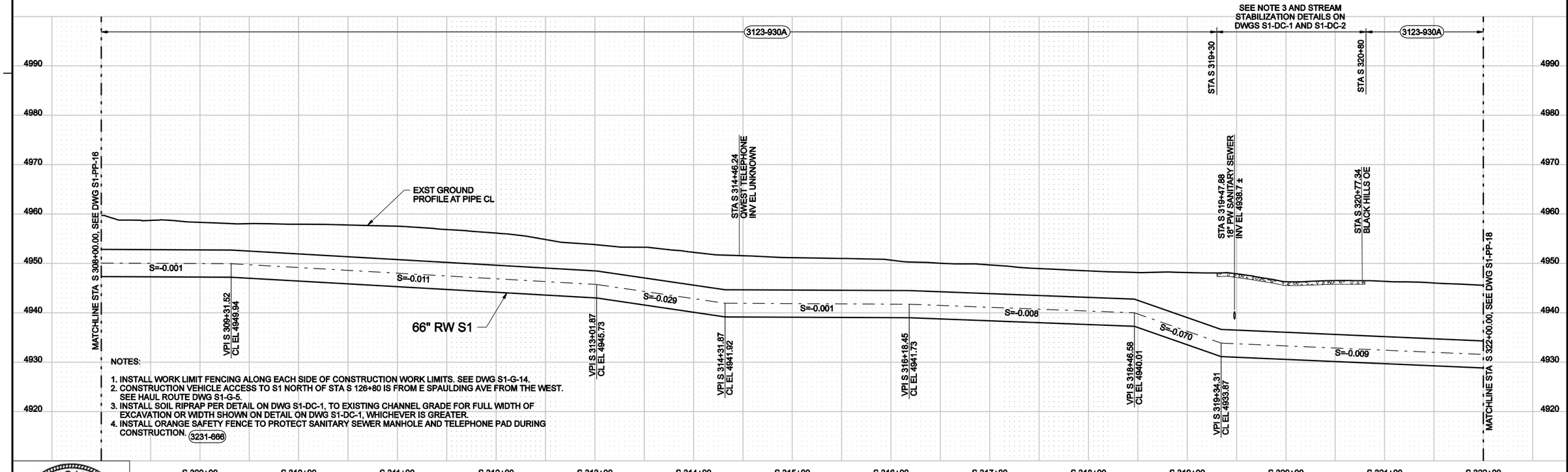

NOTES:

1. INSTALL WORK LIMIT FENCING ALONG EACH SIDE OF CONSTRUCTION WORK LIMITS. SEE DWG S1-G-14.
2. CONSTRUCTION VEHICLE ACCESS TO S1 NORTH OF STA S 126+80 IS FROM E SPAULDING AVE FROM THE WEST. SEE HAUL ROUTE DWG S1-G-5.
3. INSTALL SOIL RIPRAP PER DETAIL ON DWG S1-DC-1, TO EXISTING CHANNEL GRADE FOR FULL WIDTH OF EXCAVATION OR WIDTH SHOWN ON DETAIL ON DWG S1-DC-1, WHICHEVER IS GREATER.
4. INSTALL ORANGE SAFETY FENCE TO PROTECT SANITARY SEWER MANHOLE AND TELEPHONE PAD DURING CONSTRUCTION. 3231-666

COLORADO LICENSED
CODY L. HENRY
39310
6/30/11
PROFESSIONAL ENGINEER

DSGN	E FORD				
DR	B NORVILLE				
CHK	G SIMPSON				
APVD	J HENRY	NO.	DATE	REVISION	BY	APVD

VERIFY SCALE
BAR IS ONE INCH ON ORIGINAL DRAWING.
0 1"
IF NOT ONE INCH ON THIS SHEET, ADJUST SCALES ACCORDINGLY.

CH2MHILL
Colorado Springs, CO 80903

SOUTHERN DELIVERY SYSTEM
RAW WATER PIPELINE
SOUTH SECTION ONE

PLAN AND PROFILE

STATION S 308+00 TO STATION S 322+00

SHEET	31
DWG	S1-PP-17
DATE	JULY 2011
PROJ	171473.20.SP

Colorado Springs Utilities Project Number: SDS-002 CSU Work Order Number: 1146977

FILENAME: SP105nP17d_171473.dgn PLOT DATE: 6/29/2011 PLOT TIME: 8:37:38 AM

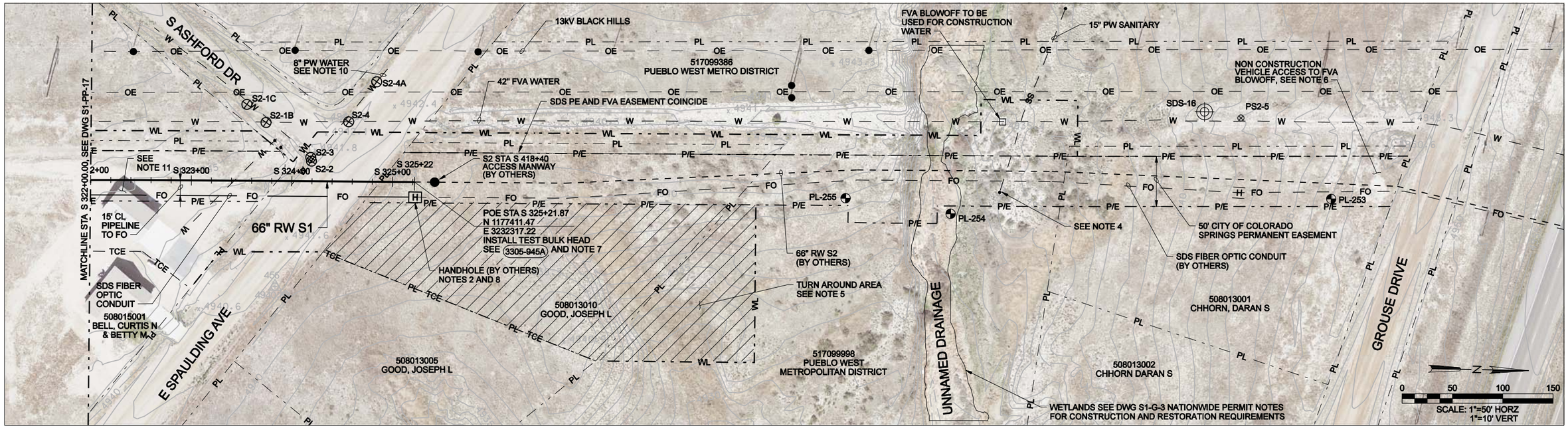

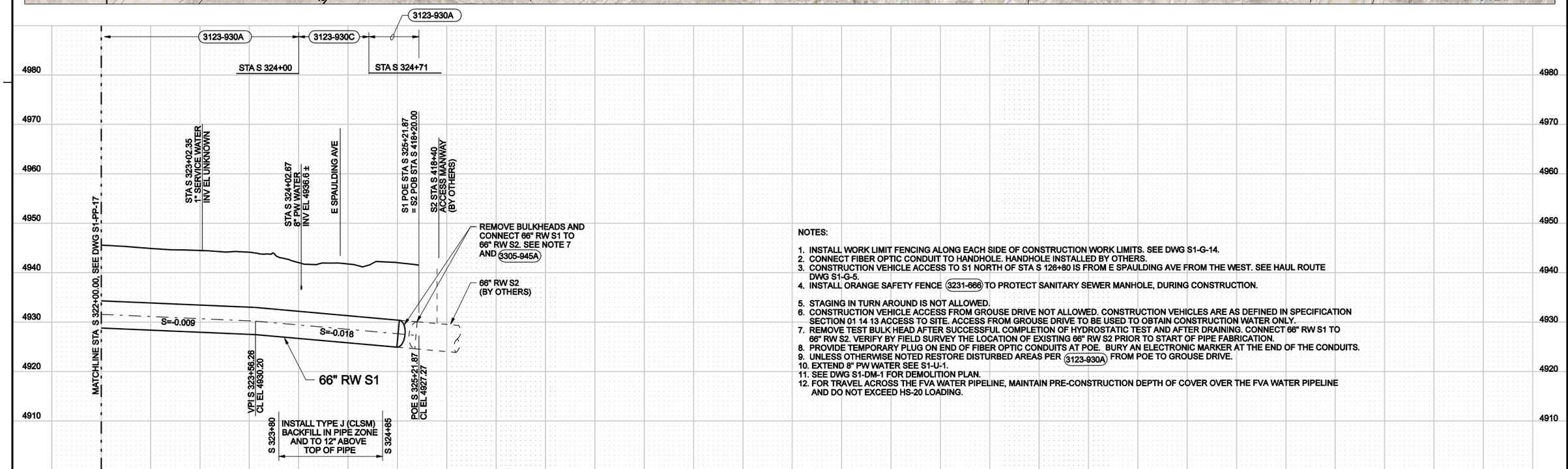

NOTES:

1. INSTALL WORK LIMIT FENCING ALONG EACH SIDE OF CONSTRUCTION WORK LIMITS. SEE DWG S1-G-14.
2. CONNECT FIBER OPTIC CONDUIT TO HANDHOLE. HANDHOLE INSTALLED BY OTHERS.
3. CONSTRUCTION VEHICLE ACCESS TO S1 NORTH OF STA S 126+80 IS FROM E SPAULDING AVE FROM THE WEST. SEE HAUL ROUTE DWG S1-G-5.
4. INSTALL ORANGE SAFETY FENCE 3231-666 TO PROTECT SANITARY SEWER MANHOLE, DURING CONSTRUCTION.
5. STAGING IN TURN AROUND IS NOT ALLOWED.
6. CONSTRUCTION VEHICLE ACCESS FROM GROUSE DRIVE NOT ALLOWED. CONSTRUCTION VEHICLES ARE AS DEFINED IN SPECIFICATION SECTION 01 14 13 ACCESS TO SITE. ACCESS FROM GROUSE DRIVE TO BE USED TO OBTAIN CONSTRUCTION WATER ONLY.
7. REMOVE TEST BULKHEAD AFTER SUCCESSFUL COMPLETION OF HYDROSTATIC TEST AND AFTER DRAINING. CONNECT 66" RW S1 TO 66" RW S2. VERIFY BY FIELD SURVEY THE LOCATION OF EXISTING 66" RW S2 PRIOR TO START OF PIPE FABRICATION.
8. PROVIDE TEMPORARY PLUG ON END OF FIBER OPTIC CONDUITS AT POE. BURY AN ELECTRONIC MARKER AT THE END OF THE CONDUITS.
9. UNLESS OTHERWISE NOTED RESTORE DISTURBED AREAS PER 3123-930A FROM POE TO GROUSE DRIVE.
10. EXTEND 8" PW WATER SEE S1-U-1.
11. SEE DWG S1-DM-1 FOR DEMOLITION PLAN.
12. FOR TRAVEL ACROSS THE FVA WATER PIPELINE, MAINTAIN PRE-CONSTRUCTION DEPTH OF COVER OVER THE FVA WATER PIPELINE AND DO NOT EXCEED HS-20 LOADING.

COLORADO LICENSED PROFESSIONAL ENGINEER RODY L. HENRY 39310 6/30/11

DSGN	E FORD					
DR	B NORVILLE					
CHK	G SIMPSON					
APVD	J HENRY	NO.	DATE	REVISION	BY	APVD

VERIFY SCALE
BAR IS ONE INCH ON ORIGINAL DRAWING.
0 1"
IF NOT ONE INCH ON THIS SHEET, ADJUST SCALES ACCORDINGLY.

CH2MHILL
Colorado Springs, CO 80903

SOUTHERN DELIVERY SYSTEM
RAW WATER PIPELINE
SOUTH SECTION ONE

PLAN AND PROFILE
STATION S 322+00 TO POE STATION S 325+21.87

SHEET	32
DWG	S1-PP-18
DATE	JULY 2011
PROJ	171473.20.SP

Colorado Springs Utilities Project Number: SDS-002 CSU Work Order Number: 1146977

FILENAME: SP105nP18d_171473.dgn PLOT DATE: 6/29/2011 PLOT TIME: 10:12:03 AM

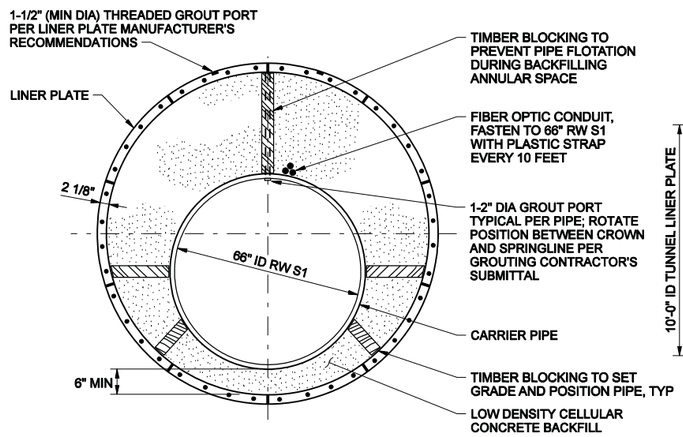

FINISHED TUNNEL SECTION A
NTS

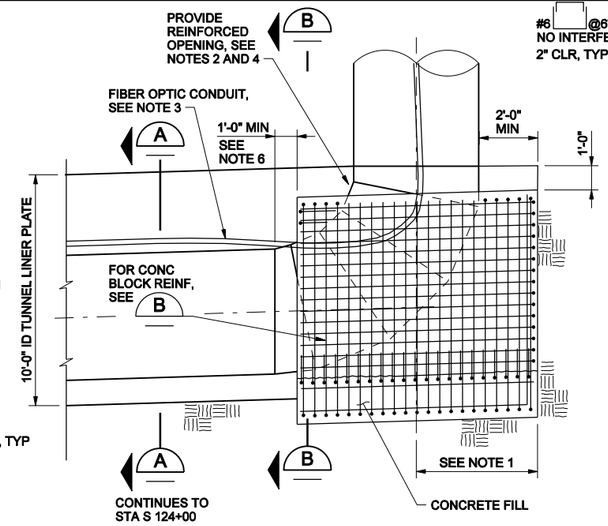

DETAIL 1
NTS

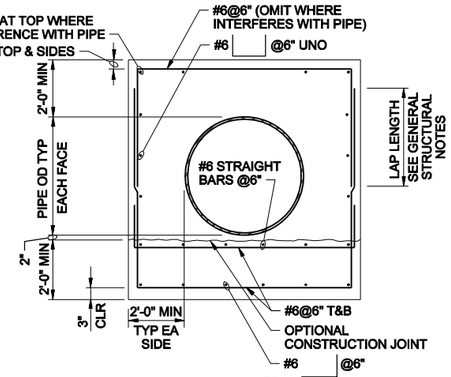

SECTION B
NTS

NOTES:

1. TO BE DETERMINED BY THE CONTRACTOR.
2. SIZE EXCAVATION AND PRIMARY SUPPORT AS REQUIRED TO CONSTRUCT RISER SHAFT AND INSTALL RISER PIPE AND ASSOCIATED ELBOW.
3. INSTALL FIBER OPTIC CONDUIT WITH SMOOTH TRANSITION FROM DOWNSTREAM AT SPECIAL ACCESS MANWAY VAULT TO CONDUIT ALIGNMENT. INSTALL FIBER OPTIC CONDUIT ON TOP SIDE OF 66" RW PIPE IN TUNNEL. TRANSITION FIBER OPTIC CONDUIT FROM TUNNEL TO SHAFT WITHIN A MINIMUM BEND RADIUS OF 6'-0". SECURE CONDUIT TO 66" RW PIPE IN TUNNEL AND RISER SHAFT.
4. PROVIDE REINFORCED OPENING IN THE LINER PLATE. COORDINATE INSTALLATION OF LINER PLATE WITH BORING OF RISER SHAFT.
5. DETERMINE THE EXCAVATED SIZE OF THE TUNNEL TO ACCOMMODATE CONSTRUCTION OF THE RISER SHAFT AND PLACEMENT OF THE RISER PIPE AND ASSOCIATED ELBOW AND FIBER OPTIC CONDUIT. TUNNEL EXCAVATION CANNOT EXCEED OD OF THE LINER PLATE PLUS THE MAXIMUM ALLOWABLE OVERCUT WITHOUT APPROVAL OF THE CONSTRUCTION MANAGER AND UPRR.
6. MAINTAIN A 1'-0" MIN HOLDBACK OF CONCRETE FILL FROM PIPE JOINT ON THE END OF THE ELBOW FITTING.
7. TUNNEL BEGINS AT STA S 124+00. SEE DWG S1-PP-3.

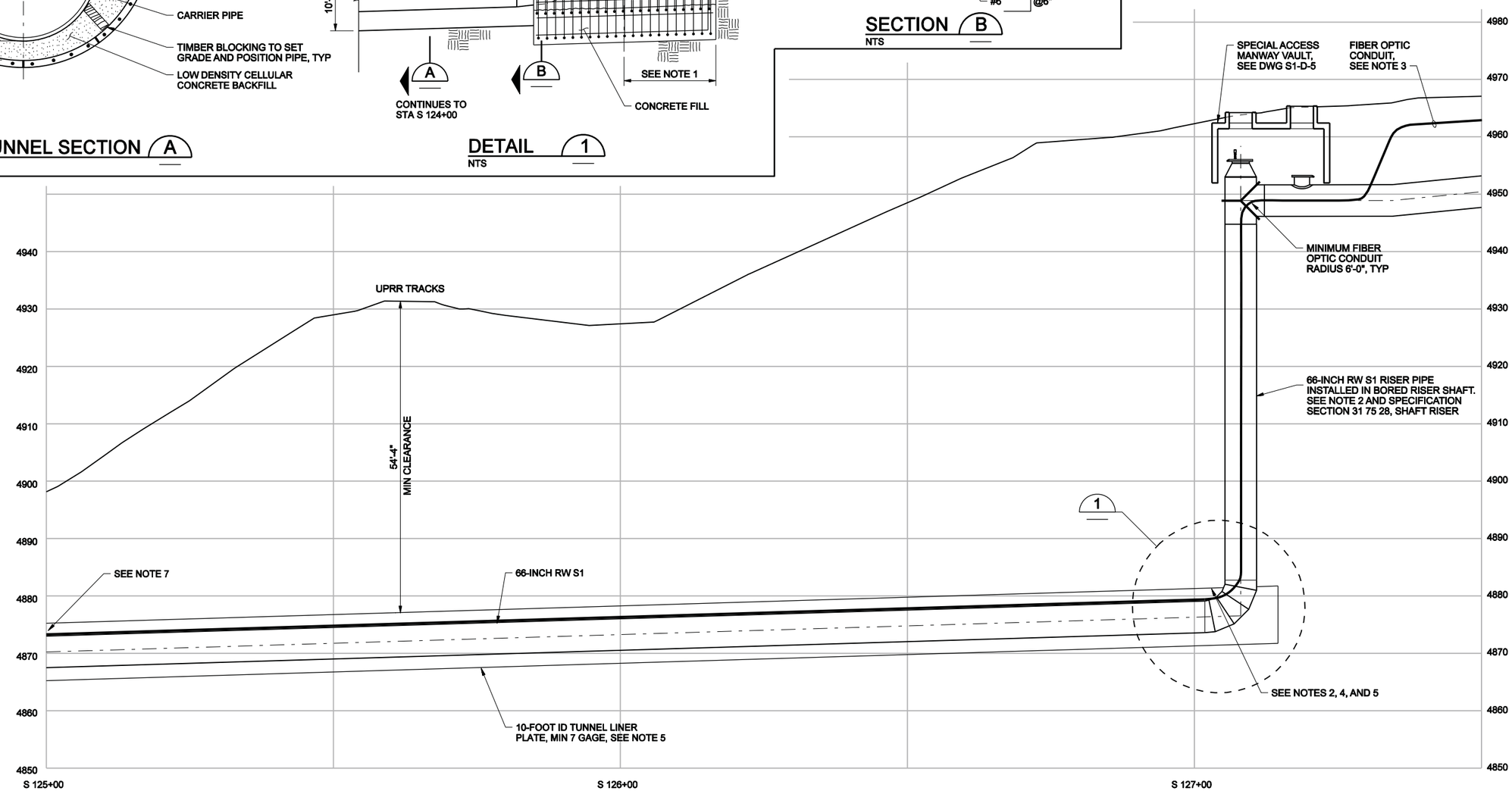

COLORADO REGISTERED PROFESSIONAL ENGINEER WILLIAM C. SHERMAN 15912 6/30/11

COLORADO LICENSED PROFESSIONAL ENGINEER JODY L. HENRY 39310 6/30/11

DSGN A FINNEY/H ROJAS						
DR B NORVILLE						
CHK SIMPSON/SHERMAN						
APVD J HENRY	NO.	DATE	REVISION	BY	APVD	

VERIFY SCALE
BAR IS ONE INCH ON ORIGINAL DRAWING.
0 1"
IF NOT ONE INCH ON THIS SHEET, ADJUST SCALES ACCORDINGLY.

CH2MHILL
Colorado Springs, CO 80903

SOUTHERN DELIVERY SYSTEM
RAW WATER PIPELINE
SOUTH SECTION ONE

PIPE DETAILS

PIPE CASING DETAILS

SHEET	33
DWG	S1-PD-1
DATE	JULY 2011
PROJ	171473.20.SP

Colorado Springs Utilities Project Number: SDS-002 CSU Work Order Number: 1146977

FILENAME: SP105nPD1d_171473.dgn PLOT DATE: 6/29/2011 PLOT TIME: 10:16:42 AM

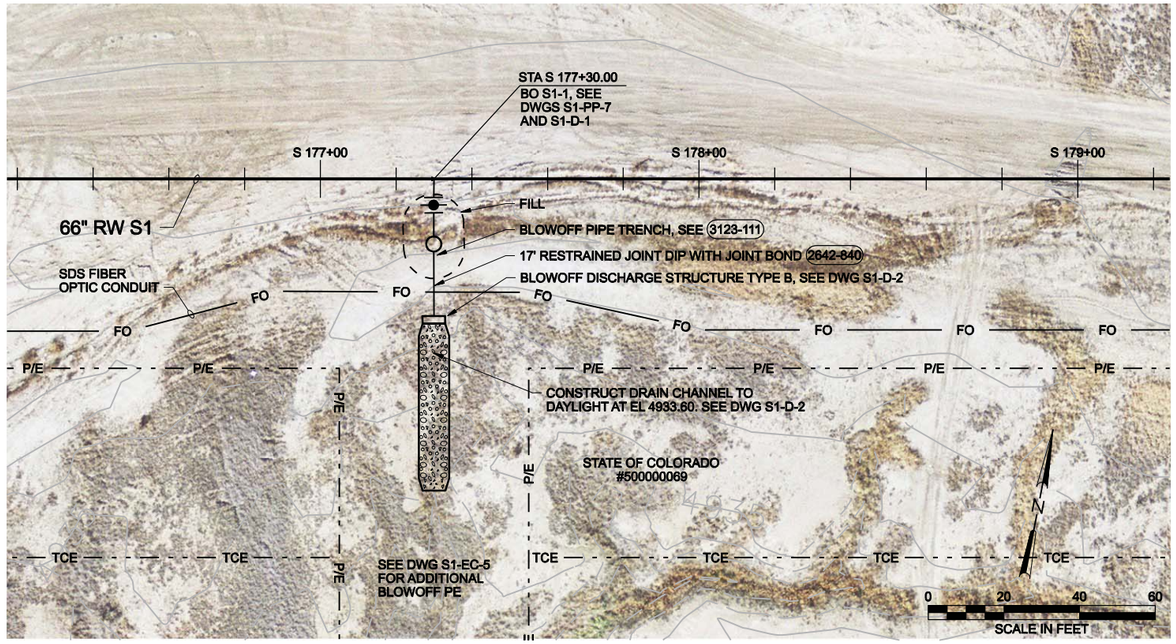

BLOWOFF S1-1 SITE PLAN

1"=20'

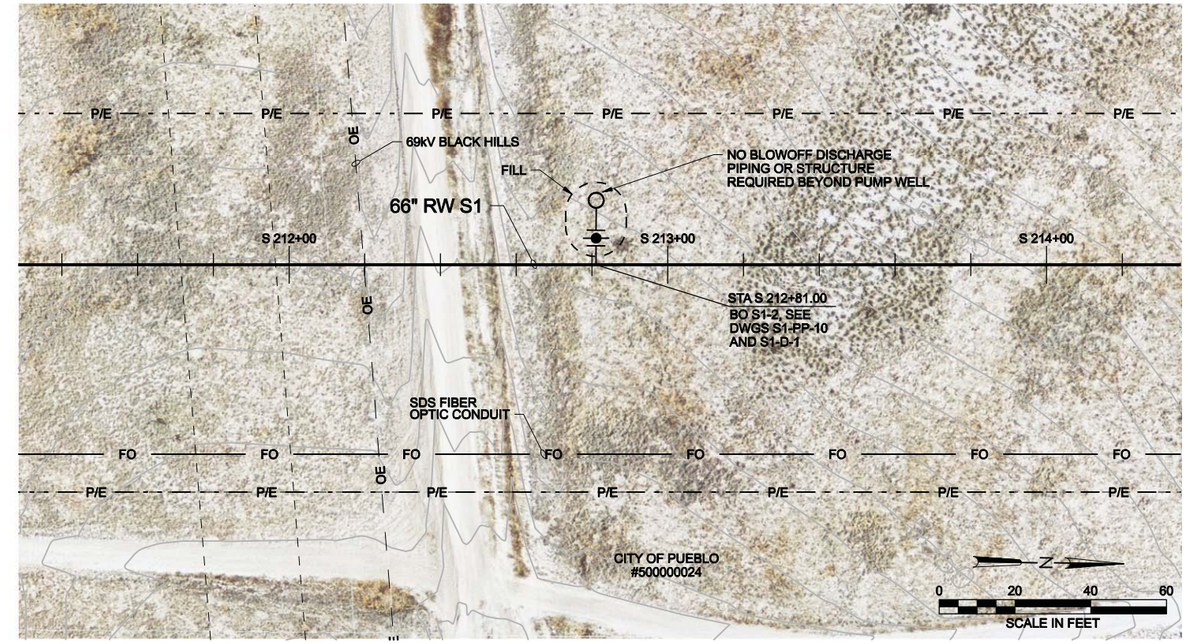

BLOWOFF S1-2 SITE PLAN

1"=20'

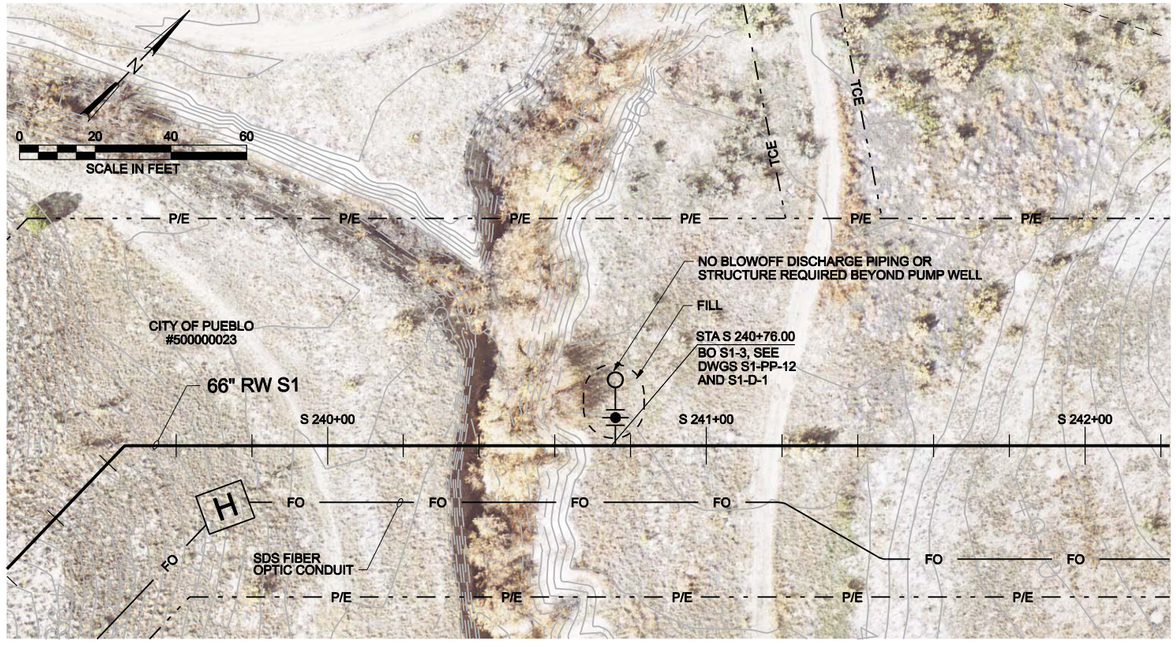

BLOWOFF S1-3 SITE PLAN

1"=20'

COLORADO LICENSED
GARY L. HENRY
39310
6/30/11
PROFESSIONAL ENGINEER

DSGN	E FORD					
DR	B NORVILLE					
CHK	G SIMPSON					
APVD	J HENRY	NO.	DATE	REVISION	BY	APVD

VERIFY SCALE
BAR IS ONE INCH ON ORIGINAL DRAWING.
0 1"
IF NOT ONE INCH ON THIS SHEET, ADJUST SCALES ACCORDINGLY.

CH2MHILL
Colorado Springs, CO 80903

SOUTHERN DELIVERY SYSTEM
RAW WATER PIPELINE
SOUTH SECTION ONE

APPURTENANCE PLANS AND DETAILS

BLOWOFF ASSEMBLY SITE PLANS
S1-1, S1-2, & S1-3

SHEET	34
DWG	S1-BP-1
DATE	JULY 2011
PROJ	171473.20.SP

Colorado Springs Utilities Project Number: SDS-002 CSU Work Order Number: 1146977

FILENAME: SP105nBP01d_171473.dgn PLOT DATE: 6/18/2011 PLOT TIME: 8:43:13 AM

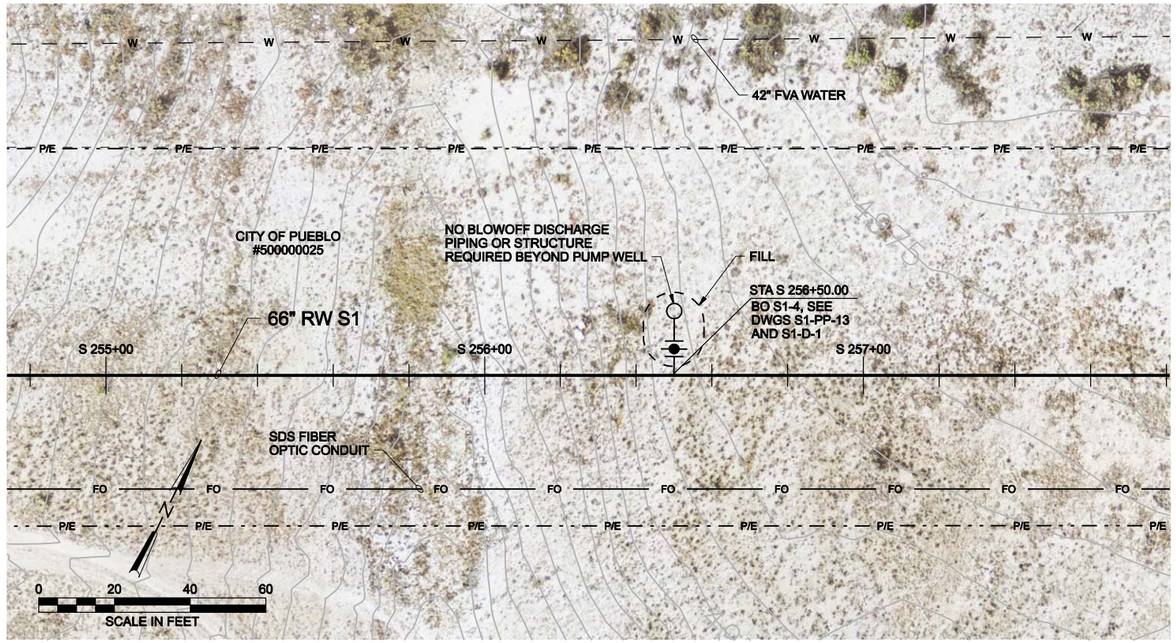

BLOWOFF S1-4 SITE PLAN

1"=20'

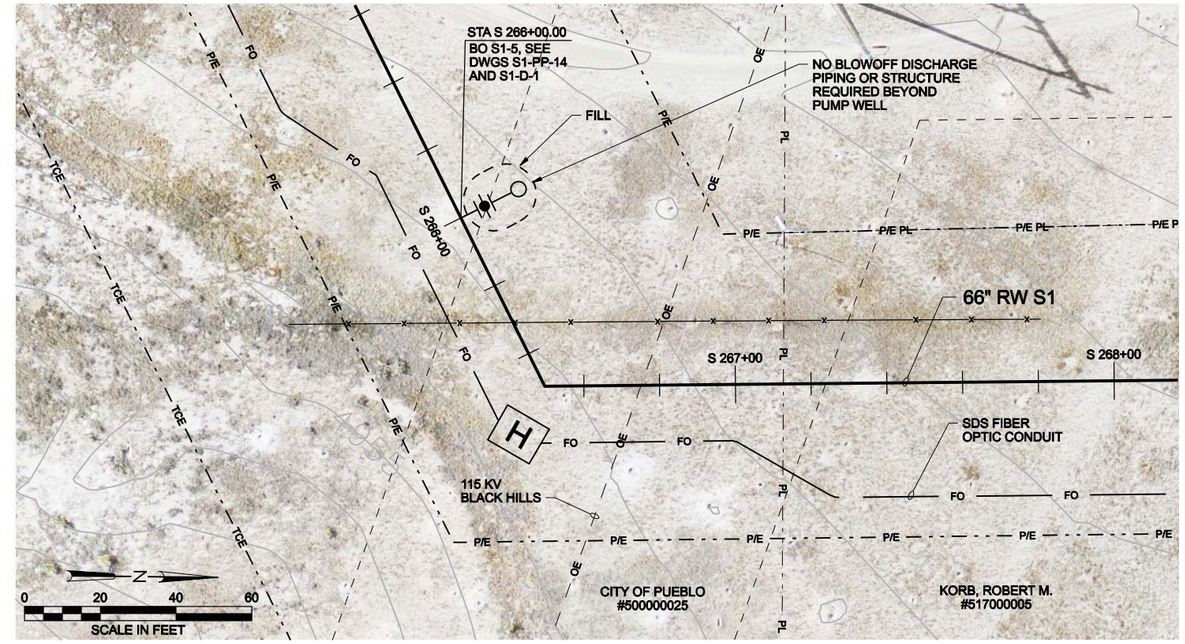

BLOWOFF S1-5 SITE PLAN

1"=20'

COLORADO LICENSED
GODY L. HENRY
39310
6/30/11
PROFESSIONAL ENGINEER

DSGN	E FORD				
DR	B NORVILLE				
CHK	G SIMPSON				
APVD	J HENRY	NO.	DATE	REVISION	BY	APVD

VERIFY SCALE
BAR IS ONE INCH ON ORIGINAL DRAWING.
0 1"
IF NOT ONE INCH ON THIS SHEET, ADJUST SCALES ACCORDINGLY.

CH2MHILL
Colorado Springs, CO 80903

SOUTHERN DELIVERY SYSTEM
RAW WATER PIPELINE
SOUTH SECTION ONE

APPURTENANCE PLANS AND DETAILS

BLOWOFF ASSEMBLY SITE PLANS
S1-4 AND S1-5

SHEET	35
DWG	S1-BP-2
DATE	JULY 2011
PROJ	171473.20.SP

Colorado Springs Utilities Project Number: SDS-002 CSU Work Order Number: 1146977

FILENAME: SP105nBP02d_171473.dgn PLOT DATE: 6/14/2011 PLOT TIME: 5:57:57 AM

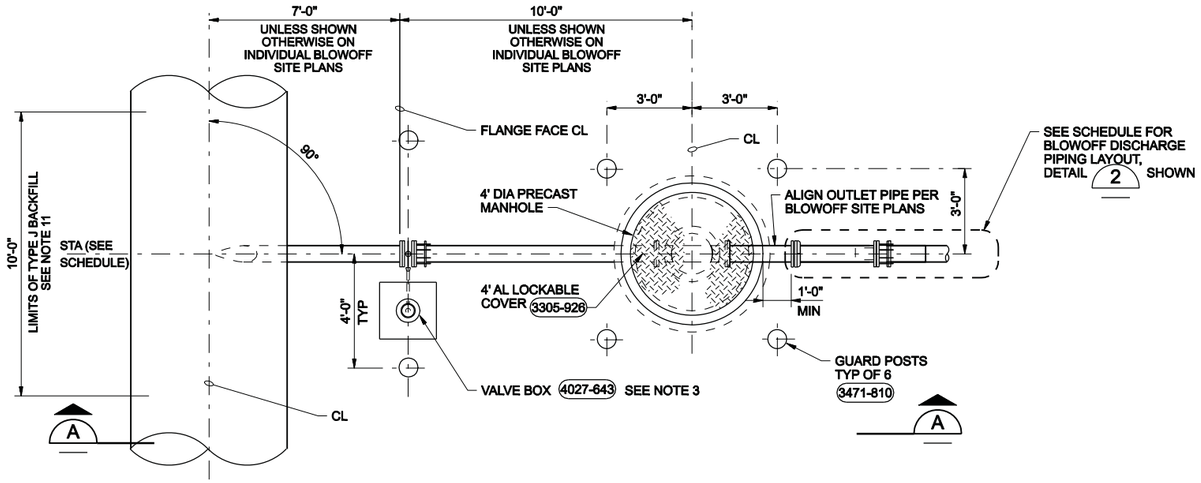

PLAN
3/8"=1'-0"

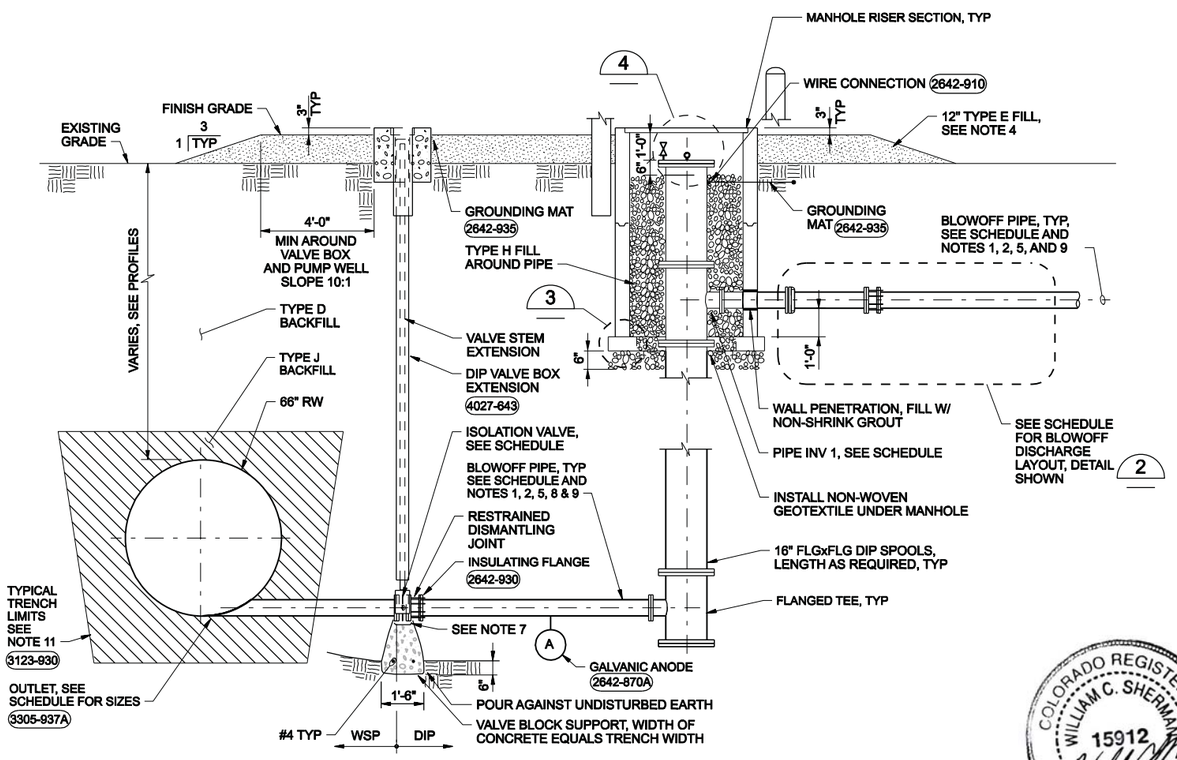

ELEVATION A
3/8"=1'-0"

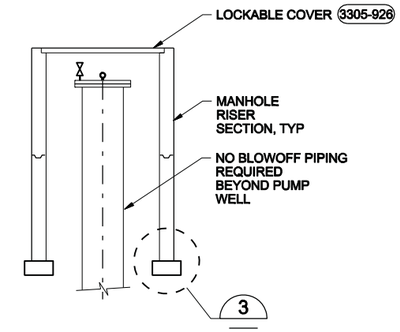

DETAIL 1
3/4"=1'-0"

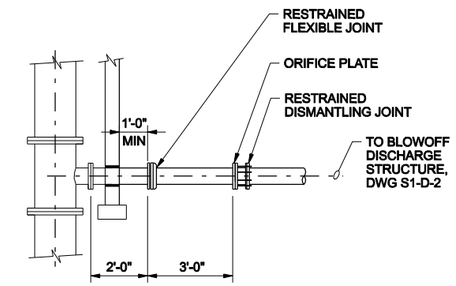

DETAIL 2
3/4"=1'-0"

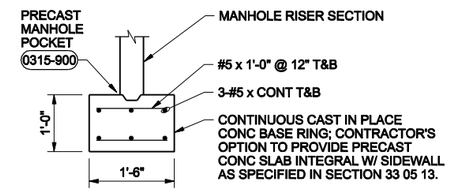

DETAIL 3
3/4"=1'-0"

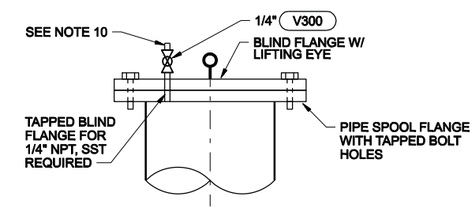

DETAIL 4
3/4"=1'-0"

NOTES:

1. BLOWOFF PIPING IS DUCTILE IRON AND WELDED STEEL PIPE AS SHOWN.
2. INSTALL RESTRAINED JOINT PIPE.
3. LOCATE VALVE BOX CENTERED OVER VALVE OPERATOR STEM.
4. PROVIDE TYPE E FILL AS REQUIRED TO FINISH GRADE AS SHOWN.
5. PROVIDE TRENCH FOR BLOWOFF PIPING, 3123-111 SIM, UNLESS OTHERWISE SHOWN.
6. STRUCTURES MAY BE CAST-IN-PLACE DESIGN IN ACCORDANCE WITH THE DESIGN CRITERIA ON DWG S1-G-10. SUBMIT DESIGN FOR APPROVAL.
7. PLACE DOUBLE LAYER OF 6 MIL POLYETHYLENE BETWEEN CONC AND VALVE.
8. SLOPE BLOWOFF PIPING AT -0.1% FROM 66" RW TO PUMP WELL UNLESS SHOWN OTHERWISE.
9. COAT BURIED FLANGES, VALVES, AND BOLTS WITH WAX TAPE.
10. FURNISH ONE 500 PSI PRESSURE GAUGE PER BLOWOFF.
11. MAKE TRANSITION TO PIPE ZONE OF 0.7 OD OUTSIDE OF LIMITS SHOWN FOR APPURTENANCES.
12. VALVES ARE OWNER FURNISHED. COORDINATE WITH CONSTRUCTION MANAGER REGARDING TYPE, SIZE, AND QUANTITY OF EACH VALVE, AND FOR SCHEDULING PICK-UP OF VALVES AT OWNERS STORAGE FACILITY.

OPERATIONAL NOTES:

1. DO NOT OPEN BLIND FLANGES ON BLOWOFFS UNTIL SYSTEM IS DEPRESSURIZED WITH A GAUGE PRESSURE OF 0 PSIG.
2. DO NOT OPERATE ISOLATION VALVE ON BLOWOFF S1-1 UNTIL THE JUNIPER PUMP STATION BLOWOFF HAS COMPLETELY DRAINED.
3. DO NOT OPERATE BLOWOFF S1-2, S1-3, S1-4, AND S1-5 UNTIL BLOWOFF S2-1 HAS COMPLETELY DRAINED.

SCHEDULE

BLOWOFF NO.	STATION	HILLSIDE OUTLET DIA & BLOWOFF SIZE (INCHES)	DISCHARGE DETAIL TYPE	ISOLATION VALVE TYPE PROVIDED BY OWNER	ORIFICE PLATE OPENING SIZE (INCHES)	PIPE INV 1 ELEVATION	PIPE INV 2 ELEVATION (SEE S1-D-2)	FLANGE PRESSURE CLASS RATING (PSI)
S1-1	S 177+30	8	DETAIL 2	V640A	4.6	4933.7	4933.6	375
S1-2	S 212+81	6	DETAIL 1	V640A	NONE	NONE	NONE	325
S1-3	S 240+76	6	DETAIL 1	V640A	NONE	NONE	NONE	350
S1-4	S 256+50	6	DETAIL 1	V640A	NONE	NONE	NONE	350
S1-5	S 266+00	6	DETAIL 1	V640A	NONE	NONE	NONE	350

COLORADO REGISTERED PROFESSIONAL ENGINEER WILLIAM C. SHERMAN 15912 6/30/11

COLORADO LICENSED PROFESSIONAL ENGINEER JOHN L. HENRY 39310 6/30/11

DSGN	E FORD				
DR	B NORVILLE				
CHK	G SIMPSON				
APVD	J HENRY	NO.	DATE	REVISION	BY	APVD

VERIFY SCALE
BAR IS ONE INCH ON ORIGINAL DRAWING.
0 1"
IF NOT ONE INCH ON THIS SHEET, ADJUST SCALES ACCORDINGLY.

CH2MHILL
Colorado Springs, CO 80903

SOUTHERN DELIVERY SYSTEM
RAW WATER PIPELINE
SOUTH SECTION ONE

APPURTENANCE PLANS AND DETAILS

BLOWOFF ASSEMBLY TYPE II
PLAN AND ELEVATION

SHEET	36
DWG	S1-D-1
DATE	JULY 2011
PROJ	171473.20.SP

Colorado Springs Utilities Project Number: SDS-002 CSU Work Order Number: 1146977

FILENAME: SP105nBlowoff2d_171473.dgn PLOT DATE: 6/14/2011 PLOT TIME: 6:27:22 AM

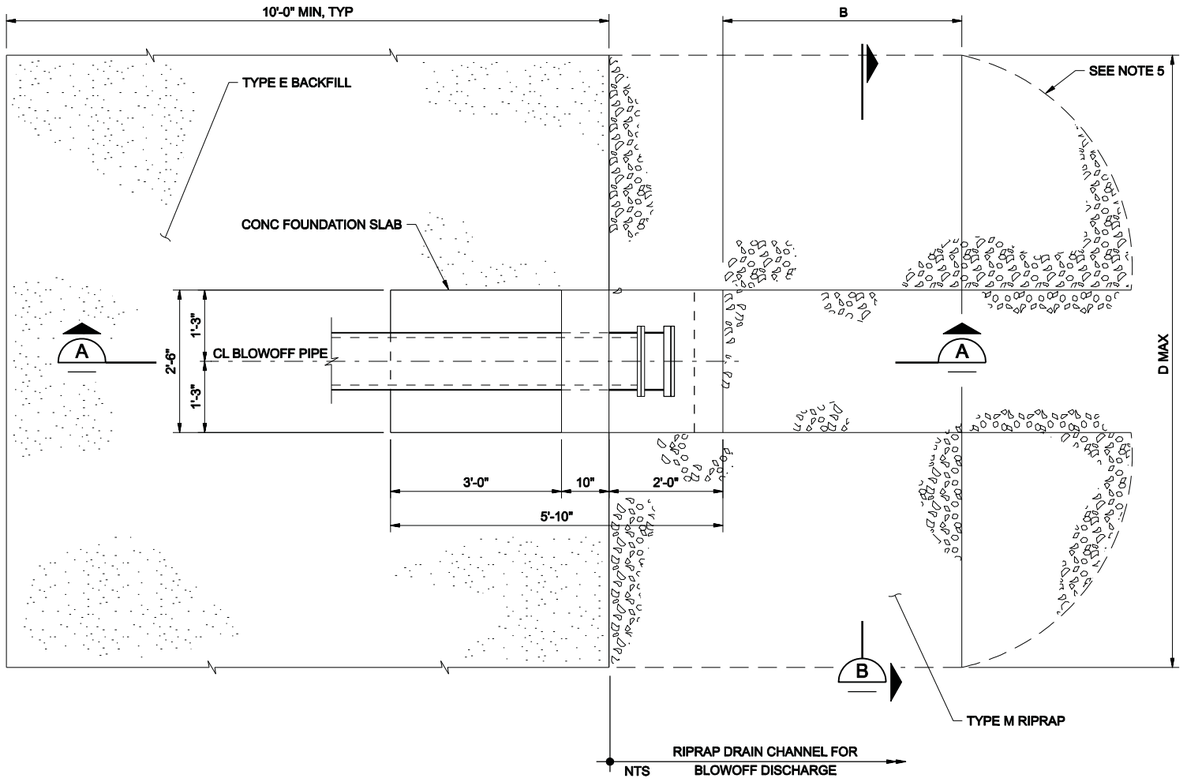

BLOWOFF DISCHARGE STRUCTURE TYPE B - PLAN

3/4"=1'-0"

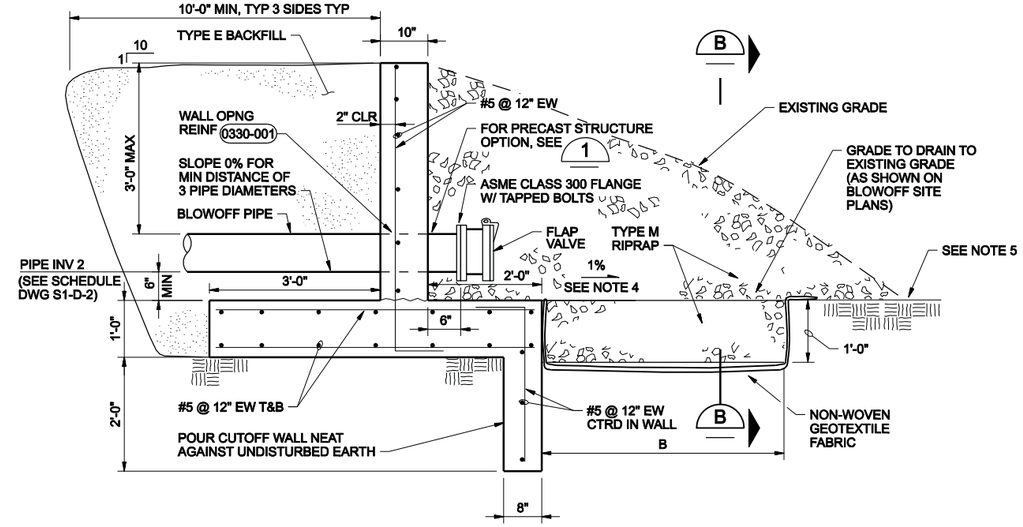

SECTION A

3/4"=1'-0"

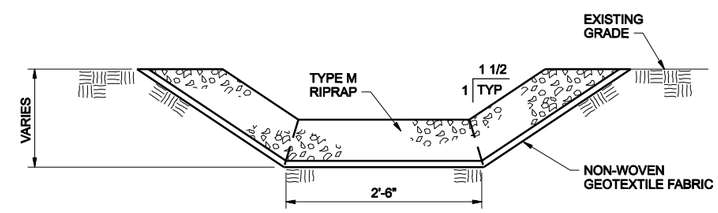

SECTION B

1/2"=1'-0"

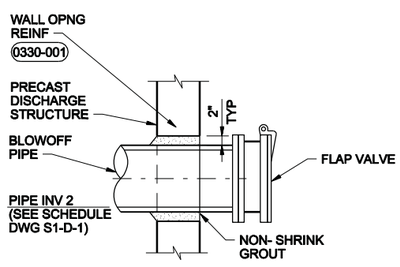

PRECAST STRUCTURE PIPE WALL
PENETRATION, SEE NOTE 3

DETAIL 1

3/4"=1'-0"

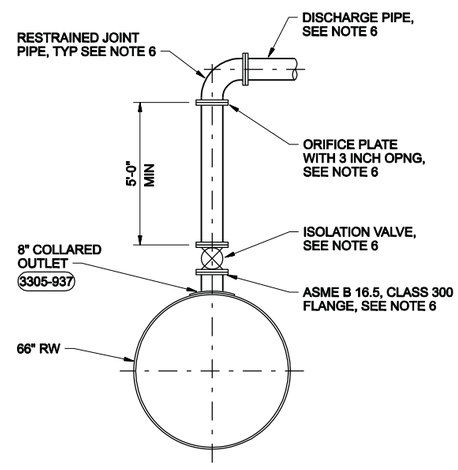

TEMPORARY BLOWOFF 2

NTS S1-PP-1

GENERAL NOTES:

1. SEE BLOWOFF ASSEMBLY SITE PLAN DRAWINGS FOR BLOWOFF CONFIGURATION AND ROUTING PLANS.
2. LENGTH OF TRAPEZOIDAL CHANNEL AND LENGTH OF APPROXIMATE GRADING ARE SHOWN ON BLOWOFF SITE PLANS.
3. STRUCTURES MAY BE PRECAST, AS SPECIFIED IN SECTION 33 05 13, MANHOLES AND PRECAST VAULTS.
4. DOWNSTREAM DRAIN CHANNEL MINIMUM SLOPE 1%.
5. EXTEND RIPRAP ON SIDE SLOPE OF TRAPEZOIDAL CHANNEL TO MATCH EXISTING GRADE
6. INSTALL TEMPORARY BLOWOFF ISOLATION VALVE, ORIFICE PLATE, DISCHARGE PIPING, AND BMP'S FOR DRAINING PIPELINE AFTER PASSING HYDROSTATIC TEST. ISOLATION VALVE TO BE RATED FOR HYDROSTATIC TEST PRESSURE. PIPING DOWNSTREAM OF ISOLATION VALVE AND ORIFICE PLATE TO BE RATED FOR 150 PSI. DISCHARGE POINT TO BE A MINIMUM OF 25 FT FROM MAIN PIPELINE. AFTER DRAINING PIPELINE, REMOVE BLOWOFF PIPING AND INSTALL AN ASME B16.5, CLASS 300 BLIND FLANGE ON 8" OUTLET.

DIMENSIONS OF BLOW-OFF DISCHARGE STRUCTURES

SCHEDULE				
BLOWOFF NO.	DISCHARGE STRUCTURE	BO PIPE DIAMETER (INCHES)	D MAX	B
S1-1	TYPE B	8	10'-5"	44'-0"

COLORADO REGISTERED PROFESSIONAL ENGINEER WILLIAM C. SHERMAN 15912

COLORADO LICENSED PROFESSIONAL ENGINEER GODY L. HENRY 39310 6/30/11

DSGN	E FORD					
DR	B NORVILLE					
CHK	G SIMPSON					
APVD	J HENRY	NO.	DATE	REVISION	BY	APVD

VERIFY SCALE
BAR IS ONE INCH ON ORIGINAL DRAWING.
0 1"
IF NOT ONE INCH ON THIS SHEET, ADJUST SCALES ACCORDINGLY.

CH2MHILL
Colorado Springs, CO 80903

SOUTHERN DELIVERY SYSTEM
RAW WATER PIPELINE
SOUTH SECTION ONE

APPURTENANCE PLANS AND DETAILS
BLOWOFF ASSEMBLY - TYPE B
DISCHARGE STRUCTURE - PLAN AND
SECTIONS AND TEMPORARY BLOWOFF

SHEET	37
DWG	S1-D-2
DATE	JULY 2011
PROJ	171473.20.SP

Colorado Springs Utilities Project Number: SDS-002 CSU Work Order Number: 1146977

FILENAME: SP105nBD01d_171473.dgn PLOT DATE: 6/14/2011 PLOT TIME: 6:19:51 AM

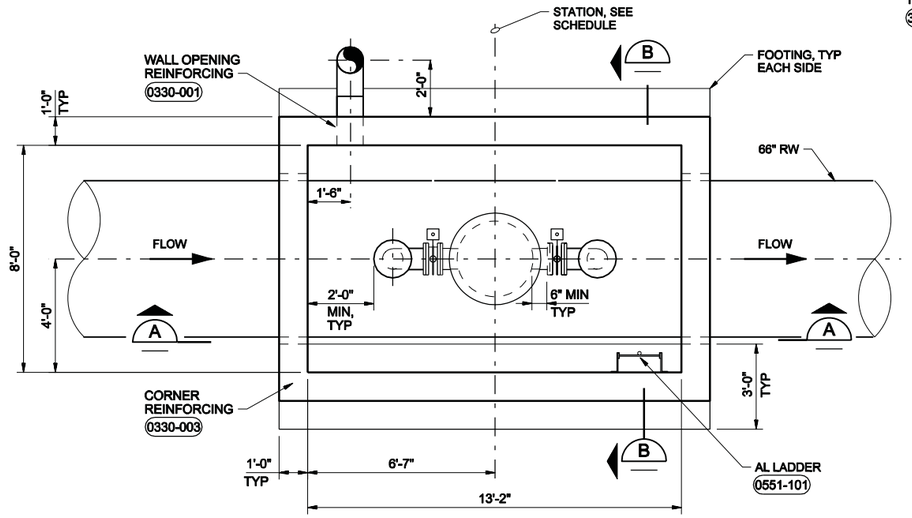

PLAN
3/8"=1'-0"

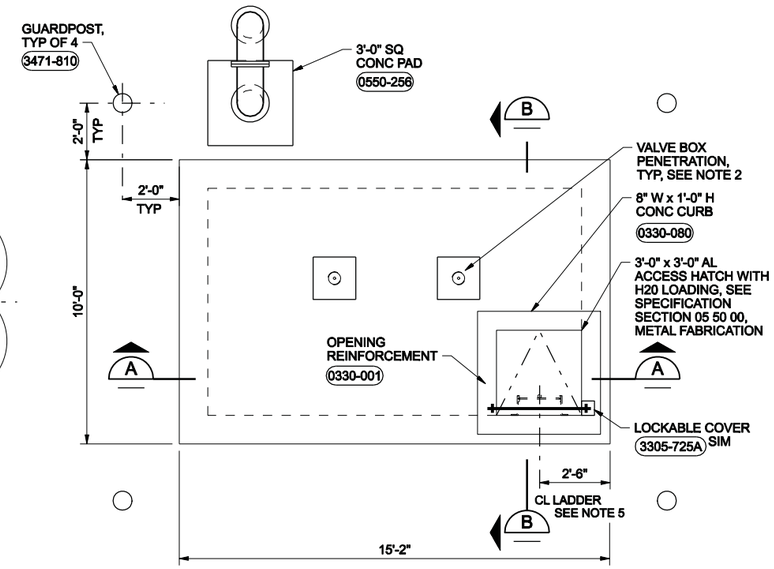

ROOF PLAN
3/8"=1'-0"

NOTES:

1. SEE GENERAL STRUCTURAL NOTES ON DWG S1-G-10.
2. LOCATE VALVE BOX PENETRATIONS CENTERED OVER VALVE OPERATOR STEM. COORDINATE PENETRATIONS WITH VALVE STEM LOCATION.
3. SEE PLAN AND PROFILE DRAWINGS FOR PIPE CENTERLINE ELEVATION, AND EXISTING GRADE.
4. STRUCTURES MAY BE PRECAST AS SPECIFIED IN SECTION 33 05 13, MANHOLES AND PRECAST VAULTS.
5. CENTER LADDER IN HATCH OPENING.
6. TRANSITION TO PIPE ZONE OF 0.7 D OUTSIDE OF LIMITS SHOWN FOR APPURTENANCE.
7. VALVES ARE OWNER FURNISHED. COORDINATE WITH CONSTRUCTION MANAGER REGARDING TYPE, SIZE, AND QUANTITY OF EACH VALVE, AND FOR SCHEDULING PICK-UP OF VALVES AT OWNER'S STORAGE FACILITY.

SCHEDULE

CARV NO.	STATION	CARV SIZE (INCHES)	FLANGE PRESSURE CLASS RATING (PSI)	ISOLATION VALVE TYPE PROVIDED BY OWNER	VENT STYLE
S1-4	S 243+08	8	350	V506A	Type 1
S1-5	S 259+80	8	350	V506A	Type 1
S1-6	S 292+12	6	350	V506A	Type 1

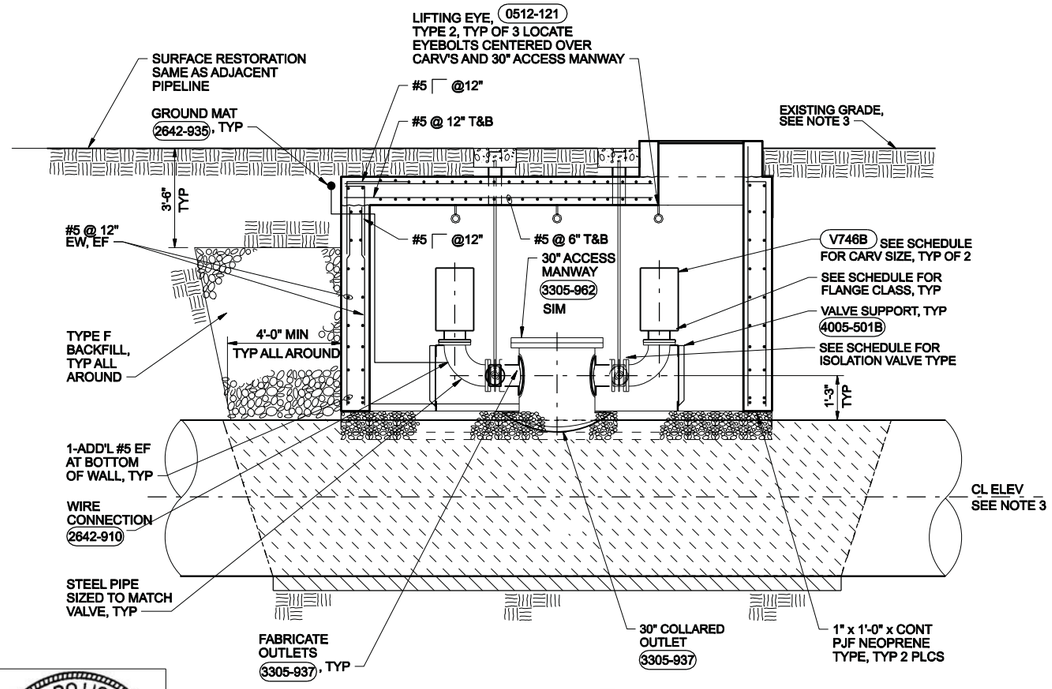

SECTION A
3/8"=1'-0"

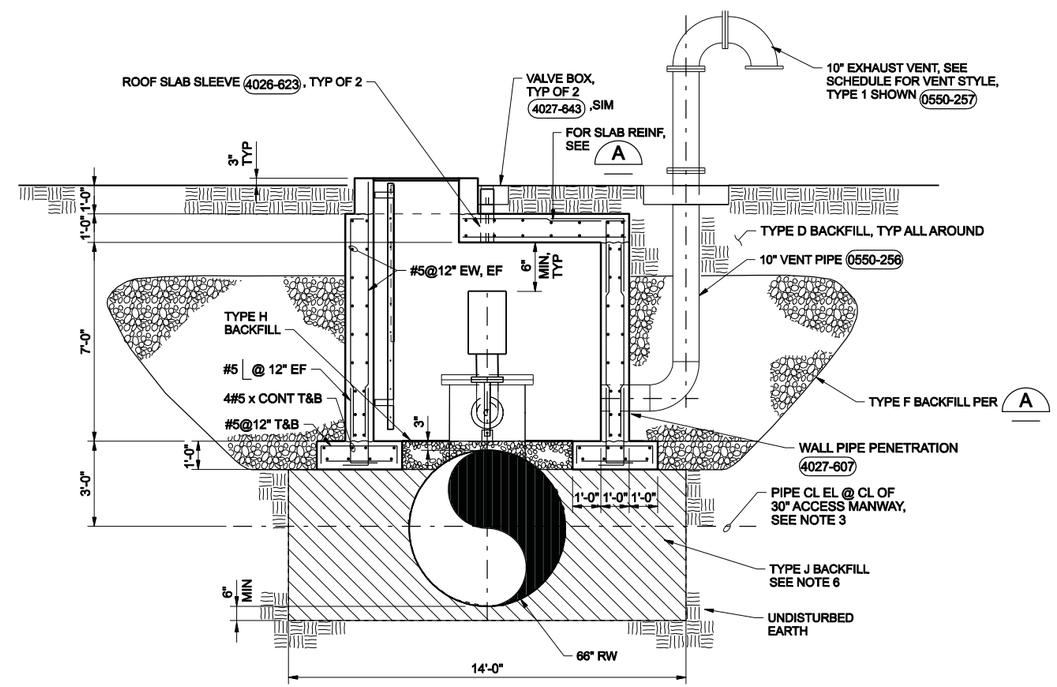

SECTION B
3/8"=1'-0"

COLORADO LICENSED CODY L. HENRY 39310 6/30/11 PROFESSIONAL ENGINEER

COLORADO REGISTERED WILLIAM C. SHERMAN 15912 PROFESSIONAL ENGINEER 6/30/11

DSGN	E FORD/H ROJAS				
DR	B NORVILLE				
CHK	SIMPSON/SHERMAN				
APVD	J HENRY	NO.	DATE	REVISION	BY	APVD

VERIFY SCALE
BAR IS ONE INCH ON ORIGINAL DRAWING.
0 1"
IF NOT ONE INCH ON THIS SHEET, ADJUST SCALES ACCORDINGLY.

CH2MHILL
Colorado Springs, CO 80903

SOUTHERN DELIVERY SYSTEM
RAW WATER PIPELINE
SOUTH SECTION ONE

APPURTENANCE PLANS AND DETAILS

CARV VAULT TYPE I
PLAN AND SECTIONS

SHEET	38
DWG	S1-D-3
DATE	JULY 2011
PROJ	171473.20.SP

Colorado Springs Utilities Project Number: SDS-002 CSU Work Order Number: 1146977

FILENAME: SP105nCARV1d_171473.dgrPLOT DATE: 6/29/2011 PLOT TIME: 10:51:27 AM

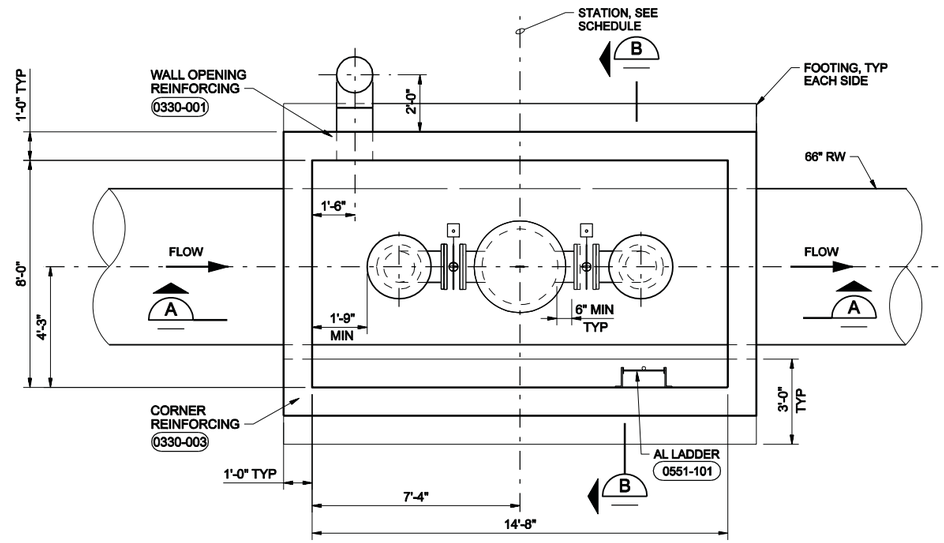

PLAN
3/8"=1'-0"

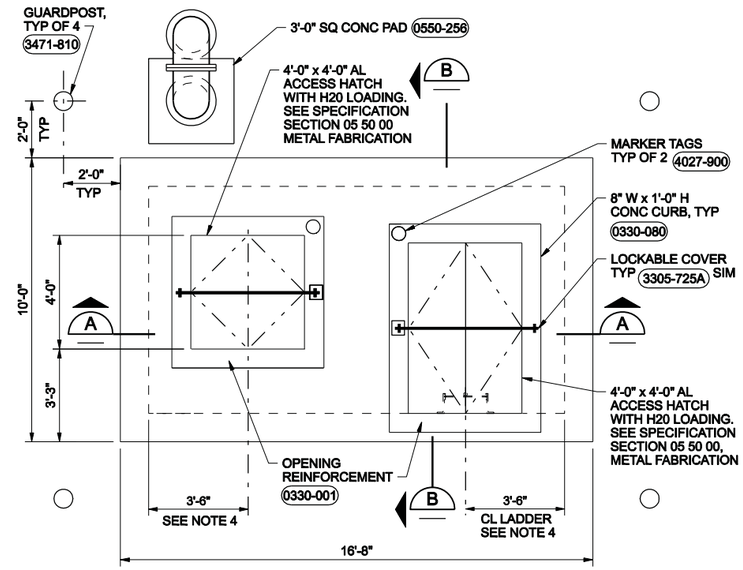

ROOF PLAN
3/8"=1'-0"

NOTES:

1. SEE GENERAL STRUCTURAL NOTES ON DWG S1-G-10.
2. SEE PLAN AND PROFILE DRAWINGS FOR PIPE CENTERLINE ELEVATION, EXISTING GRADE, AND FINISHED GRADE.
3. STRUCTURES MAY BE PRECAST AS SPECIFIED IN SECTION 33 05 13, MANHOLES AND PRECAST VAULTS.
4. LOCATE ACCESS HATCHES TO ALLOW FOR ISOLATION VALVES TO BE OPERATED FROM ABOVE. COORDINATE OPENINGS PRIOR TO INSTALLATION, CENTER LADDER IN HATCH OPENING.
5. TRANSITION TO PIPE ZONE OF 0.7D OUTSIDE OF LIMITS SHOWN FOR APPURTENANCE.
6. LOCATE ACCESS HATCHES CENTERED OVER V746A COORDINATE OPENINGS PRIOR TO INSTALLATION.
7. VALVES ARE OWNER FURNISHED. COORDINATE WITH CONSTRUCTION MANAGER REGARDING TYPE, SIZE, AND QUANTITY OF EACH VALVE, AND FOR SCHEDULING PICK-UP OF VALVES AT OWNER'S STORAGE FACILITY.

SCHEDULE

CARV NO.	STATION	CARV SIZE (INCHES)	FLANGE PRESSURE CLASS RATING (PSI)	ISOLATION VALVE TYPE PROVIDED BY OWNER	VENT STYLE
S1-1	S 136+37	12	350	V506A	Type 1
S1-2	S 209+85	12	325	V506A	Type 1
S1-3	S 220+16	12	325	V506A	Type 1

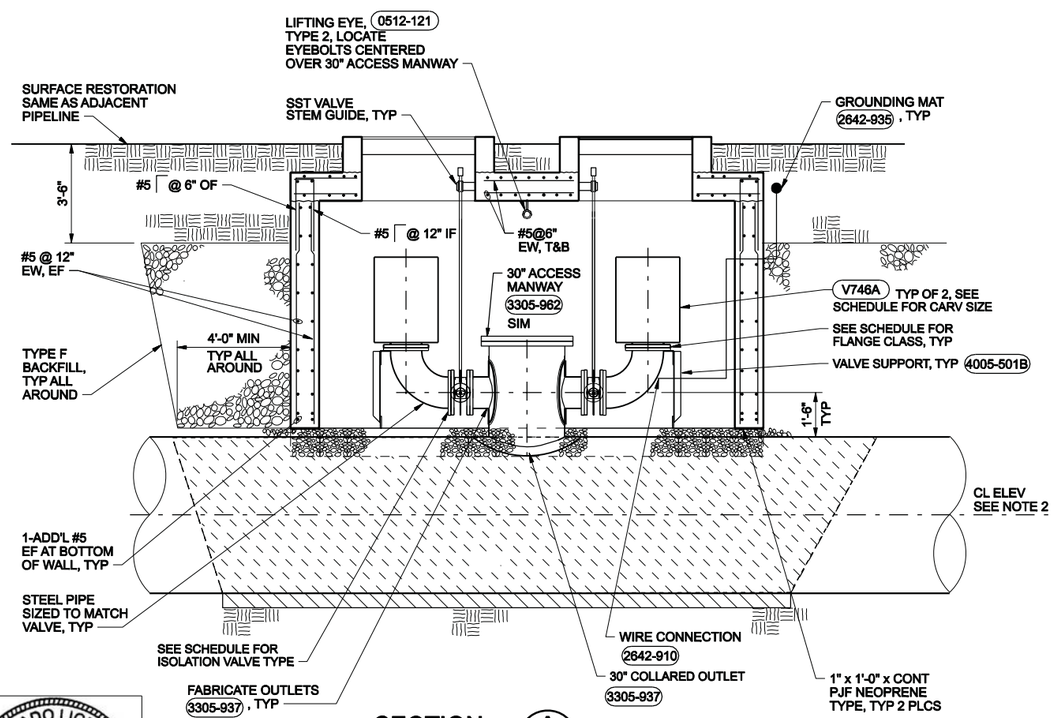

SECTION A
3/8"=1'-0"

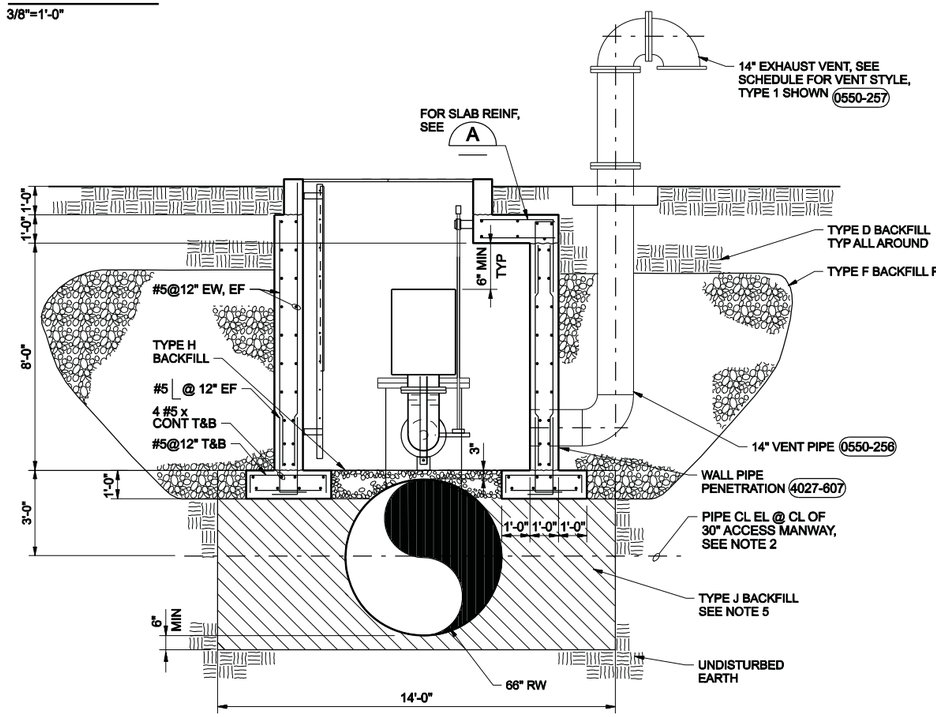

SECTION B
3/8"=1'-0"

COLORADO LICENSED JODY L. HENRY 39310 6/30/11 PROFESSIONAL ENGINEER

COLORADO REGISTERED WILLIAM C. SHERMAN 15912 PROFESSIONAL ENGINEER 6/30/11

DSGN	E FORD/H ROJAS				
DR	B NORVILLE				
CHK	SIMPSON/SHERMAN				
APVD	J HENRY	NO.	DATE	REVISION	BY	APVD

VERIFY SCALE
BAR IS ONE INCH ON ORIGINAL DRAWING.
0 1"
IF NOT ONE INCH ON THIS SHEET, ADJUST SCALES ACCORDINGLY.

CH2MHILL
Colorado Springs, CO 80903

SOUTHERN DELIVERY SYSTEM
RAW WATER PIPELINE
SOUTH SECTION ONE

APPURTENANCE PLANS AND DETAILS

CARV VAULT TYPE II
PLANS AND SECTIONS

SHEET	39
DWG	S1-D-4
DATE	JULY 2011
PROJ	171473.20.SP

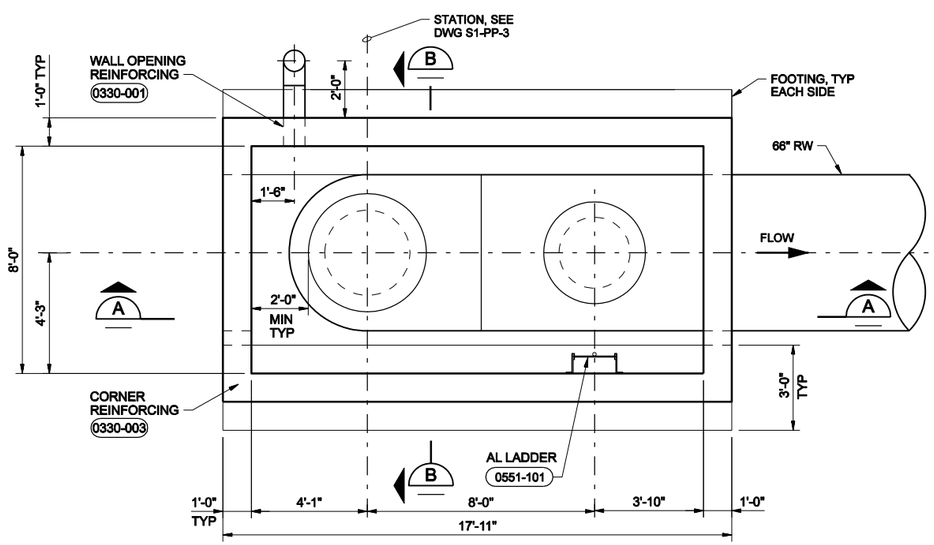

PLAN
3/8"=1'-0"

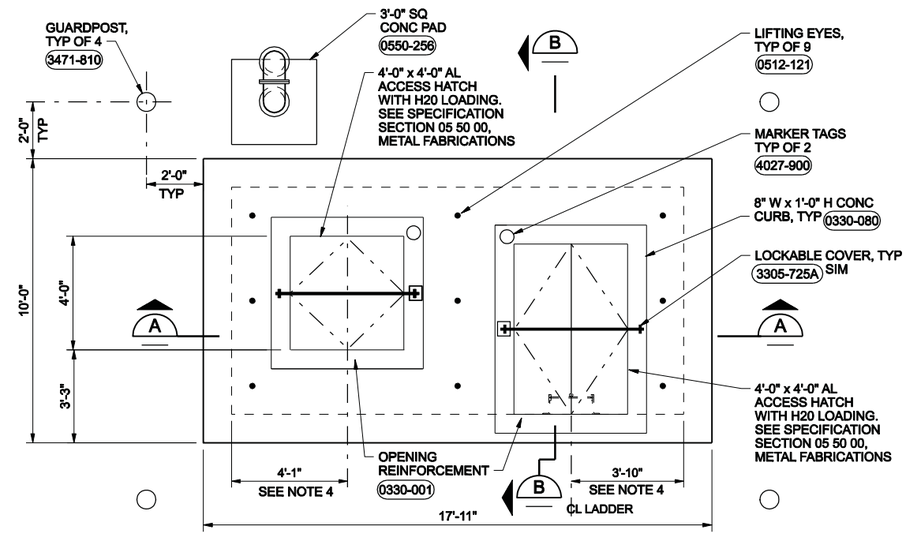

NOTES:

1. SEE GENERAL STRUCTURAL NOTES ON DWG S1-G-10.
2. SEE PLAN AND PROFILE DRAWINGS FOR PIPE CENTERLINE ELEVATION, EXISTING GRADE, AND FINISHED GRADE.
3. STRUCTURES MAY BE PRECAST AS SPECIFIED IN SECTION 33 05 13, MANHOLES AND PRECAST VAULTS.
4. LOCATE ACCESS HATCHES CENTERED OVER ACCESS MANWAYS. COORDINATE OPENINGS PRIOR TO INSTALLATION. CENTER LADDERS IN HATCH OPENINGS.
5. TRANSITION TO PIPE ZONE OF 0.7 D OUTSIDE OF LIMITS SHOWN FOR APPURTENANCES.

ROOF PLAN
3/8"=1'-0"

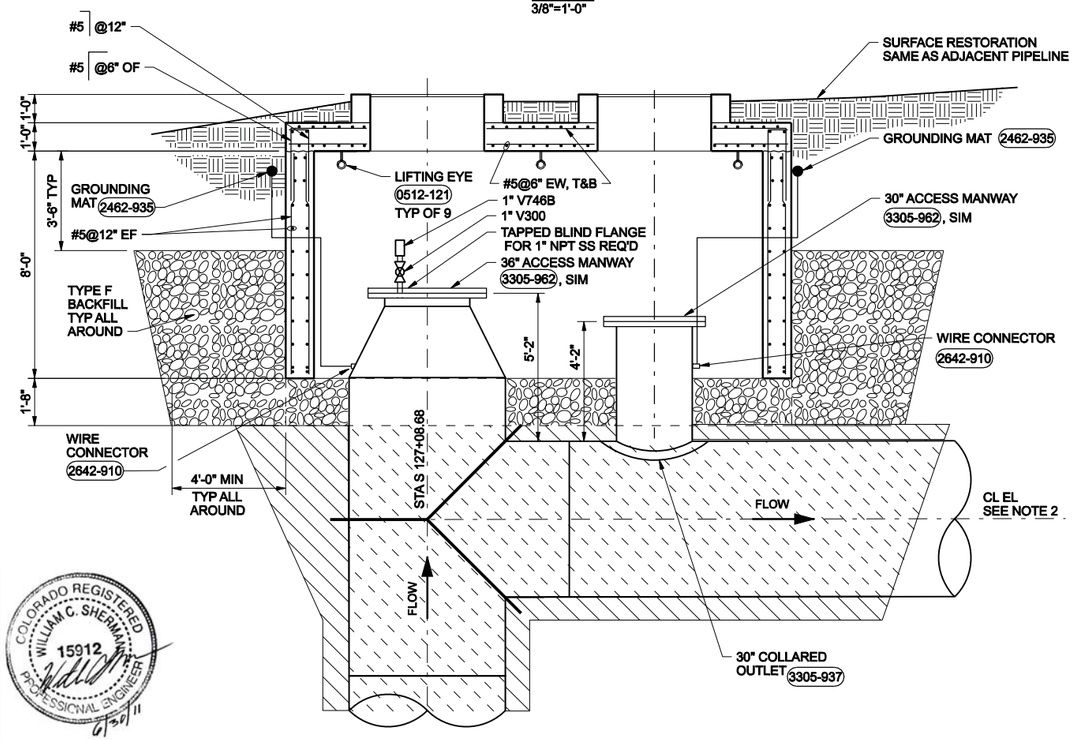

SECTION A
3/8"=1'-0"

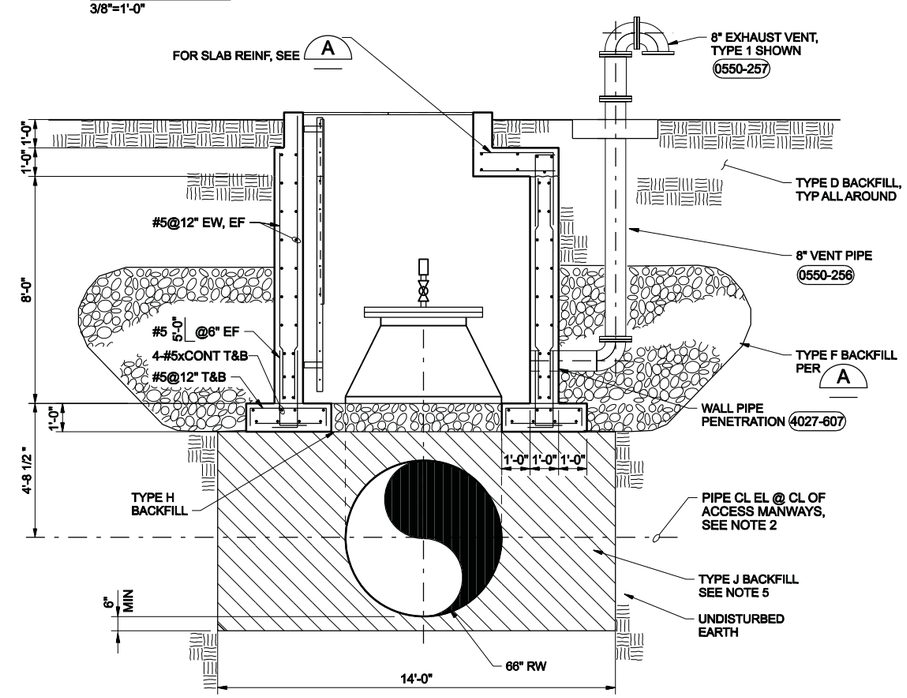

SECTION B
3/8"=1'-0"

COLORADO REGISTERED WILLIAM C. SHERMAN 15912 PROFESSIONAL ENGINEER 6/30/11

COLORADO LICENSED CODY L. HENRY 39310 PROFESSIONAL ENGINEER 6/30/11

DSGN E FORD/H ROJAS						
DR B NORVILLE						
CHK SIMPSON/SHERMAN						
APVD J HENRY	NO.	DATE	REVISION	BY	APVD	

VERIFY SCALE
BAR IS ONE INCH ON ORIGINAL DRAWING.
0 1"
IF NOT ONE INCH ON THIS SHEET, ADJUST SCALES ACCORDINGLY.

CH2MHILL
Colorado Springs, CO 80903

SOUTHERN DELIVERY SYSTEM
RAW WATER PIPELINE
SOUTH SECTION ONE

APPURTENANCE PLANS AND DETAILS

SPECIAL ACCESS MANWAY VAULT PLANS AND SECTIONS

SHEET	40
DWG	S1-D-5
DATE	JULY 2011
PROJ	171473.20.SP

Colorado Springs Utilities Project Number: SDS-002 CSU Work Order Number: 1146977

FILENAME: SP105nCARV3d_171473.dgrPLOT DATE: 6/29/2011 PLOT TIME: 10:55:01 AM

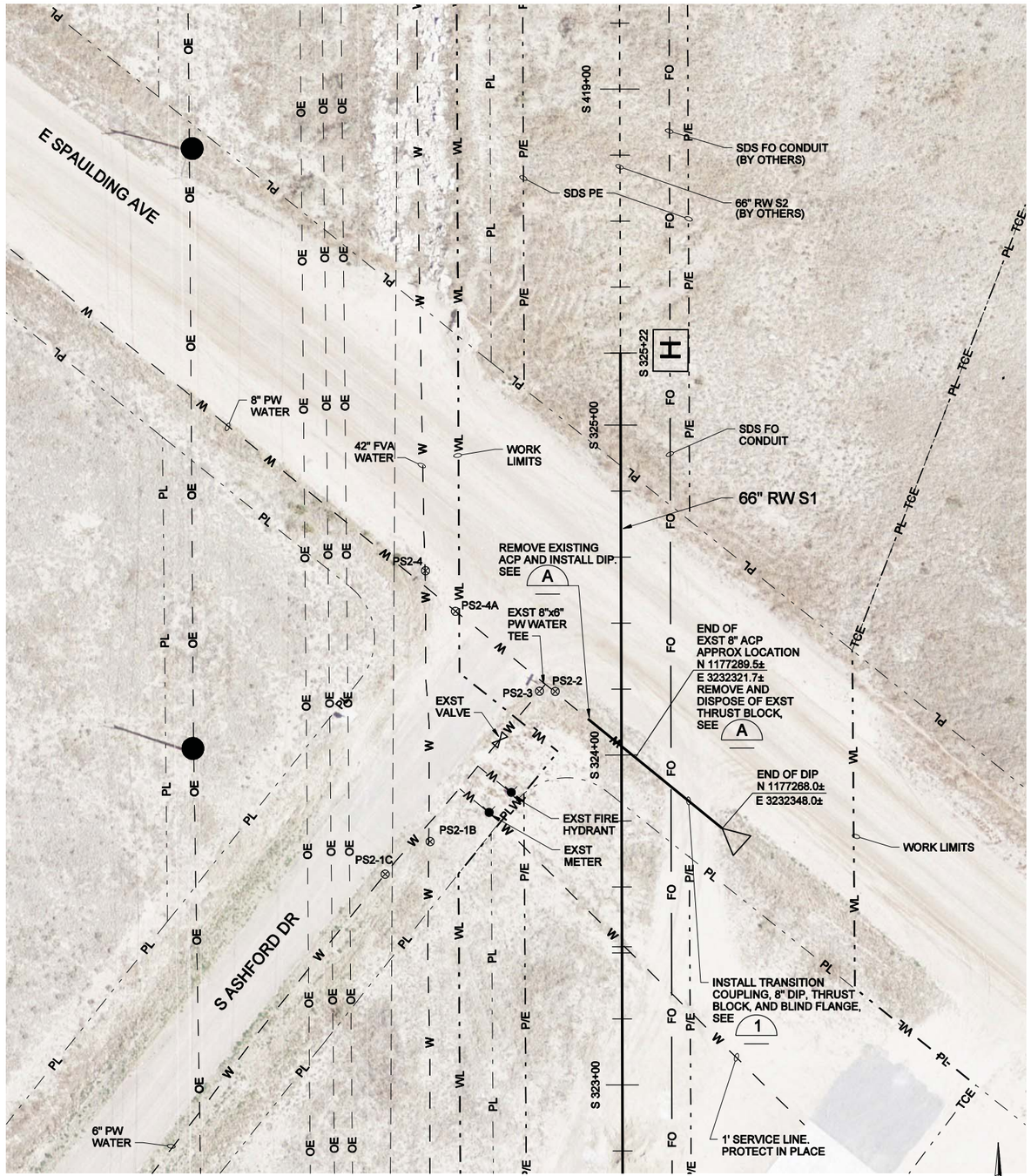

ASBESTOS-CEMENT PIPELINE REPLACEMENT AT S. ASHFORD DRIVE AND E. SPAULDING AVENUE

1"=20'

0 20 40 60
SCALE IN FEET

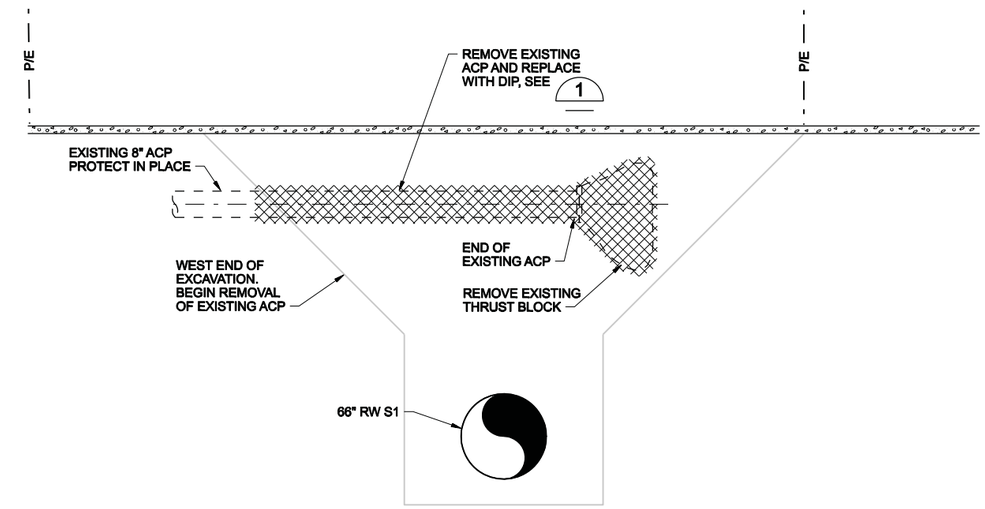

ASBESTOS-CEMENT PIPELINE REPLACEMENT TRENCH SECTION (A)

NTS

NOTES:

1. PRIOR TO EXCAVATION FOR THE ACP, EXISTING PUEBLO WEST METROPOLITAN DISTRICT PIPELINES IMPACTING ON THE WORK MUST BE SHUTDOWN. PUEBLO WEST METROPOLITAN DISTRICT SHALL BE RESPONSIBLE FOR SHUTDOWN. COORDINATE WITH PUEBLO WEST METROPOLITAN DISTRICT.
2. INSTALL TEMPORARY ABOVE GROUND CONNECTION BETWEEN FIRE HYDRANTS ON THE SOUTH END OF S. ASHFORD DRIVE AND THE SOUTH END OF S. MERIWEATHER DRIVE AS SHOWN ON DWG S1-G-5. COORDINATE WITH PUEBLO WEST DESIGN APPROVAL PRIOR TO INSTALLATION. SEE SPECIFICATION SECTION 01 31 13, PROJECT COORDINATION.
3. DRAIN 8" PW WATER ASBESTOS-CEMENT PIPELINE PRIOR TO REMOVAL.
4. JUST PRIOR TO TRENCHING AND INSTALLATION OF 66" RW S1 PIPELINE, REMOVE AND DISPOSE OF ASBESTOS-CEMENT PIPE AND THRUST BLOCK AS SHOWN ON THE PLAN VIEW AND SECTION A IN ACCORDANCE WITH SPECIFICATION SECTION 02 41 00, DEMOLITION OF STRUCTURES AND REMOVAL OR CROSSING OF ASBESTOS CEMENT PIPE. DEWATER AND DEPRESSURIZE ASBESTOS- CEMENT PIPELINES PRIOR TO REMOVAL. REMOVE AND DISPOSE OF EXISTING THRUST BLOCK IN ACCORDANCE WITH SPECIFICATION SECTION 02 41 00, DEMOLITION OF STRUCTURES AND REMOVAL OR CROSSING OF ASBESTOS CEMENT PIPE.
5. AFTER INSTALLATION OF THE 66" RW S1 PIPELINE, BACKFILL UP TO INVERT OF PUEBLO WEST METROPOLITAN DISTRICT PIPELINE. INSTALL DIP EXTENSION, SEE PLAN VIEW (1). ONCE DIP IS INSTALLED, DISINFECT PER CDPHE AND PUEBLO WEST METROPOLITAN DISTRICT REQUIREMENTS.
6. INSTALL CONCRETE THRUST BLOCK WITH 64 SF BEARING SURFACE AGAINST UNDISTURBED SOIL. CONCRETE MATERIAL SHALL BE IN ACCORDANCE WITH SPECIFICATION SECTION 03 30 10, STRUCTURAL REINFORCED CONCRETE.
7. INSTALL TYPE J (CLSM) TO 6" ABOVE TOP OF PIPE.
8. PROVIDE REPLACEMENT PLAN FOR PUEBLO WEST ACP REPLACEMENT TO CONSTRUCTION MANAGER. SEE SPECIFICATION SECTION 01 31 13, PROJECT COORDINATION.

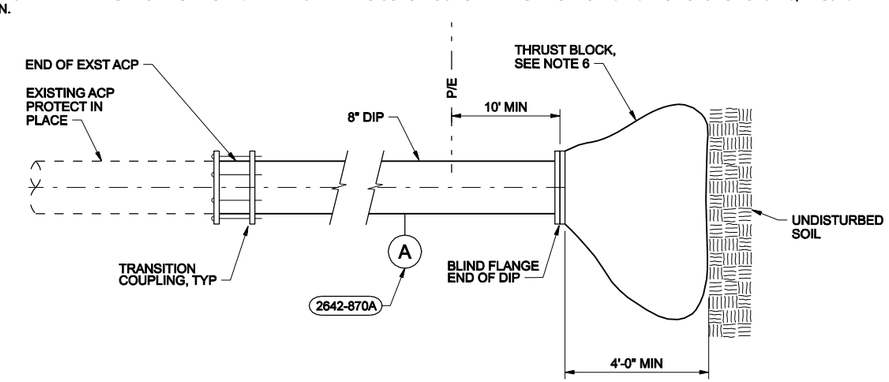

DIP EXTENSION DETAIL (1)

NTS

COLORADO LICENSED PROFESSIONAL ENGINEER GODY L. HENRY 39310 6/30/11

DSGN	T MATSUURA
DR	B NORVILLE
CHK	G SIMPSON
APVD	J HENRY

NO.	DATE	REVISION	BY	APVD

VERIFY SCALE
BAR IS ONE INCH ON ORIGINAL DRAWING.
0 1"
IF NOT ONE INCH ON THIS SHEET, ADJUST SCALES ACCORDINGLY.

CH2MHILL
Colorado Springs, CO 80903

SOUTHERN DELIVERY SYSTEM
RAW WATER PIPELINE
SOUTH SECTION ONE

UTILITY RELOCATION
PUEBLO WEST
ASBESTOS CEMENT PIPELINE
REPLACEMENT DETAILS

SHEET	41
DWG	S1-U-1
DATE	JULY 2011
PROJ	171473.20.SP

Colorado Springs Utilities Project Number: SDS-002 CSU Work Order Number: 1146977

FILENAME: SP105nUR1d_171473.dgn PLOT DATE: 6/29/2011 PLOT TIME: 10:57:29 AM

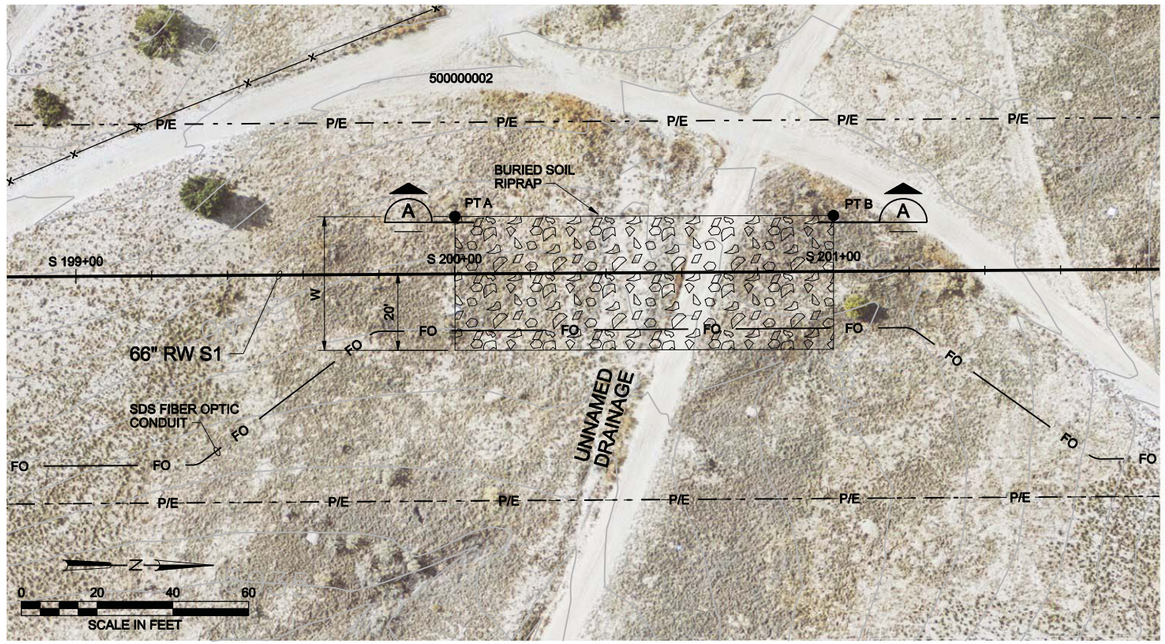

UNNAMED DRAINAGE STA S 200+00 TO STA S 201+00

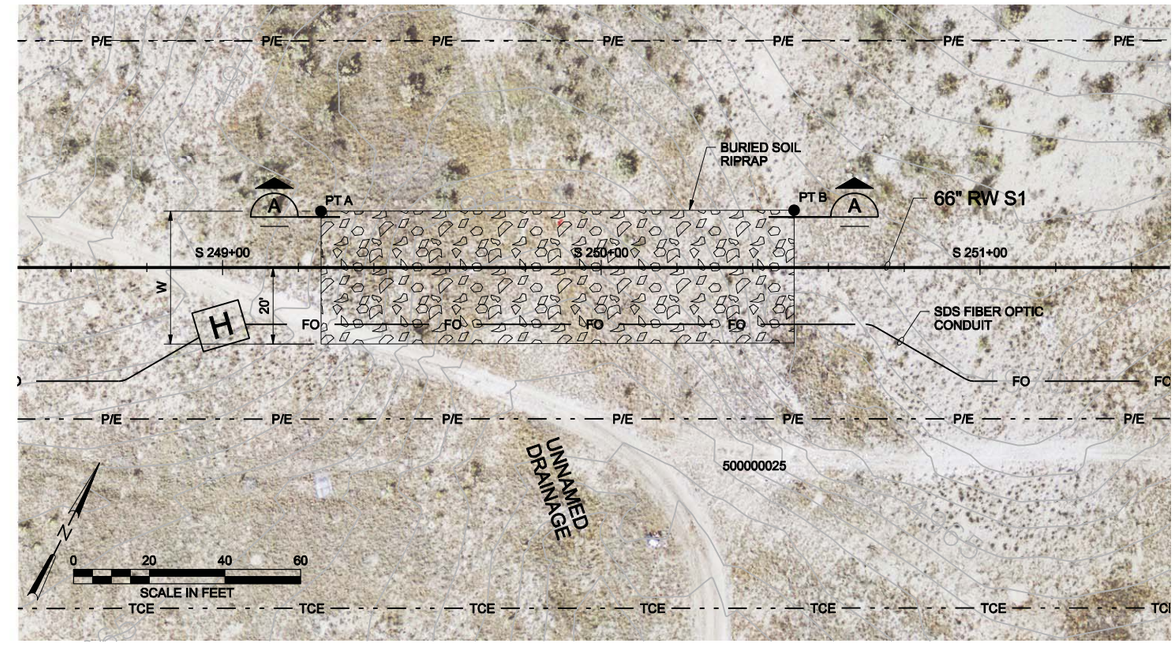

UNNAMED DRAINAGE STA S 249+26 TO STA S 250+51

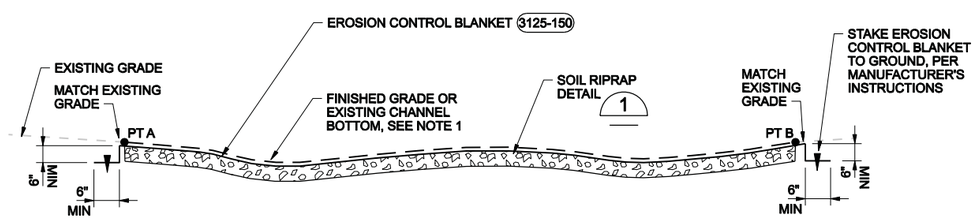

NOTES:

1. RESTORE CHANNEL BOTTOM TO EXISTING LINES AND GRADES FOLLOWING THE CONSTRUCTION OF THE PIPELINE.
2. PT. A AND PT. B ARE INTENDED TO MATCH THE LIMITS OF STREAM PROTECTION AND ARE LOCATED AT THE LIMITS OF RIPRAP.
3. PROTECT CHANNEL BANKS LOCATED OUTSIDE OF THE RIPRAP LIMITS.

SECTION A

NTS

S1-DC-1
S1-DC-2

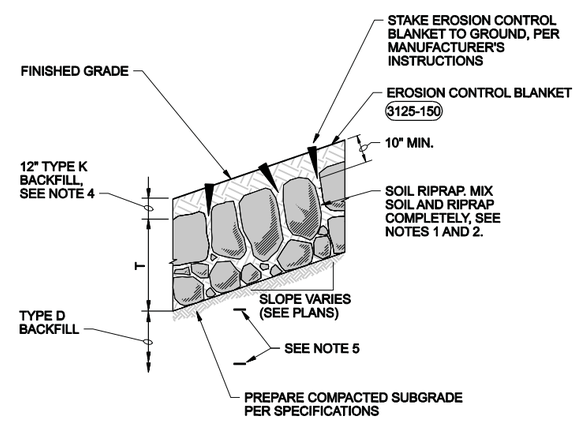

NOTES:

1. MIX UNIFORMALLY 65% RIPRAP BY VOLUME WITH 35% OF APPROVED SOIL BY VOLUME PRIOR TO PLACEMENT.
2. PLACE STONE-SOIL MIX TO RESULT IN SECURELY INTERLOCKED ROCK AT THE DESIGN THICKNESS AND GRADE. COMPACT AND LEVEL TO ELIMINATE ALL VOIDS AND ROCKS PROJECTING ABOVE DESIGN RIPRAP GRADE.
3. INSTALL SOIL RIPRAP AND EROSION CONTROL PER LIMITS IN PLAN VIEW AND HORIZONTAL CONTROL INFORMATION TABLE.
4. USE NATIVE TOPSOIL FROM PROJECT SITE.
5. INSTALL MARKING TAPE 3 FEET BELOW GRADE AND 1 FOOT ABOVE TOP OF PIPE AS INDICATED.

SOIL RIPRAP DETAIL 1

NTS

HORIZONTAL CONTROL INFORMATION						
PT. A	PT. B	PT. C	W *	D_{50}	RIP RAP TYPE	T
200 + 00	201 + 00	NA	35'	9"	L	18"
249 + 26	250 + 51	NA	35'	9"	L	18"
266 + 00	267 + 00	266 + 50	35'	9"	L	18"
282 + 50	283 + 50	NA	35'	9"	L	18"
319 + 30	320 + 80	NA	35'	9"	L	18"

* IF WIDTH OF EXCAVATION EXCEEDS 30', EXTEND SOIL RIPRAP AS NECESSARY TO MEET THE WIDTH OF EXCAVATION.

COLORADO LICENSED JOY L. HENRY 39310 6/30/11 PROFESSIONAL ENGINEER

DSGN	A TURNER				
DR	B NORVILLE				
CHK	C HOOPER				
APVD	J HENRY	NO.	DATE	REVISION	BY	APVD

VERIFY SCALE
BAR IS ONE INCH ON ORIGINAL DRAWING.
0 1"
IF NOT ONE INCH ON THIS SHEET, ADJUST SCALES ACCORDINGLY.

CH2MHILL
Colorado Springs, CO 80903

SOUTHERN DELIVERY SYSTEM
RAW WATER PIPELINE
SOUTH SECTION ONE

DRAINAGE CROSSINGS

STREAM STABILIZATION PLANS AND DETAILS

SHEET	42
DWG	S1-DC-1
DATE	JULY 2011
PROJ	171473.20.SP

Colorado Springs Utilities Project Number: SDS-002 CSU Work Order Number: 1146977

FILENAME: SP105nDC01d_171473.dgn PLOT DATE: 6/29/2011 PLOT TIME: 10:59:28 AM

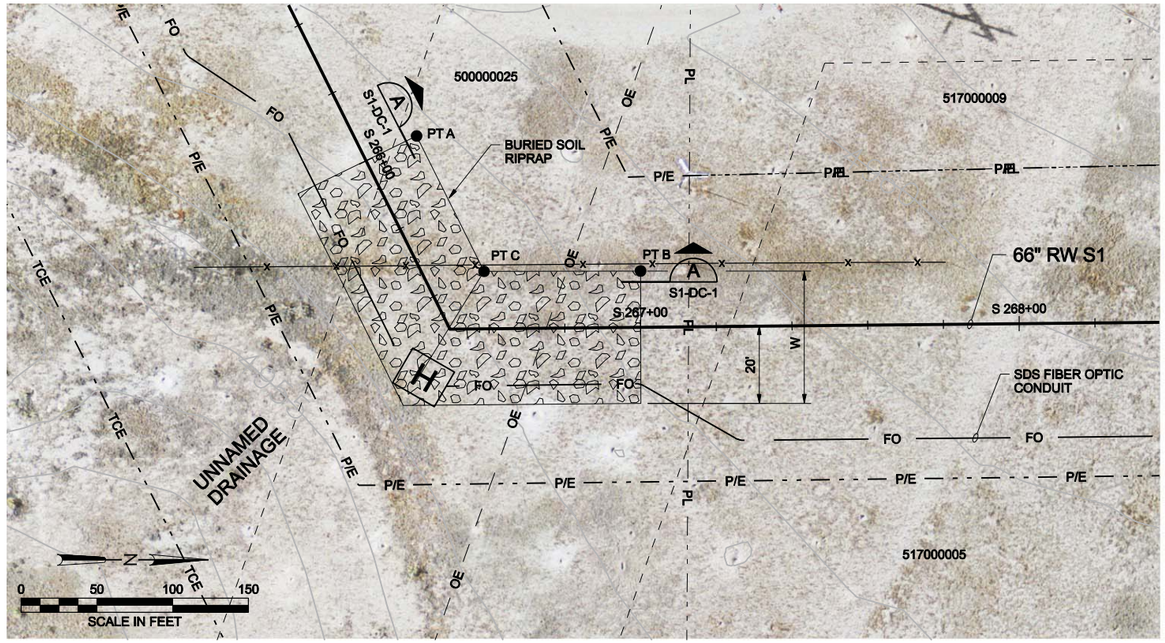

UNNAMED DRAINAGE STA 266+00 TO STA S 267+00

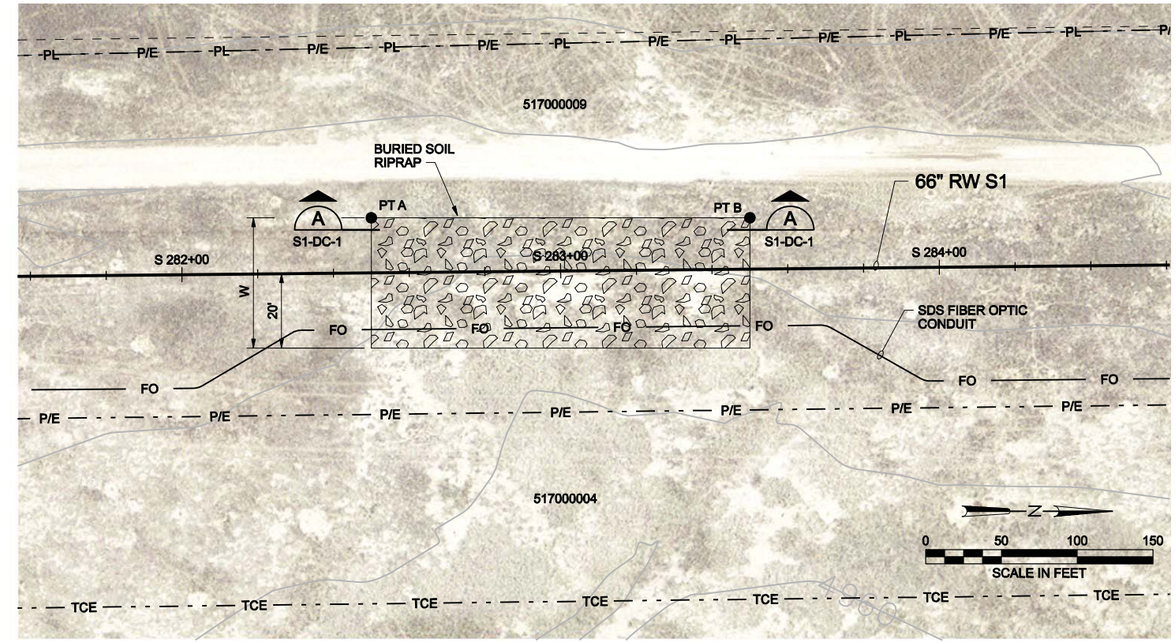

UNNAMED DRAINAGE STA S 282+00 TO STA 283+50

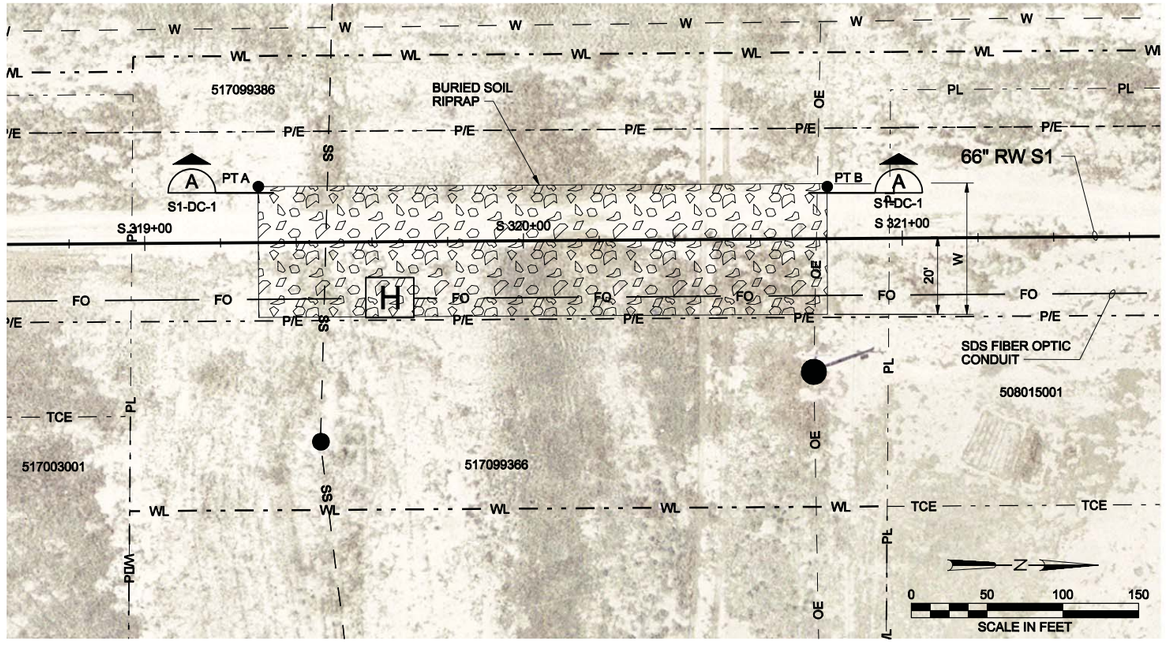

UNNAMED DRAINAGE STA S 319+30 TO STA S 320+80

COLORADO LICENSED
GODY L. HENRY
39310
6/30/11
PROFESSIONAL ENGINEER

DSGN A TURNER						
DR B NORVILLE						
CHK C HOOPER						
APVD J HENRY	NO.	DATE	REVISION	BY	APVD	

VERIFY SCALE
BAR IS ONE INCH ON ORIGINAL DRAWING.
0 1"
IF NOT ONE INCH ON THIS SHEET, ADJUST SCALES ACCORDINGLY.

CH2MHILL
Colorado Springs, CO 80903

SOUTHERN DELIVERY SYSTEM
RAW WATER PIPELINE
SOUTH SECTION ONE

DRAINAGE CROSSINGS

STREAM STABILIZATION PLANS

SHEET	43
DWG	S1-DC-2
DATE	JULY 2011
PROJ	171473.20.SP

Colorado Springs Utilities Project Number: SDS-002 CSU Work Order Number: 1146977

FILENAME: SP105nDC02d_171473.dgn PLOT DATE: 6/14/2011 PLOT TIME: 10:15:05 AM

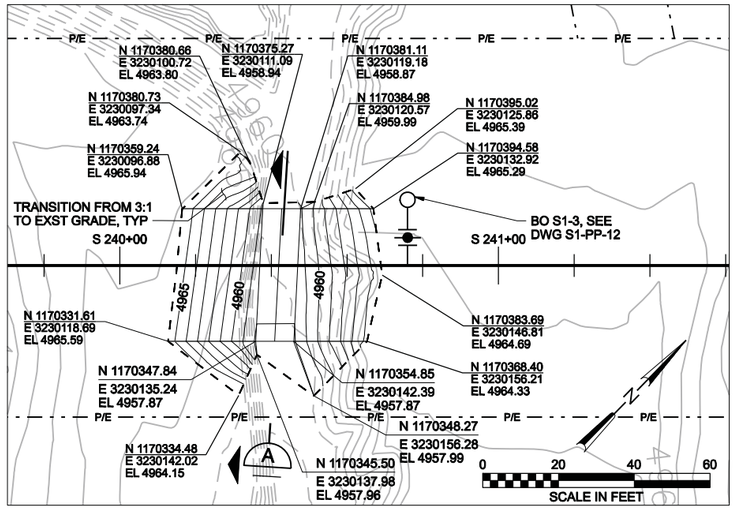

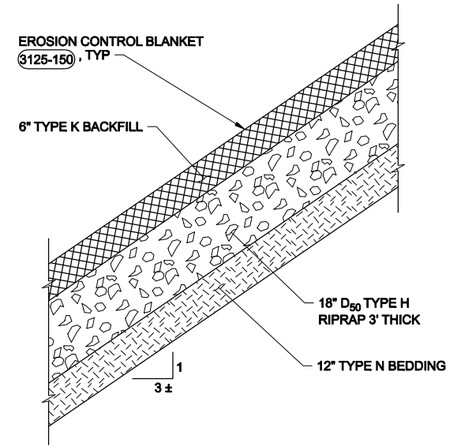

SIDE SLOPES DETAIL 1

NTS

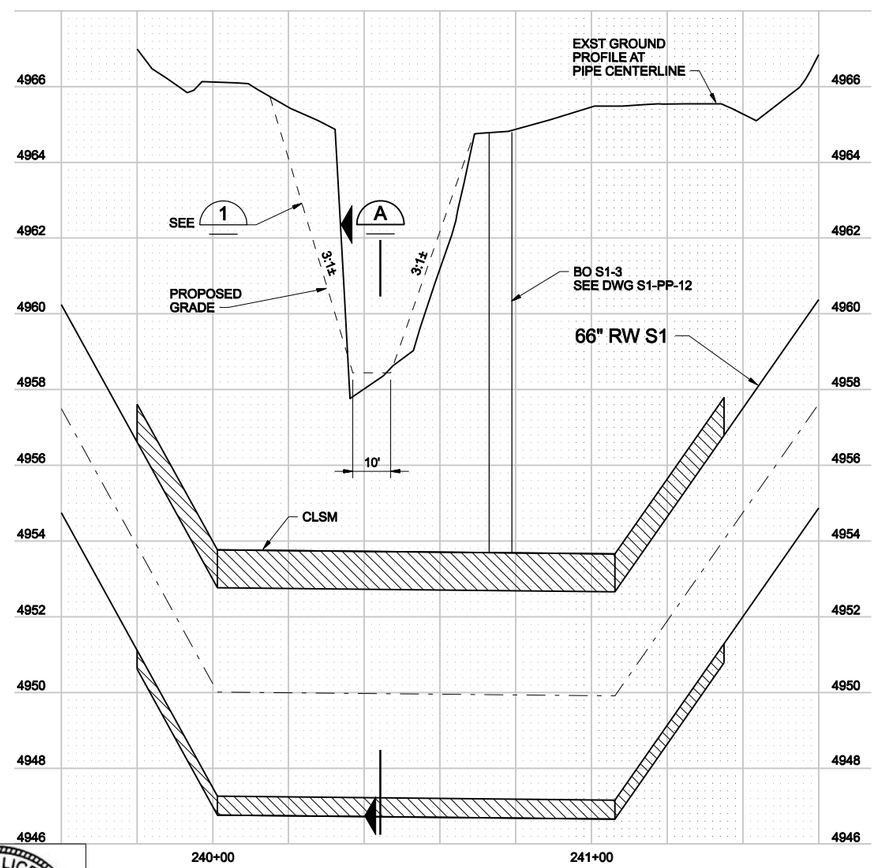

PIPELINE PROFILE

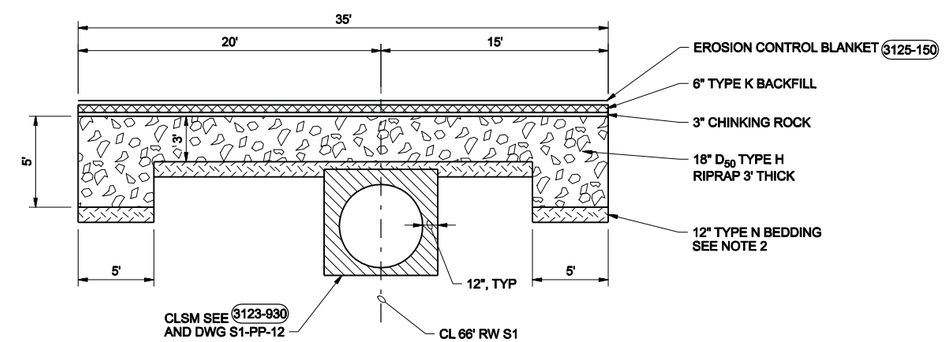

CHANNEL BOTTOM SECTION A

1"=20'

NOTES:

1. INSTALL RIPRAP AND EROSION CONTROL PER LIMITS IN PLAN VIEW AND HORIZONTAL CONTROL INFORMATION.
2. TYPE N BEDDING TO BE 6" THICK ABOVE CLSM.
3. $Q_{100} = Q_{DESIGN} = 2016CFS$

COLORADO LICENSED
JODY L. HENRY
39310
6/30/11
PROFESSIONAL ENGINEER

DSGN	A ESPOSITO				
DR	B NORVILLE/J WALKER				
CHK	C HOOPER				
APVD	J HENRY	NO.	DATE	REVISION	BY	APVD

VERIFY SCALE
BAR IS ONE INCH ON ORIGINAL DRAWING.
0 1"
IF NOT ONE INCH ON THIS SHEET, ADJUST SCALES ACCORDINGLY.

CH2MHILL
Colorado Springs, CO 80903

SOUTHERN DELIVERY SYSTEM
RAW WATER PIPELINE
SOUTH SECTION ONE

DRAINAGE CROSSING

DRAINAGEWAY CROSSING
PLAN AND DETAILS

SHEET	44
DWG	S1-DC-3
DATE	JULY 2011
PROJ	171473.20.SP

Colorado Springs Utilities Project Number: SDS-002 CSU Work Order Number: 1146977

FILENAME: SP105nDC03d_171473.dgn PLOT DATE: 6/29/2011 PLOT TIME: 11:00:49 AM

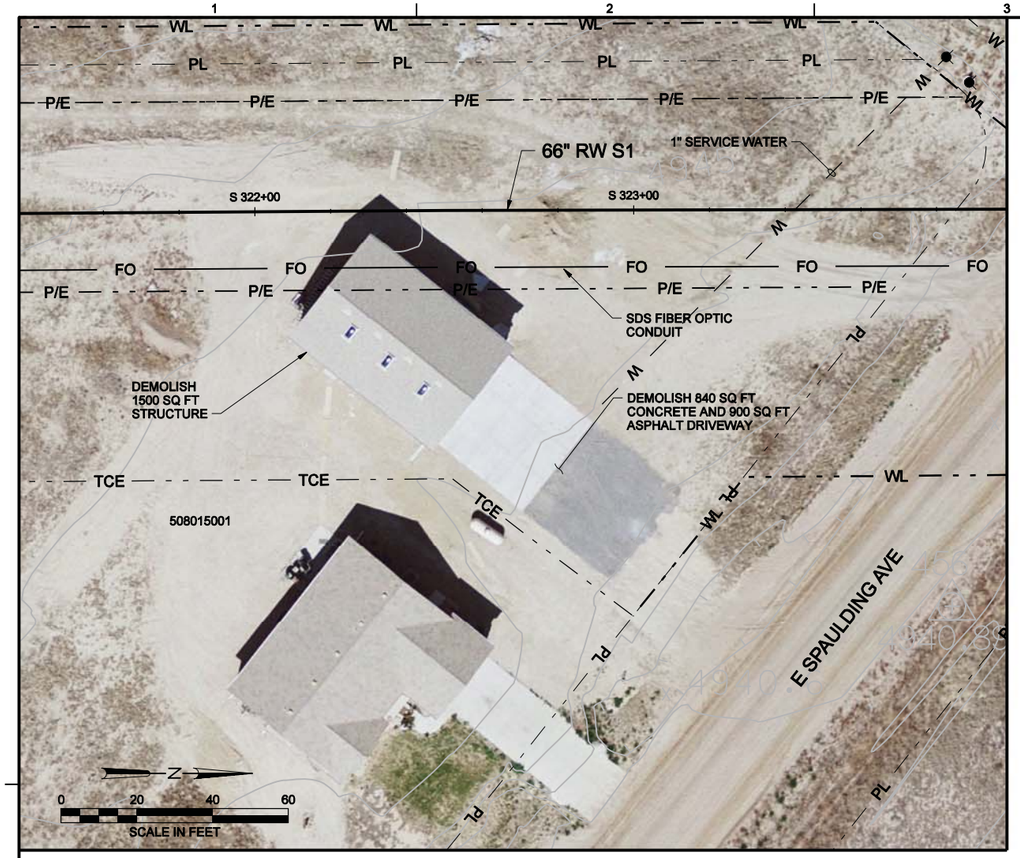

508015001 PROPERTY PLAN

NOTES:

1. DISCONNECT AND CAP UTILITIES SERVING THE STRUCTURE PER THE REQUIREMENTS OF PUEBLO COUNTY BUILDING CODE AND UTILITY COMPANIES.
2. VEHICLES REMOVED BY OTHERS.

ELEVATION - NORTH

NTS

ELEVATION - WEST

NTS

ELEVATION - SOUTH

NTS

COLORADO LICENSED
CODY L. HENRY
39310
6/30/11
PROFESSIONAL ENGINEER

DSGN	E FORD					
DR	B NORVILLE					
CHK	G SIMPSON					
APVD	J HENRY	NO.	DATE	REVISION	BY	APVD

VERIFY SCALE
BAR IS ONE INCH ON ORIGINAL DRAWING.
0 1"
IF NOT ONE INCH ON THIS SHEET, ADJUST SCALES ACCORDINGLY.

CH2MHILL
Colorado Springs, CO 80903

SOUTHERN DELIVERY SYSTEM
RAW WATER PIPELINE
SOUTH SECTION ONE

DEMOLITION PLANS

508015001 PROPERTY
DEMOLITION PLAN AND PHOTOS

SHEET	45
DWG	S1-DM-1
DATE	JULY 2011
PROJ	171473.20.SP

Colorado Springs Utilities Project Number: SDS-002 CSU Work Order Number: 1146977

FILENAME: SP105nDM01d_171473.dgn PLOT DATE: 6/14/2011 PLOT TIME: 10:32:09 AM

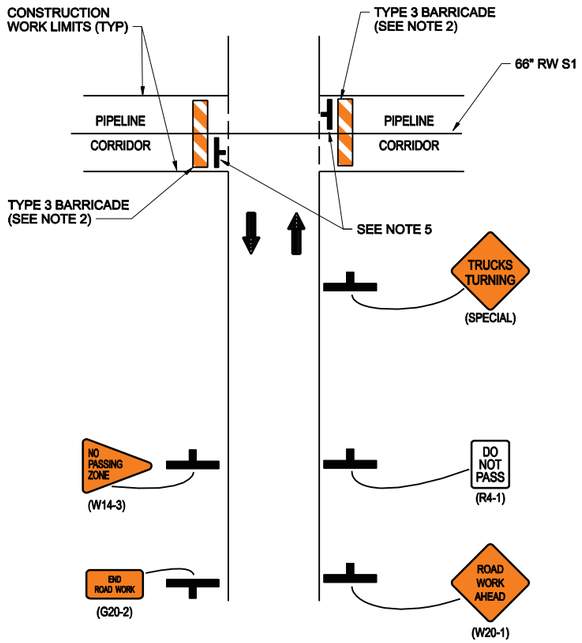

TYPICAL HAUL ROAD ACCESS POINT SIGNAGE

NTS

1 S1-TC-2

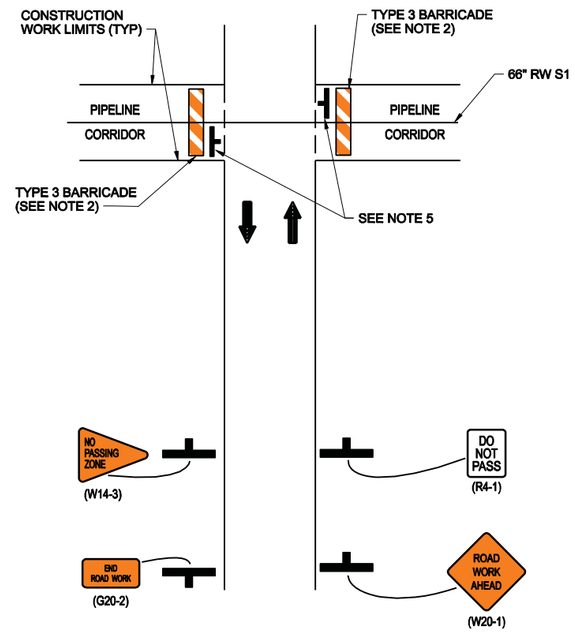

TYPICAL PIPELINE CROSSING SIGNAGE

NTS

2 S1-TC-2

WORK ZONE TRAFFIC CONTROL GENERAL NOTES:

1. PROVIDE WORK ZONE TRAFFIC CONTROL IN CONFORMANCE TO THE MANUAL OF UNIFORM TRAFFIC CONTROL DEVICES FOR STREETS AND HIGHWAYS (MUTCD).
2. THESE TRAFFIC MAINTENANCE PLANS DO NOT DEPICT THE ADVANCE WARNING SIGNS FOR EACH PHASE OF CONSTRUCTION. SUBMIT DETAILED METHOD OF HANDLING TRAFFIC DRAWINGS WITH REQUIRED SIGNAGE FOR EACH PHASE AS PART OF SUBMITTAL FOR WORK IN RIGHT-OF-WAY.
3. PROVIDE FLAGGERS OR PORTABLE TRAFFIC SIGNAL WHERE A ONE-WAY BI-DIRECTIONAL LANE IS BEING USED.
4. PROVIDE ACCESSIBLE AND MAINTAINED PEDESTRIAN ACCESS AND CROSSINGS AT ALL TIMES UNLESS OTHERWISE SHOWN IN THE CONSTRUCTION DOCUMENTS.
5. PROVIDE CRASHWORTHY TEMPORARY BARRIERS AND END TREATMENTS.
6. PROVIDE DISTANCE BETWEEN WORK ZONE TRAFFIC CONTROL AND DETOUR SIGNS IN ACCORDANCE WITH THE MUTCD.
7. PROVIDE AND DESIGN TRAFFIC LANES AT INTERSECTIONS WIDE ENOUGH TO INCLUDE AN ALLOWABLE TRAVEL PATH FOR SEMITRAILER TRUCKS TO TURN ONTO/FROM CROSS STREETS.
8. ACCESS TO THE PIPELINE EASEMENT AT DESIGNATED ACCESS POINTS ONLY. SEE HAUL ROUTE PLAN FOR ACCESS POINT, SEE DWGS S1-G-5.
9. USE OF COUNTY ROADS NOT IDENTIFIED AS HAUL ROADS ON THE HAUL ROUTE PLANS BY CONSTRUCTION VEHICLES NOT ALLOWED.

LEGEND

- SIGN
- TYPE 3 BARRICADE
- TRAFFIC FLOW ARROW
- CHANNELIZING BARRELS
- TEMPORARY CONCRETE BARRIER
- DETOUR ROUTE
- WORK ZONE

TYPICAL SIGNAGE NOTES:

1. PROVIDE TRAFFIC CONTROL SIGNAGE IN BOTH DIRECTIONS.
2. CLOSE THE PIPELINE CONSTRUCTION ENTRANCES WHEN NOT IN USE, WITH TYPE 3 BARRICADES AND COVER THE UNUSED SIGNS.
3. DURING ROAD CLOSURES, ADDITIONAL SIGNAGE AND DETAILED DETOUR PLAN IS REQUIRED.
4. ADDITIONAL SIGNAGE MAY BE REQUIRED FOR DIRECTING MATERIAL DELIVERIES TO THE SITE.
5. INSTALL STOP SIGNS AT LOCATIONS WHERE CONSTRUCTION TRAFFIC EXITS WORK LIMITS ONTO PUBLIC LAND.

COLORADO LICENSED KELLY RENEE RONAT 40108 6-30-11 PROFESSIONAL ENGINEER

DSGN	J HENRY
DR	S KRAMER
CHK	K RONAT
APVD	J HENRY

NO.	DATE	REVISION	BY	APVD

VERIFY SCALE
BAR IS ONE INCH ON ORIGINAL DRAWING.
0 1"
IF NOT ONE INCH ON THIS SHEET, ADJUST SCALES ACCORDINGLY.

CH2MHILL
Colorado Springs, CO 80903

SOUTHERN DELIVERY SYSTEM
RAW WATER PIPELINE
SOUTH SECTION ONE

TRAFFIC PHASING PLANS

ACCESS POINT AND HAUL ROAD SIGNAGE, GENERAL NOTES AND LEGENDS

SHEET	46
DWG	S1-TC-1
DATE	JULY 2011
PROJ	171473.20.SP

Colorado Springs Utilities Project Number: SDS-002 CSU Work Order Number: 1146977

FILENAME: SP105nTC1d_171473.dgn PLOT DATE: 6/29/2011 PLOT TIME: 11:05:45 AM

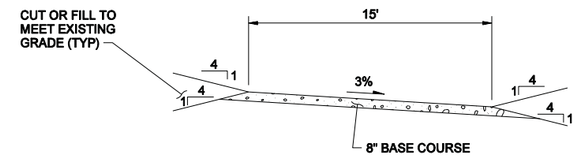

TEMPORARY GRAVEL ROAD TYPICAL SECTION (1)

NTS

NOTES:

1. MAINTAIN A MINIMUM OF ONE 15' WIDE BI-DIRECTIONAL LANE FOR THE DURATION OF THE PIPELINE ROAD CROSSING CONSTRUCTION.
2. PROVIDE FLAGGERS OR PORTABLE TRAFFIC SIGNAL FOR THE DURATION OF THE PIPELINE ROAD CROSSING CONSTRUCTION AT JUNIPER ROAD.
3. REPLACE ASPHALT PAVEMENT AND STRIPING IN ACCORDANCE WITH THE PROJECT SPECIFICATIONS.
4. PROVIDE ADVANCE WARNING SIGNS AND FLAGGERS OR PORTABLE TRAFFIC SIGNAL IN CONFORMANCE WITH THE MANUAL OF UNIFORM TRAFFIC CONTROL DEVICES FOR STREETS AND HIGHWAYS.
5. TRAFFIC CONTROL PLANS REQUIRED.
6. INSTALL TRAFFIC COUNTER IN ACCORDANCE WITH SPECIFICATION SECTION 01 55 13, TEMPORARY ACCESS ROAD AND PARKING AREAS. CONTRACTOR, SUBCONTRACTOR, AND DELIVERIES TO ENTER SITE FROM THIS LOCATION FOR DURATION OF WORK AT LAKE PUEBLO STATE PARK. TEMPORARILY REMOVE TRAFFIC COUNTER DURING PUBLIC USE OF DETOUR.

JUNIPER ROAD TRAFFIC MAINTENANCE AND DETOUR PLAN

N

0 50 100 200
SCALE IN FEET

COLORADO LICENSED PROFESSIONAL ENGINEER 40108 6-30-11

DSGN	J HENRY					
DR	S KRAMER					
CHK	K RONAT					
APVD	J HENRY	NO.	DATE	REVISION	BY	APVD

VERIFY SCALE
BAR IS ONE INCH ON ORIGINAL DRAWING.
0 1"
IF NOT ONE INCH ON THIS SHEET, ADJUST SCALES ACCORDINGLY.

CH2MHILL
Colorado Springs, CO 80903

SOUTHERN DELIVERY SYSTEM
RAW WATER PIPELINE
SOUTH SECTION ONE

TRAFFIC PHASING PLANS
TRAFFIC MAINTENANCE DETOUR PLAN

SHEET	47
DWG	S1-TC-2
DATE	JULY 2011
PROJ	171473.20.SP

Colorado Springs Utilities Project Number: SDS-002 CSU Work Order Number: 1146977

FILENAME: SP105nTC2d_171473.dgn PLOT DATE: 6/30/2011 PLOT TIME: 5:58:26 AM

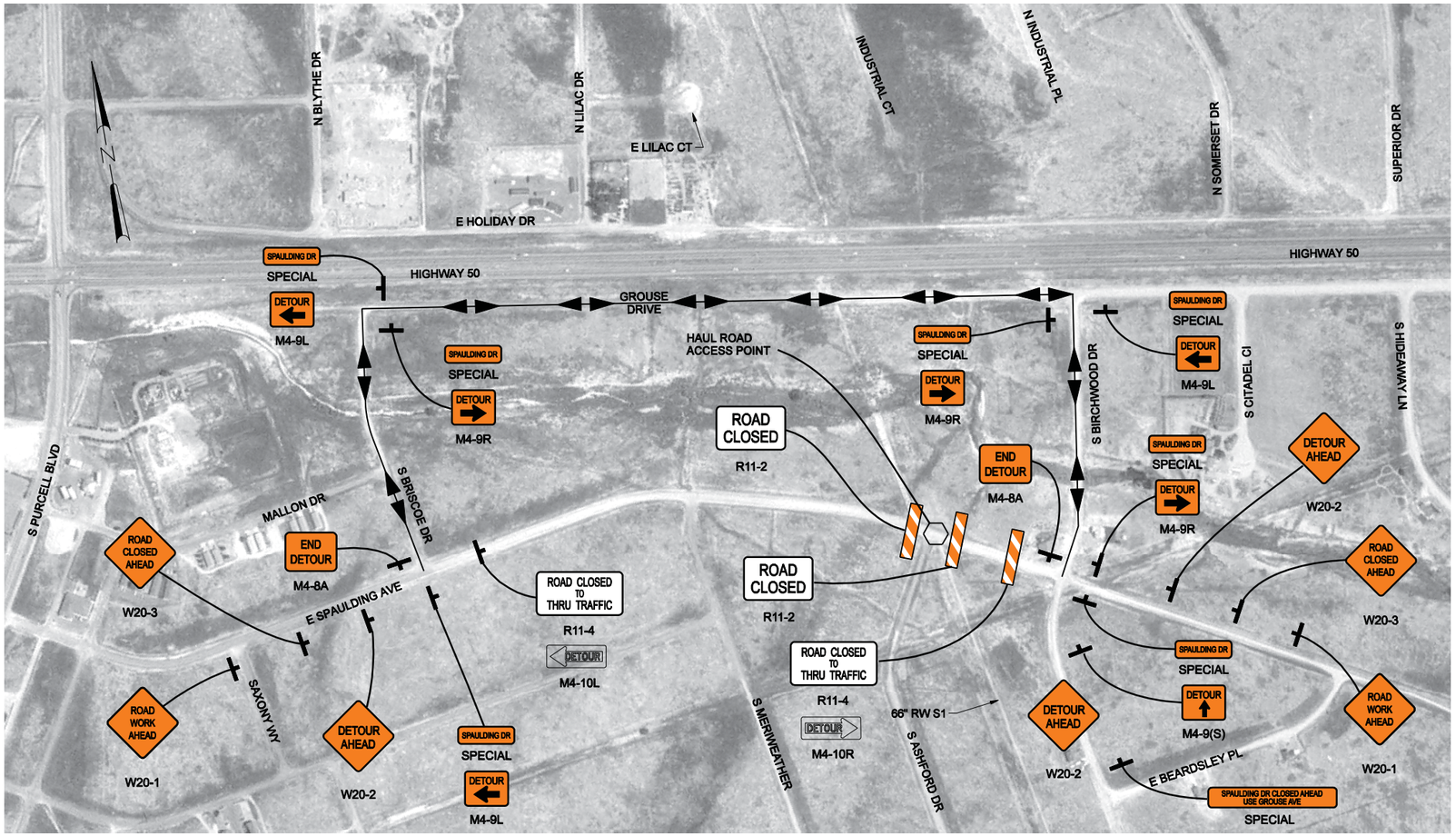

E. SPAULDING AVE. TRAFFIC MAINTENANCE AND DETOUR PLAN

0 300 600 900
SCALE IN FEET

COLORADO LICENSED PROFESSIONAL ENGINEER 40108 6-30-11

DSGN	J HENRY					
DR	S KRAMER					
CHK	K RONAT					
APVD	J HENRY	NO.	DATE	REVISION	BY	APVD

VERIFY SCALE
BAR IS ONE INCH ON ORIGINAL DRAWING.
0 1"
IF NOT ONE INCH ON THIS SHEET, ADJUST SCALES ACCORDINGLY.

CH2MHILL
Colorado Springs, CO 80903

SOUTHERN DELIVERY SYSTEM
RAW WATER PIPELINE
SOUTH SECTION ONE

TRAFFIC PHASING PLANS

TRAFFIC MAINTENANCE DETOUR PLAN

SHEET	48
DWG	S1-TC-3
DATE	JULY 2011
PROJ	171473.20.SP

Colorado Springs Utilities Project Number: SDS-002 CSU Work Order Number: 1146977

FILENAME: SP105nTC3d_171473.dgn PLOT DATE: 6/14/2011 PLOT TIME: 12:30:54 PM

SEDIMENT AND EROSION CONTROL GENERAL NOTES

1. A STORMWATER MANAGEMENT PLAN (SWMP) HAS BEEN PREPARED BY UTILITIES FOR USE BY THE CONTRACTOR. THE SWMP HAS BEEN PREPARED IN ACCORDANCE WITH PUEBLO COUNTY, PUEBLO WEST METRO DISTRICT AND COLORADO DEPARTMENT OF PUBLIC HEALTH AND ENVIRONMENT CRITERIA. USE AS REQUIRED TO OBTAIN PERMITS IDENTIFIED IN THE SPECIFICATIONS. OBTAIN AND RETAIN A COPY OF THE SWMP ON SITE.
2. PLACE EROSION AND SEDIMENT CONTROL BMPS AND PROVIDE MAINTENANCE AND RECORD KEEPING IN ACCORDANCE WITH FEDERAL, STATE, AND COUNTY STANDARDS.
3. INSTALL WORK LIMIT FENCING DEFINING THE LIMITS OF CONSTRUCTION PRIOR TO OTHER CONSTRUCTION ACTIVITIES, INCLUDING CONSTRUCTION LIMITS ADJACENT TO STREAM CORRIDORS AND OTHER AREAS TO BE PRESERVED.
4. INSTALL EROSION AND SEDIMENT CONTROL BMPS, WHERE POSSIBLE, BEFORE THE START OF CONSTRUCTION.
5. INSTALL APPROVED BMPS AROUND STOCKPILED MATERIALS PER THE SPECIFICATIONS.
6. INSTALL APPROVED BMPS AROUND STAGING AREAS AND MAINTENANCE AREAS. PROTECT AND MAINTAIN AREAS PER FEDERAL, STATE, AND COUNTY STANDARDS.
7. STORE AND PROTECT HAZARDOUS MATERIAL PER REQUIREMENTS OF PROJECT PERMITS AND PER FEDERAL, STATE AND COUNTY OR OTHER APPLICABLE REQUIREMENTS
8. ADHERE TO THE APPROVED LIMITS OF CONSTRUCTION. OBTAIN APPROVAL FROM CONSTRUCTION MANAGER PRIOR TO MAKING CHANGES TO THE WORK LIMITS. ADDITIONAL EROSION/SEDIMENT CONTROLS MAY BE REQUIRED.
9. RETAIN AND PROTECT NATURAL VEGETATION WHEREVER POSSIBLE. LIMIT EXPOSURE OF SOIL TO EROSION BY REMOVAL OR DISTURBANCE OF VEGETATION TO THE AREA REQUIRED FOR IMMEDIATE CONSTRUCTION OPERATIONS.
10. CONSTRUCTION VEHICLE TRAFFIC MUST ENTER/EXIT THE SITE THROUGH THE APPROVED ACCESS POINTS. VEHICLE TRACKING CONTROLS ARE REQUIRED AT ACCESS POINTS ON THE SITE. ADDITIONAL VEHICLE TRACKING CONTROLS TO BE ADDED AS REQUIRED BY PUEBLO COUNTY. INSTALL AND MAINTAIN VEHICLE TRACKING CONTROLS PER PUEBLO COUNTY.
11 KEEP PAVED AREAS CLEAN INCLUDING STREETS THROUGHOUT CONSTRUCTION. CLEAN WITH A STREET SWEEPER OR SIMILAR DEVICE. AT FIRST NOTICE OF DIRT TRACKED ON PAVED AREAS, STREET WASHING IS NOT ALLOWED. THE CONSTRUCTION MANAGER RESERVES THE RIGHT TO REQUIRE ADDITIONAL MEASURES TO ENSURE AREA STREETS ARE KEPT FREE OF SEDIMENT AND/OR CONSTRUCTION DEBRIS.
12. THE EROSION CONTROL PLANS MAY REQUIRE CHANGES OR ALTERATIONS TO MEET CHANGING SITE OR PROJECT CONDITIONS, TO ADDRESS INEFFICIENCIES IN DESIGN OR INSTALLATION, OR TO MEET PERMIT REQUIREMENTS.
13. PROVIDE LINING OF TEMPORARY SWALES AND DITCHES. NO PERMANENT EARTH SLOPES GREATER THAN 3:1 ALLOWED, EXCEPT WHERE SHOWN ON DRAWINGS.
14. REMEDIATE SEDIMENT OR SOIL ACCUMULATIONS CREATED DUE TO CONSTRUCTION ACTIVITIES BEYOND THE LIMITS OF CONSTRUCTION IMMEDIATELY.
15. PROVIDE A WATER SOURCE ON SITE DURING CONSTRUCTION ACTIVITIES AND UTILIZE AS REQUIRED TO MINIMIZE DUST FROM EQUIPMENT AND WIND IN ACCORDANCE WITH THE SPECIFICATIONS.
16. SEED AND MULCH SOILS THAT WILL BE STOCKPILED FOR MORE THAN FOURTEEN (14) DAYS. DO NOT PLACE STOCKPILES WITHIN ONE HUNDRED (100) FEET OF THE TOP OF BANK OF ANY WATERWAY OR DRAINAGE.
17. CHEMICAL OR HAZARDOUS MATERIAL SPILLS THAT MAY ENTER WATERS OF THE STATE OF COLORADO, THAT INCLUDE BUT ARE NOT LIMITED TO, SURFACE WATER, GROUNDWATER AND DRY GULLIES OR STORM SEWERS, LEADING TO THE RELEASES OF PETROLEUM PRODUCTS AND CERTAIN HAZARDOUS SUBSTANCES LISTED UNDER THE FEDERAL CLEAN WATER ACT (40 CFR PART 116) MUST BE REPORTED TO THE NATIONAL RESPONSE CENTER AS WELL AS THE CDPHE. REPORT SPILLS THAT POSE AN IMMEDIATE RISK TO HUMAN LIFE TO 911.
18. THE USE OF REBAR, STEEL STAKES, OR STEEL FENCE POSTS FOR STAKING OR SUPPORT OF BMPS IS PROHIBITED.
19. INSTALL CONCRETE WASHOUT LOCATIONS AS NEEDED WITHIN THE WORK LIMITS. THE DISCHARGE OF WATER CONTAINING WASTE CONCRETE IS PROHIBITED WITHIN 500 FEET OF ANY WATERWAY. PROPERLY CLEAN UP AND DISPOSE OF CONCRETE WASTE AT AN APPROPRIATE LOCATION.
20. STABILIZE DISTURBED AREAS INCLUDING ROADS, WITHIN 14 DAYS OF SUBSTANTIAL COMPLETION OF GRADING, INCLUDING AREAS TO REMAIN DORMANT FOR LONGER THAN 30 DAYS, WHICHEVER IS LESS. THIS MAY REQUIRE MULTIPLE MOBILIZATIONS FOR SEEDING AND MULCHING.
21. TRASH RECEPTACLES AND PORTABLE TOILETS ARE PROHIBITED WITHIN 500 FEET OF ANY WATERWAY OR DRAINAGE.
22. CONDUCT VEHICLE MAINTENANCE, CLEANING, AND FUELING OFF-SITE, IF POSSIBLE. IF CONDUCTED ONSITE, THESE OPERATIONS MUST BE APPROVED BY CONSTRUCTION MANAGER, AND CONDUCTED ON A LEVEL GROUND SURFACE IN A DESIGNATED AREA WITH APPROVED PERIMETER CONTROLS.
23. STORE HAZARDOUS MATERIALS AND CHEMICALS ONSITE ONLY IN THE STAGING AREA AND ONLY IN AN APPROVED, COVERED TEMPORARY STRUCTURE. OBTAIN ANY REQUIRED PERMITS OR APPROVALS.
24. INSPECT BMPS A MINIMUM OF EVERY 14 DAYS AND IMMEDIATELY AFTER STORM EVENTS. CORRECT ANY DAMAGE OR DEFICIENCIES DISCOVERED DURING THE INSPECTION IN ACCORDANCE WITH PERMIT REQUIREMENTS, SPECIFICATIONS, AND PUEBLO COUNTY.
25. REMOVE SEDIMENTS WHEN SEDIMENTS HAVE ACCUMULATED TO 1/2 THE HEIGHT OF THE BMP.

EROSION CONTROL LEGEND

- STRAW BALES
- ROCK SOCKS
- ROCK CHECK DAMS
- SILT FENCE
- CONCRETE WASHOUT

CONSTRUCTION ENTRANCE

- PAVED
- GRAVEL
- DIRECTION OF DRAINAGE FLOW

COLORADO LICENSED PROFESSIONAL ENGINEER GODY L. HENRY 39310 6/30/11

DSGN	E FORD					
DR	B NORVILLE					
CHK	G SIMPSON					
APVD	J HENRY	NO.	DATE	REVISION	BY	APVD

VERIFY SCALE
BAR IS ONE INCH ON ORIGINAL DRAWING.
0 1"
IF NOT ONE INCH ON THIS SHEET, ADJUST SCALES ACCORDINGLY.

CH2MHILL
Colorado Springs, CO 80903

SOUTHERN DELIVERY SYSTEM
RAW WATER PIPELINE
SOUTH SECTION ONE

EROSION CONTROL AND EASEMENT PLANS

EROSION CONTROL NOTES

SHEET	49
DWG	S1-EC-1
DATE	JULY 2011
PROJ	171473.20.SP

Colorado Springs Utilities Project Number: SDS-002 CSU Work Order Number: 1146977

FILENAME: SP105nEC01d_171473.dgn PLOT DATE: 6/29/2011 PLOT TIME: 8:21:39 AM

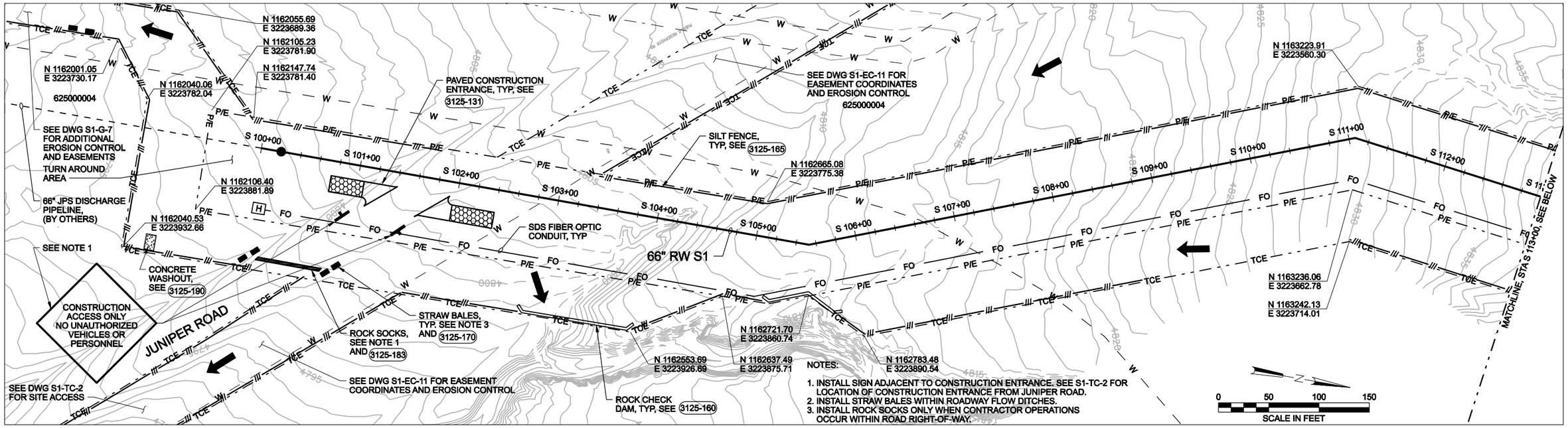

NOTES:

1. INSTALL SIGN ADJACENT TO CONSTRUCTION ENTRANCE. SEE S1-TC-2 FOR LOCATION OF CONSTRUCTION ENTRANCE FROM JUNIPER ROAD.
2. INSTALL STRAW BALES WITHIN ROADWAY FLOW DITCHES.
3. INSTALL ROCK SOCKS ONLY WHEN CONTRACTOR OPERATIONS OCCUR WITHIN ROAD RIGHT-OF-WAY.

EROSION CONTROL PLAN, SEE S1-PP-1

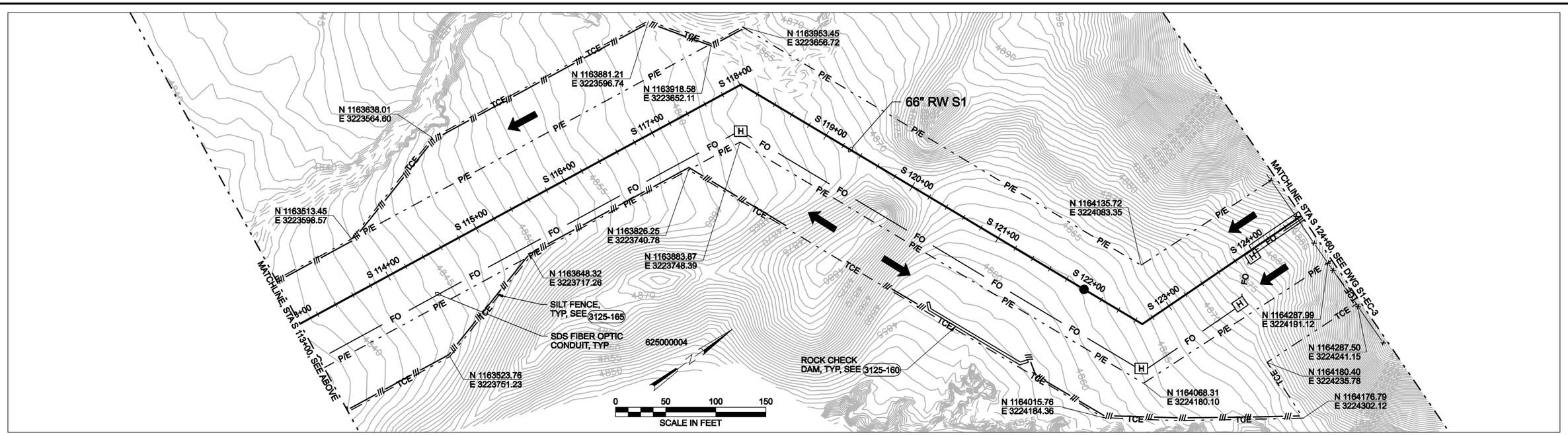

EROSION CONTROL PLAN, SEE S1-PP-2

COLORADO LICENSED
GARY L. HENRY
39310
6/30/11
PROFESSIONAL ENGINEER

DSGN	E FORD					
DR	B NORVILLE					
CHK	G SIMPSON					
APVD	J HENRY	NO.	DATE	REVISION	BY	APVD

VERIFY SCALE
BAR IS ONE INCH ON ORIGINAL DRAWING.
0 1"
IF NOT ONE INCH ON THIS SHEET, ADJUST SCALES ACCORDINGLY.

CH2MHILL
Colorado Springs, CO 80903

SOUTHERN DELIVERY SYSTEM
RAW WATER PIPELINE
SOUTH SECTION ONE

EROSION CONTROL AND EASEMENT PLANS

STATION S 100+00 TO STATION S 124+60

SHEET	50
DWG	S1-EC-2
DATE	JULY 2011
PROJ	171473.20.SP

Colorado Springs Utilities Project Number: SDS-002 CSU Work Order Number: 1146977

FILENAME: SP105nEC02d_171473.dgn PLOT DATE: 6/29/2011 PLOT TIME: 9:12:02 AM

NOTES:

1. INSTALL WORK LIMIT FENCING TO ENCLOSE WORK AREA AS NEEDED WITHIN THE PE AND TCE, AND OUTSIDE OF UPRR EASEMENT.

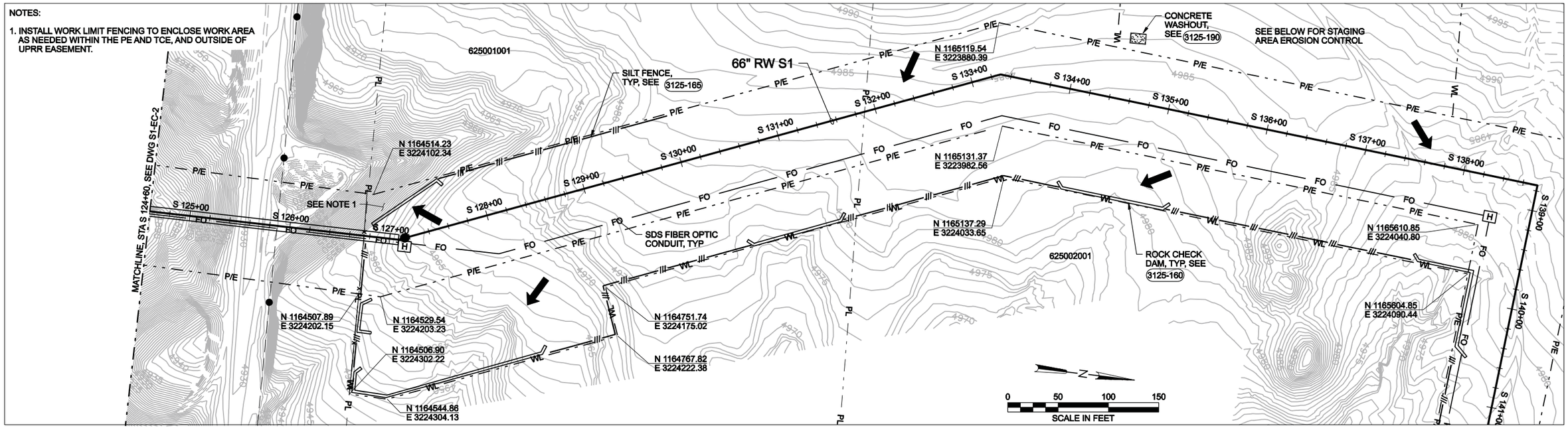

EROSION CONTROL PLAN, SEE S1-PP-3 AND S1-PP-4

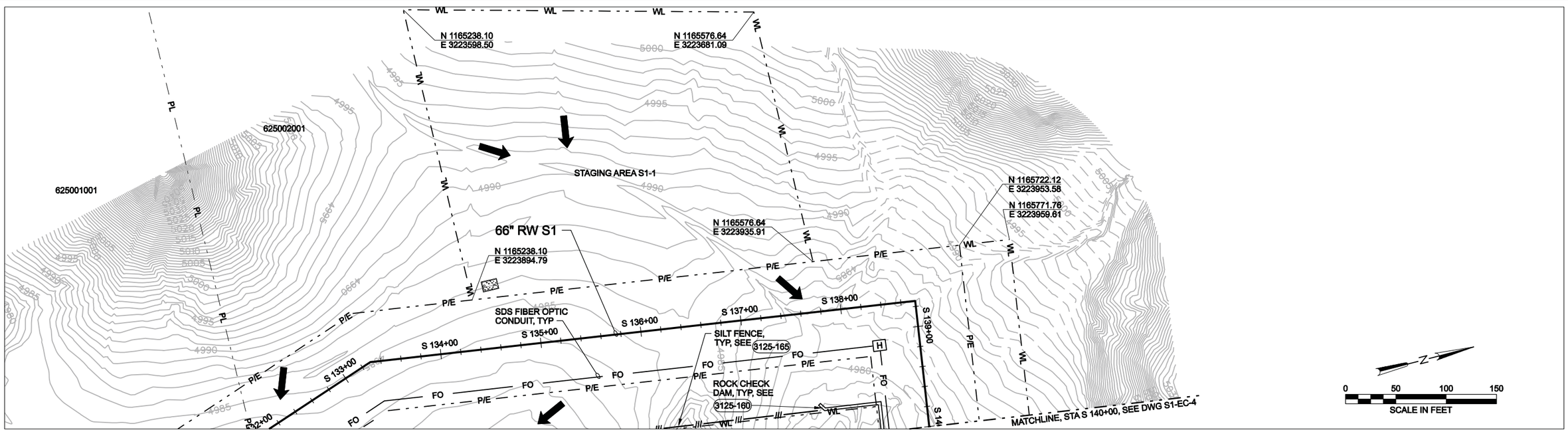

EROSION CONTROL PLAN, SEE S1-PP-4

COLORADO LICENSED PROFESSIONAL ENGINEER GLORY L. HENRY 39310 6/30/11

DSGN	E FORD					
DR	B NORVILLE					
CHK	G SIMPSON					
APVD	J HENRY	NO.	DATE	REVISION	BY	APVD

VERIFY SCALE
BAR IS ONE INCH ON ORIGINAL DRAWING.
0 1"
IF NOT ONE INCH ON THIS SHEET, ADJUST SCALES ACCORDINGLY.

CH2MHILL
Colorado Springs, CO 80903

SOUTHERN DELIVERY SYSTEM
RAW WATER PIPELINE
SOUTH SECTION ONE

EROSION CONTROL AND EASEMENT PLANS

STATION S 124+60 TO STATION S 140+00

SHEET	51
DWG	S1-EC-3
DATE	JULY 2011
PROJ	171473.20.SP

Colorado Springs Utilities Project Number: SDS-002 CSU Work Order Number: 1146977

FILENAME: SP105nEC03d_171473.dgn PLOT DATE: 6/29/2011 PLOT TIME: 9:22:02 AM

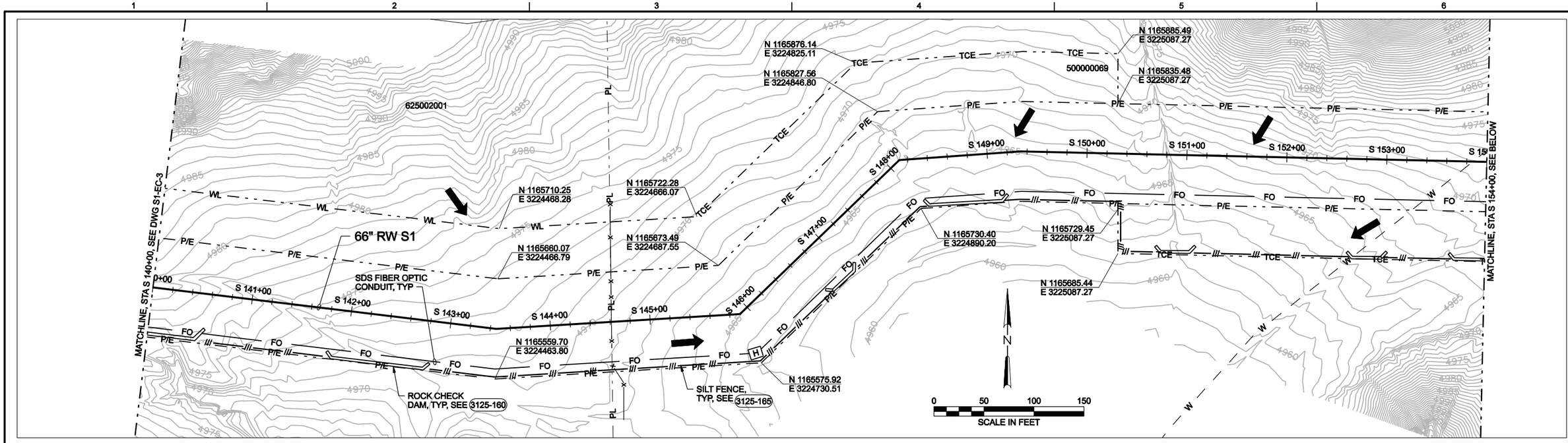

EROSION CONTROL PLAN, SEE S1-PP-5

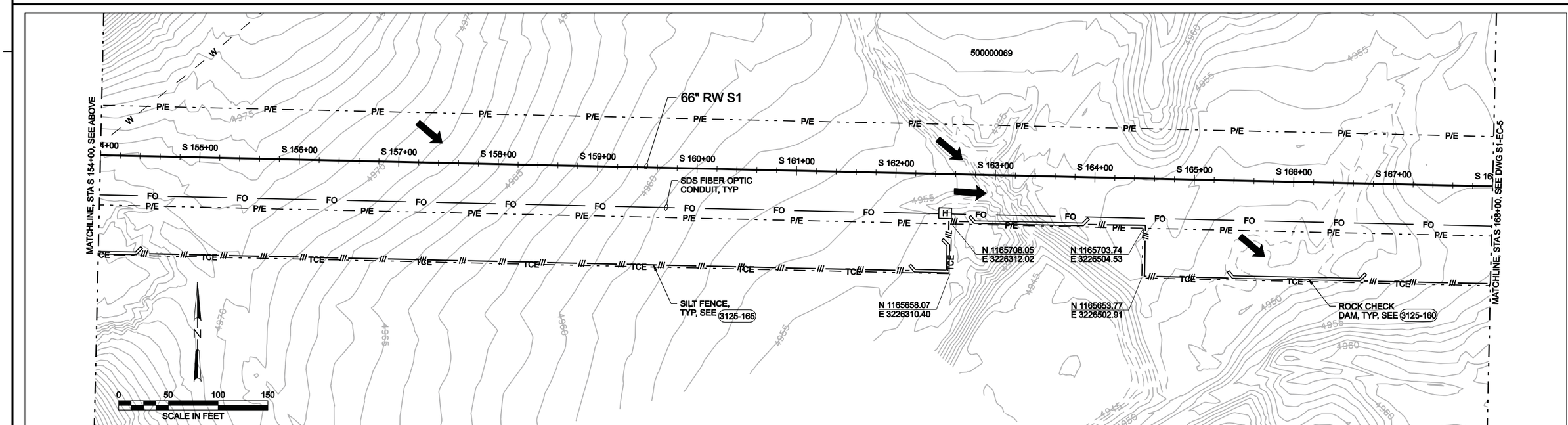

EROSION CONTROL PLAN, SEE S1-PP-6

COLORADO LICENSED PROFESSIONAL ENGINEER GARY L. HENRY 39310 6/30/11

DSGN	E FORD				
DR	B NORVILLE				
CHK	G SIMPSON				
APVD	J HENRY	NO.	DATE	REVISION	BY	APVD

VERIFY SCALE
BAR IS ONE INCH ON ORIGINAL DRAWING.
0 1"
IF NOT ONE INCH ON THIS SHEET, ADJUST SCALES ACCORDINGLY.

CH2MHILL
Colorado Springs, CO 80903

SOUTHERN DELIVERY SYSTEM
RAW WATER PIPELINE
SOUTH SECTION ONE

EROSION CONTROL AND EASEMENT PLANS

STATION S 140+00 TO STATION S 168+00

SHEET	52
DWG	S1-EC-4
DATE	JULY 2011
PROJ	171473.20.SP

Colorado Springs Utilities Project Number: SDS-002 CSU Work Order Number: 1146977

FILENAME: SP105nEC04d_171473.dgn PLOT DATE: 6/29/2011 PLOT TIME: 9:22:55 AM

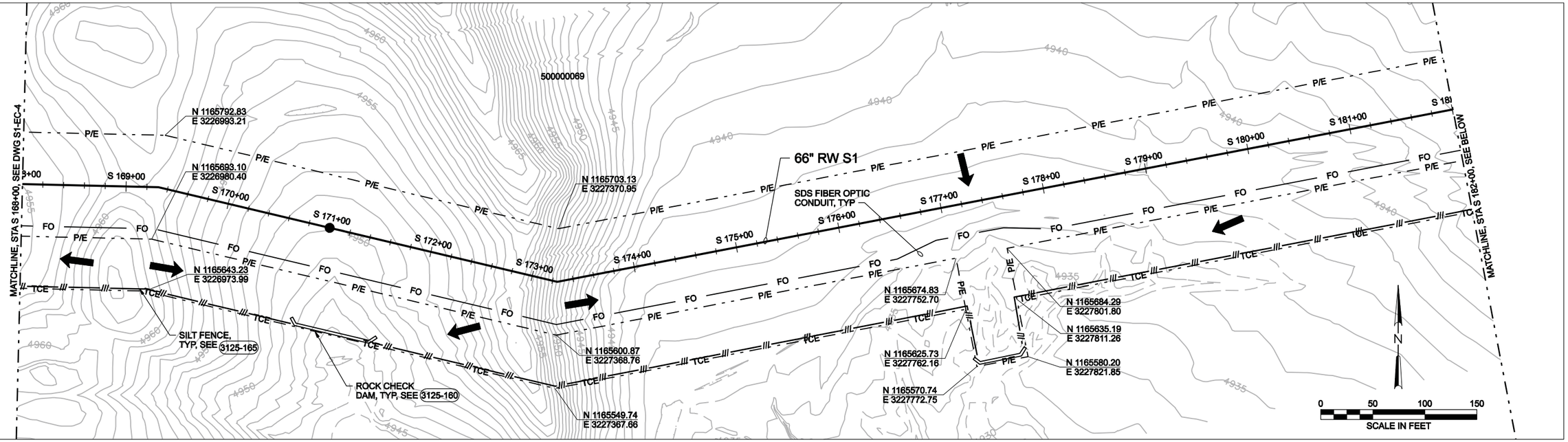

EROSION CONTROL PLAN, SEE S1-PP-7

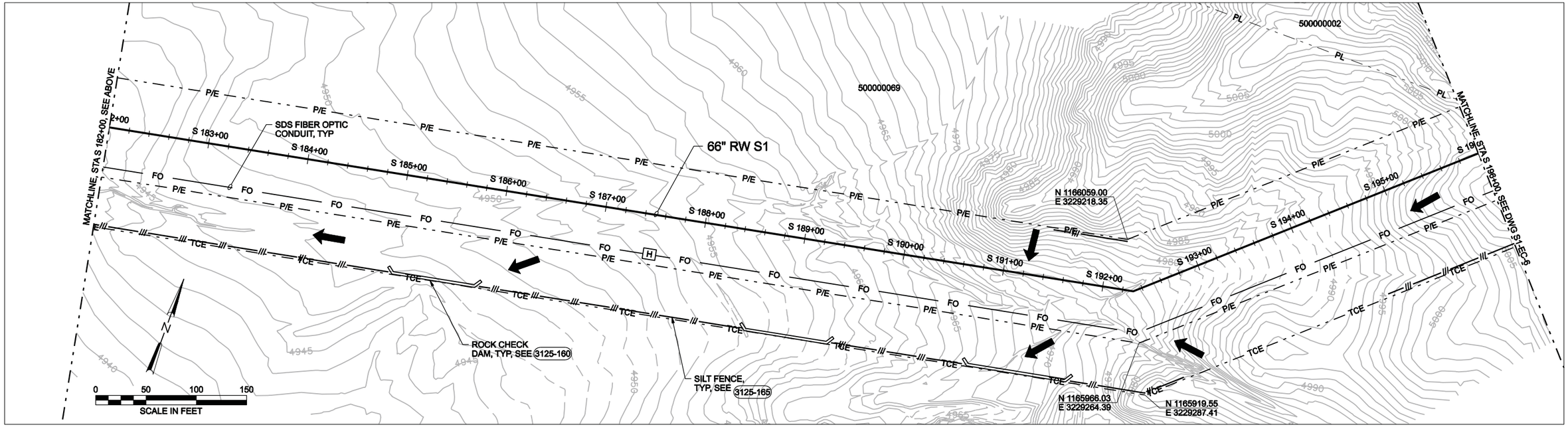

EROSION CONTROL PLAN, SEE S1-PP-8

COLORADO LICENSED
GODY L. HENRY
39310
6/30/11
PROFESSIONAL ENGINEER

DSGN	E FORD				
DR	B NORVILLE				
CHK	G SIMPSON				
APVD	J HENRY	NO.	DATE	REVISION	BY	APVD

VERIFY SCALE
BAR IS ONE INCH ON ORIGINAL DRAWING.
0 1"
IF NOT ONE INCH ON THIS SHEET, ADJUST SCALES ACCORDINGLY.

CH2MHILL
Colorado Springs, CO 80903

SOUTHERN DELIVERY SYSTEM
RAW WATER PIPELINE
SOUTH SECTION ONE

EROSION CONTROL AND EASEMENT PLANS

STATION S 168+00 TO STATION S 196+00

SHEET	53
DWG	S1-EC-5
DATE	JULY 2011
PROJ	171473.20.SP

Colorado Springs Utilities Project Number: SDS-002 CSU Work Order Number: 1146977

FILENAME: SP105nEC05d_171473.dgn PLOT DATE: 6/14/2011 PLOT TIME: 2:16:04 PM

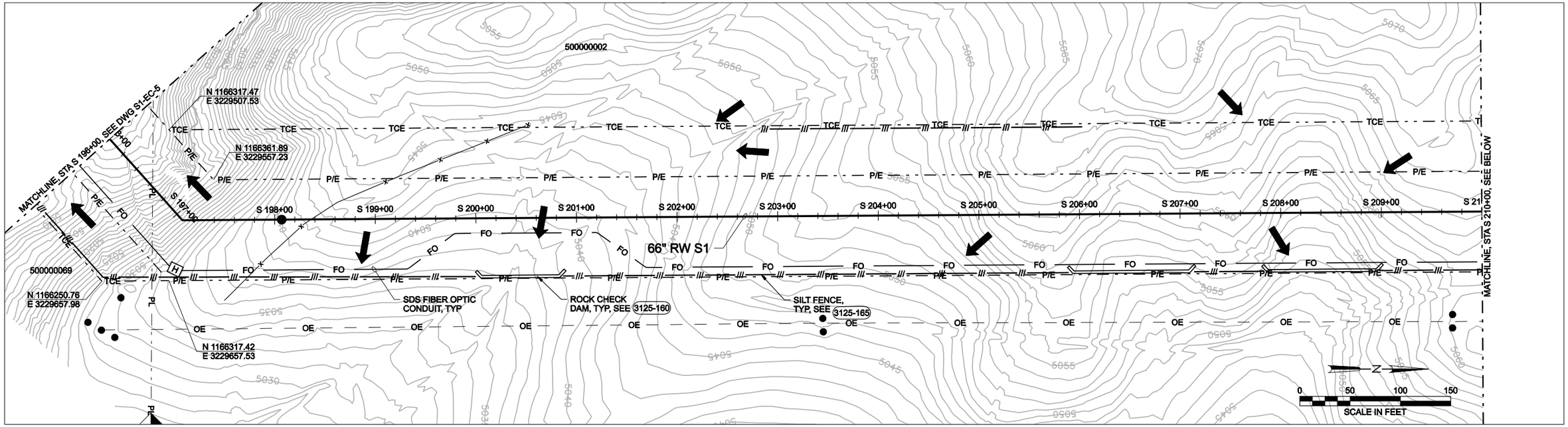

EROSION CONTROL PLAN, SEE S1-PP-9

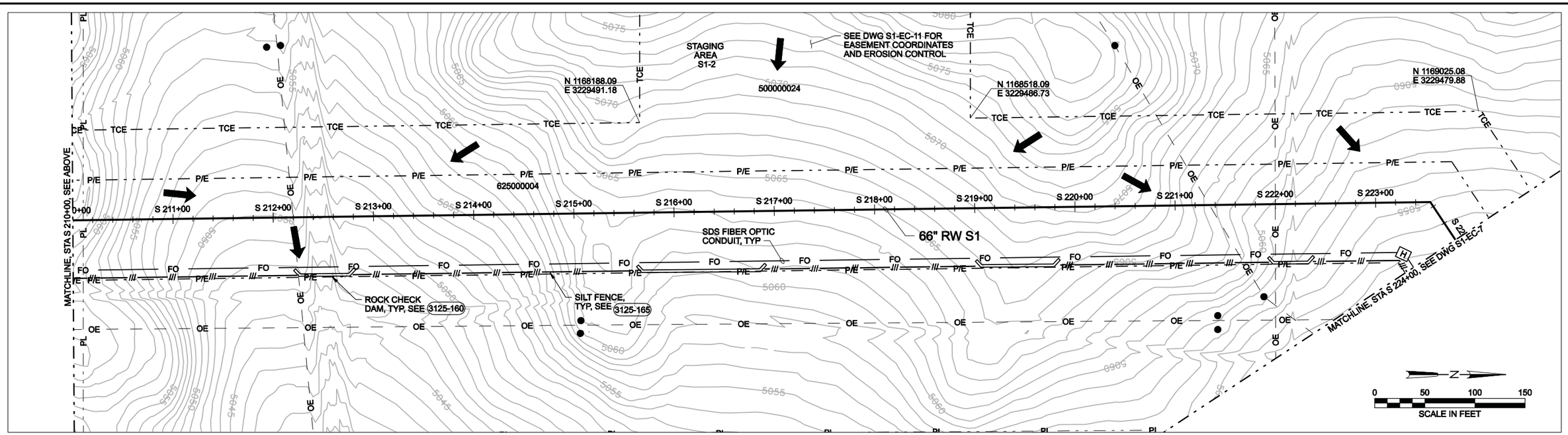

EROSION CONTROL PLAN, SEE S1-PP-10

COLORADO LICENSED
GARY L. HENRY
39310
6/30/11
PROFESSIONAL ENGINEER

DSGN	E FORD					
DR	B NORVILLE					
CHK	G SIMPSON					
APVD	J HENRY	NO.	DATE	REVISION	BY	APVD

VERIFY SCALE
BAR IS ONE INCH ON ORIGINAL DRAWING.
0 1"
IF NOT ONE INCH ON THIS SHEET, ADJUST SCALES ACCORDINGLY.

CH2MHILL
Colorado Springs, CO 80903

SOUTHERN DELIVERY SYSTEM
RAW WATER PIPELINE
SOUTH SECTION ONE

EROSION CONTROL AND EASEMENT PLANS

STATION S 196+00 TO STATION S 224+00

SHEET	54
DWG	S1-EC-6
DATE	JULY 2011
PROJ	171473.20.SP

Colorado Springs Utilities Project Number: SDS-002 CSU Work Order Number: 1146977

FILENAME: SP105nEC06d_171473.dgn PLOT DATE: 6/29/2011 PLOT TIME: 9:27:35 AM

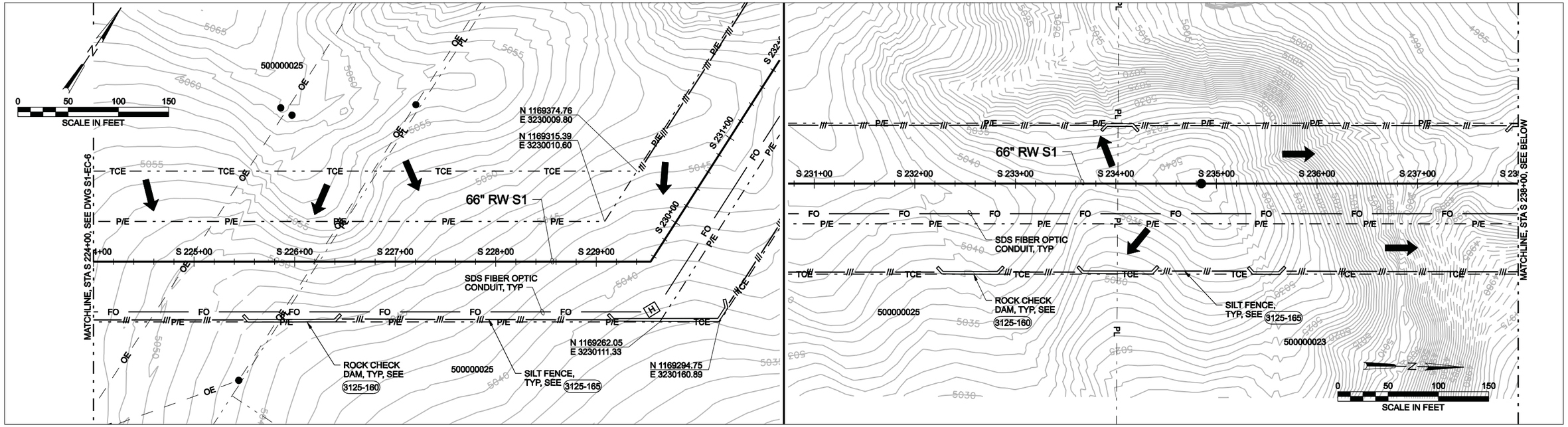

EROSION CONTROL PLAN, SEE S1-PP-11

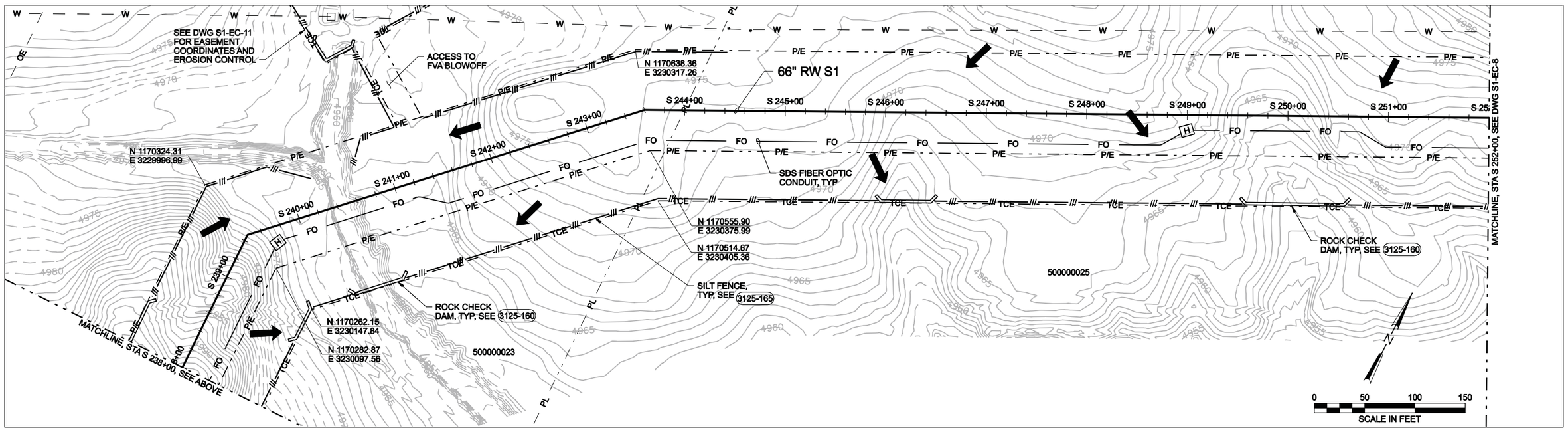

EROSION CONTROL PLAN, SEE S1-PP-12

COLORADO LICENSED PROFESSIONAL ENGINEER GARY L. HENRY 39310 6/30/11

DSGN	E FORD					
DR	B NORVILLE					
CHK	G SIMPSON					
APVD	J HENRY	NO.	DATE	REVISION	BY	APVD

VERIFY SCALE
BAR IS ONE INCH ON ORIGINAL DRAWING.
0 1"
IF NOT ONE INCH ON THIS SHEET, ADJUST SCALES ACCORDINGLY.

CH2MHILL
Colorado Springs, CO 80903

SOUTHERN DELIVERY SYSTEM
RAW WATER PIPELINE
SOUTH SECTION ONE

EROSION CONTROL AND EASEMENT PLANS

STATION S 224+00 TO STATION S 252+00

SHEET	55
DWG	S1-EC-7
DATE	JULY 2011
PROJ	171473.20.SP

Colorado Springs Utilities Project Number: SDS-002 CSU Work Order Number: 1146977

FILENAME: SP105nEC07d_171473.dgn PLOT DATE: 6/29/2011 PLOT TIME: 9:42:35 AM

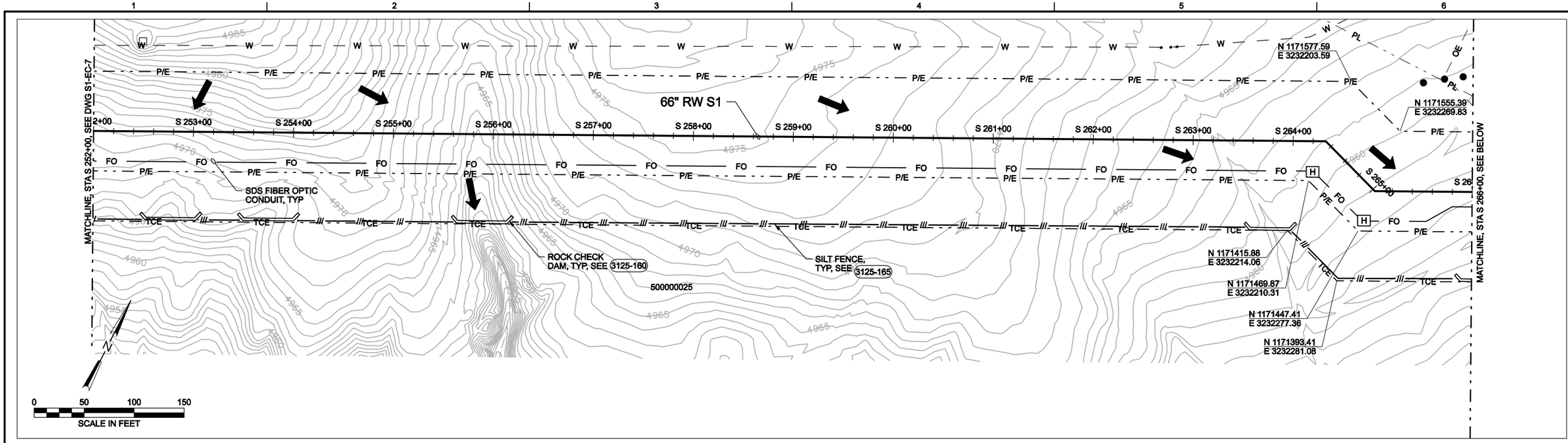

EROSION CONTROL PLAN, SEE S1-PP-13

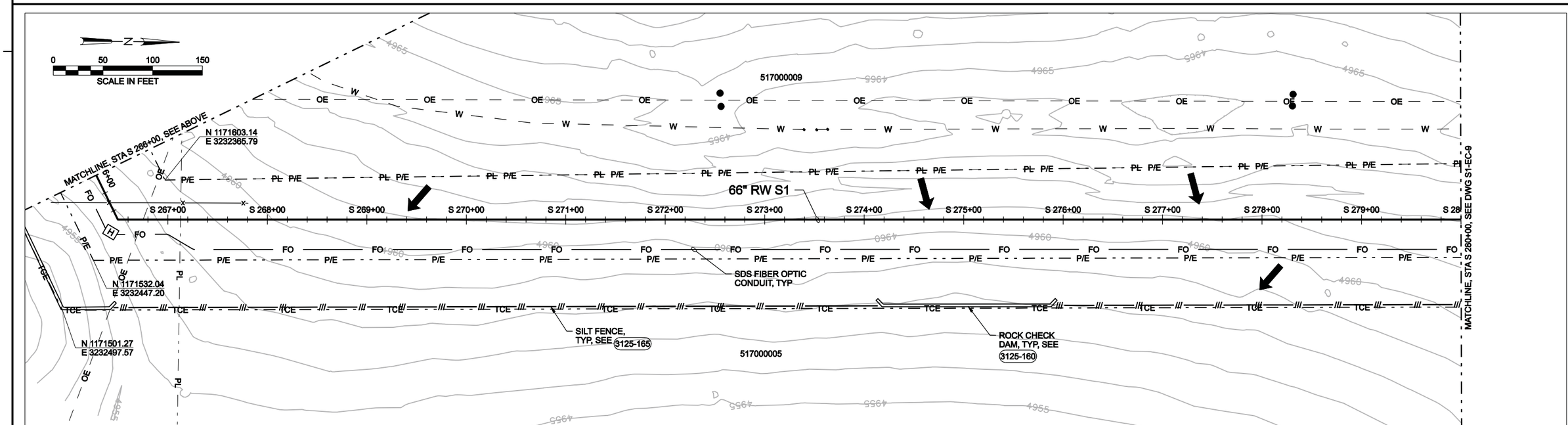

EROSION CONTROL PLAN, SEE S1-PP-14

COLORADO LICENSED PROFESSIONAL ENGINEER GARY L. HENRY 39310 6/30/11

DSGN	E FORD					
DR	B NORVILLE					
CHK	G SIMPSON					
APVD	J HENRY	NO.	DATE	REVISION	BY	APVD

VERIFY SCALE
BAR IS ONE INCH ON ORIGINAL DRAWING.
0 1"
IF NOT ONE INCH ON THIS SHEET, ADJUST SCALES ACCORDINGLY.

CH2MHILL
Colorado Springs, CO 80903

SOUTHERN DELIVERY SYSTEM
RAW WATER PIPELINE
SOUTH SECTION ONE

EROSION CONTROL AND EASEMENT PLANS

STATION S 252+00 TO STATION S 280+00

SHEET	56
DWG	S1-EC-8
DATE	JULY 2011
PROJ	171473.20.SP

Colorado Springs Utilities Project Number: SDS-002 CSU Work Order Number: 1146977

FILENAME: SP105nEC08d_171473.dgn PLOT DATE: 6/15/2011 PLOT TIME: 8:48:01 AM

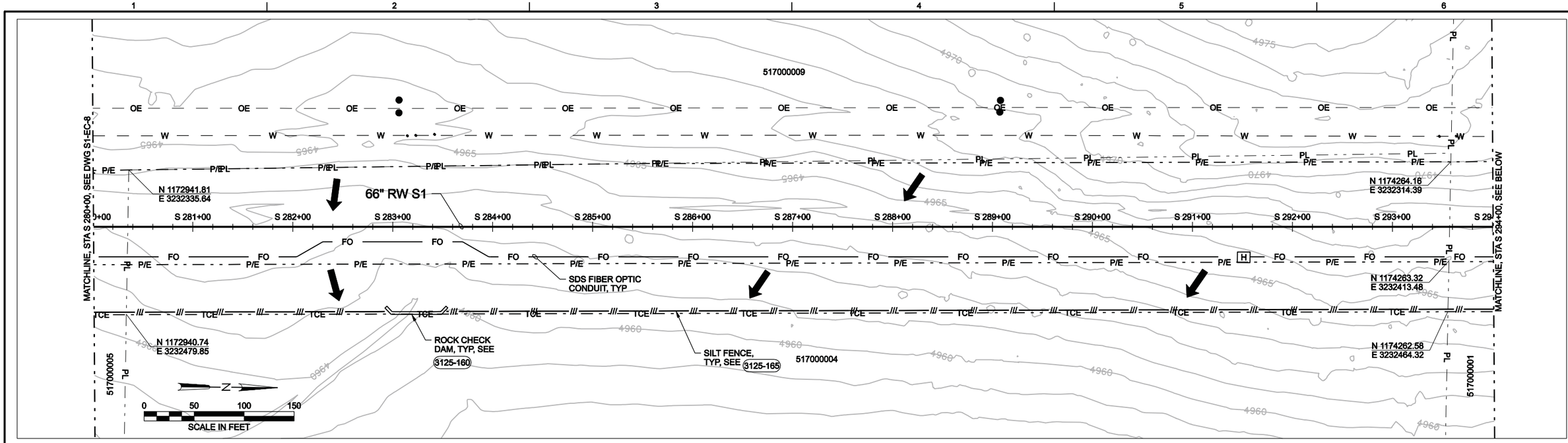

EROSION CONTROL PLAN, SEE S1-PP-15

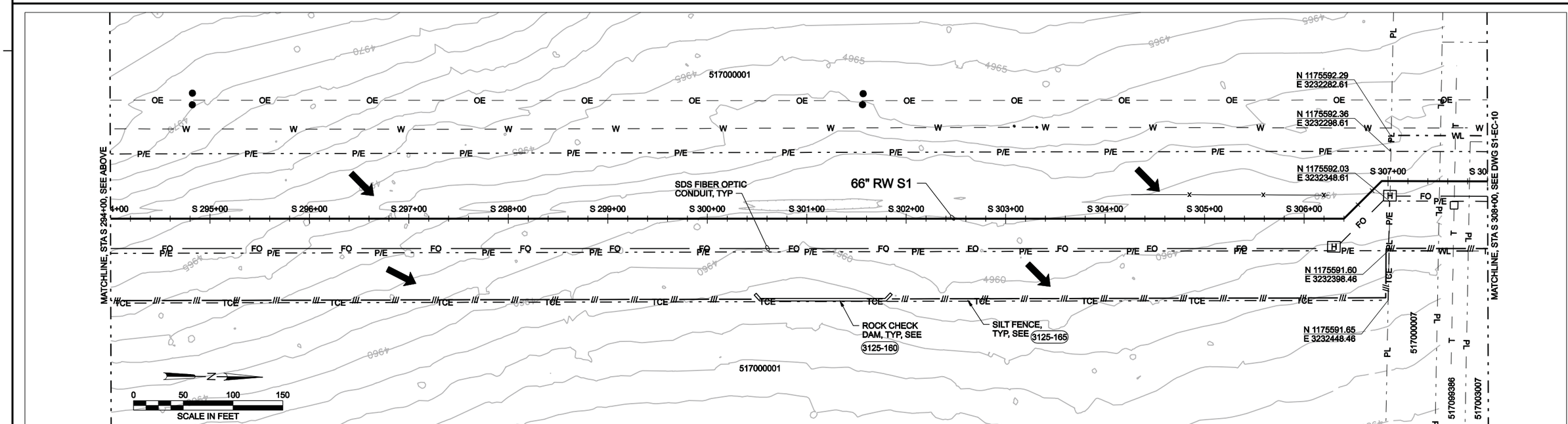

EROSION CONTROL PLAN, SEE S1-PP-16

COLORADO LICENSED PROFESSIONAL ENGINEER GARY L. HENRY 39310 6/30/11

DSGN	E FORD					
DR	B NORVILLE					
CHK	G SIMPSON					
APVD	J HENRY	NO.	DATE	REVISION	BY	APVD

VERIFY SCALE
BAR IS ONE INCH ON ORIGINAL DRAWING.
0 1"
IF NOT ONE INCH ON THIS SHEET, ADJUST SCALES ACCORDINGLY.

CH2MHILL
Colorado Springs, CO 80903

SOUTHERN DELIVERY SYSTEM
RAW WATER PIPELINE
SOUTH SECTION ONE

EROSION CONTROL AND EASEMENT PLANS

STATION S 280+00 TO STATION S 308+00

SHEET	57
DWG	S1-EC-9
DATE	JULY 2011
PROJ	171473.20.SP

Colorado Springs Utilities Project Number: SDS-002 CSU Work Order Number: 1146977

FILENAME: SP105nEC09d_171473.dgn PLOT DATE: 6/29/2011 PLOT TIME: 9:46:43 AM

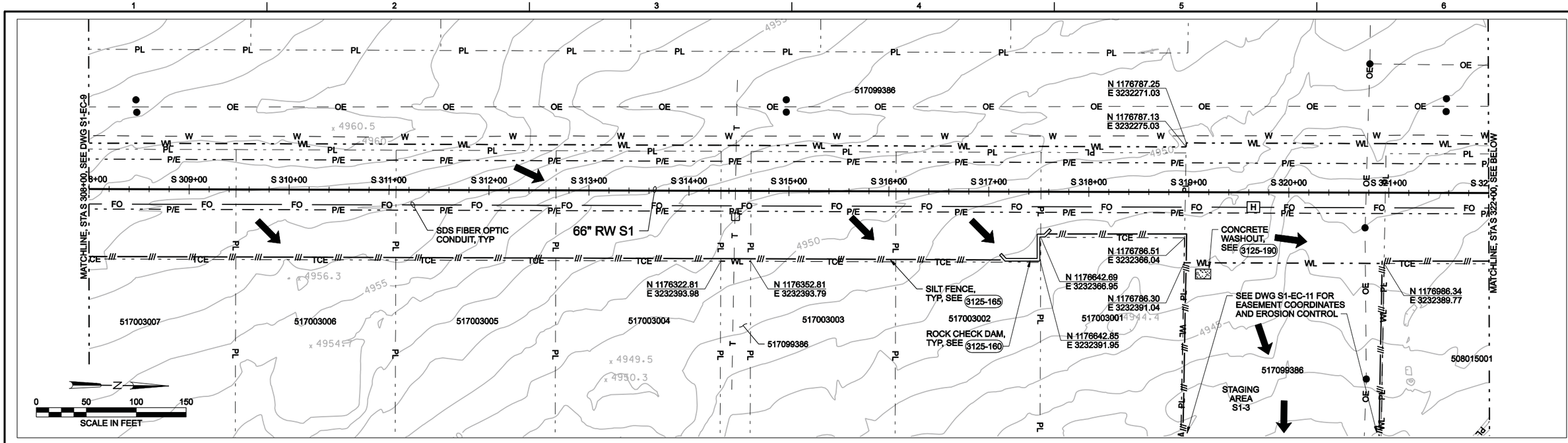

EROSION CONTROL PLAN, SEE S1-PP-17

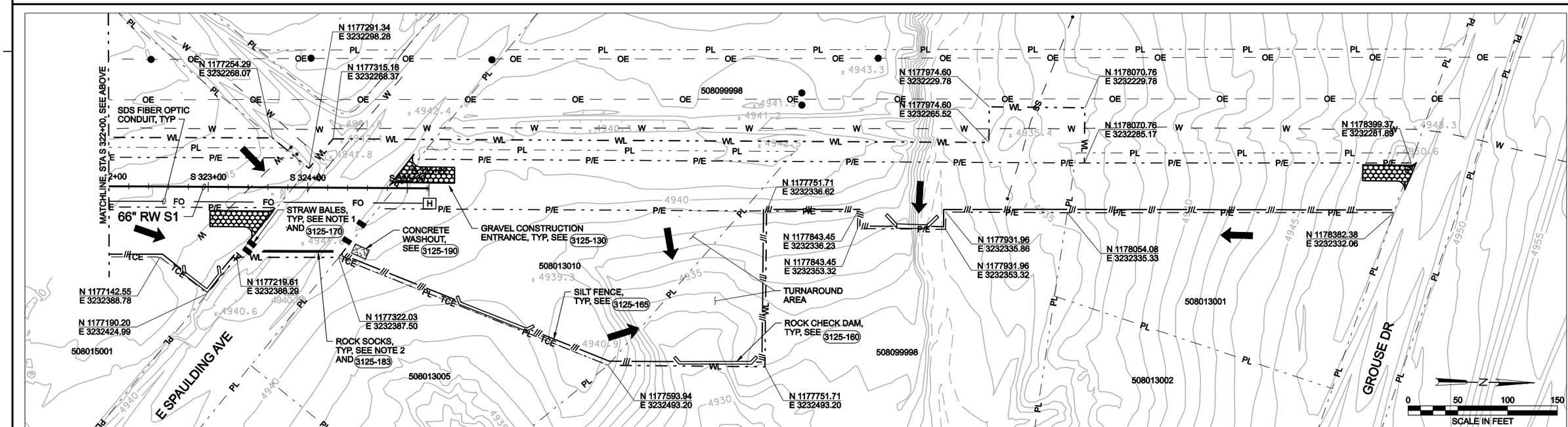

EROSION CONTROL PLAN, SEE S1-PP-18

NOTES:

1. INSTALL STRAW BALES WITHIN ROADWAY FLOW DITCHES.
2. INSTALL ROCK SOCKS ONLY WHEN CONTRACTOR OPERATIONS OCCUR WITHIN ROAD RIGHT-OF-WAY.

COLORADO LICENSED PROFESSIONAL ENGINEER — GARY L. HENRY — 39310 — 6/30/11

DSGN	E FORD					
DR	B NORVILLE					
CHK	G SIMPSON					
APVD	J HENRY	NO.	DATE	REVISION	BY	APVD

VERIFY SCALE
BAR IS ONE INCH ON ORIGINAL DRAWING.
0 1"
IF NOT ONE INCH ON THIS SHEET, ADJUST SCALES ACCORDINGLY.

CH2MHILL
Colorado Springs, CO 80903

SOUTHERN DELIVERY SYSTEM
RAW WATER PIPELINE
SOUTH SECTION ONE

EROSION CONTROL AND EASEMENT PLANS

STATION S 308+00 TO POE STATION S 325+21.87

SHEET	58
DWG	S1-EC-10
DATE	JULY 2011
PROJ	171473.20.SP

Colorado Springs Utilities Project Number: SDS-002 CSU Work Order Number: 1146977

FILENAME: SP105nEC10d_171473.dgn PLOT DATE: 6/29/2011 PLOT TIME: 10:01:07 AM

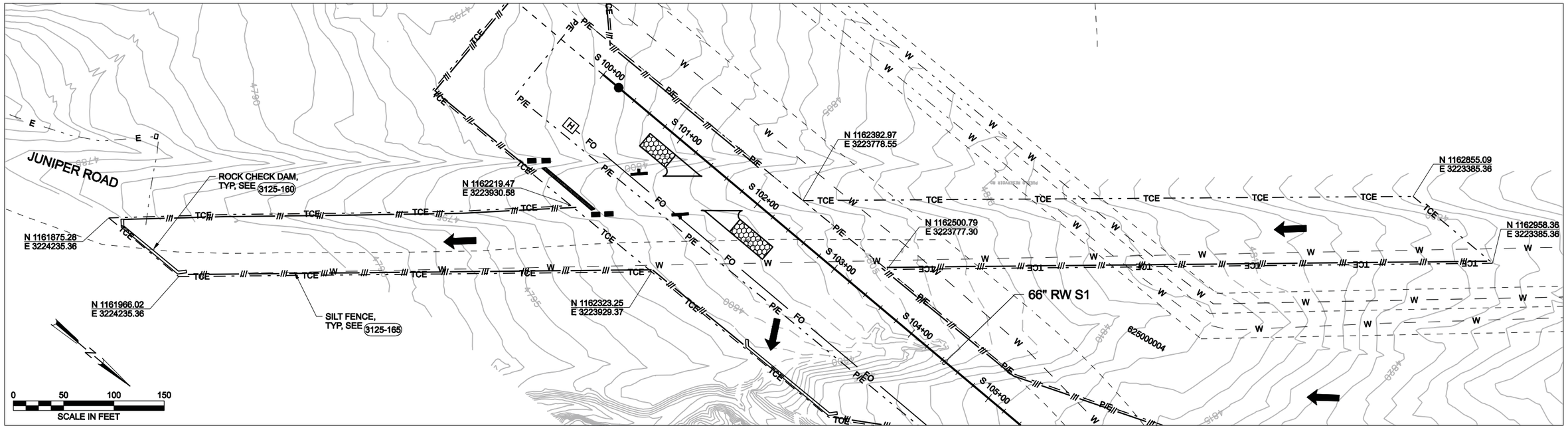

PARTIAL EASEMENT PLAN, SEE S1-PP-1

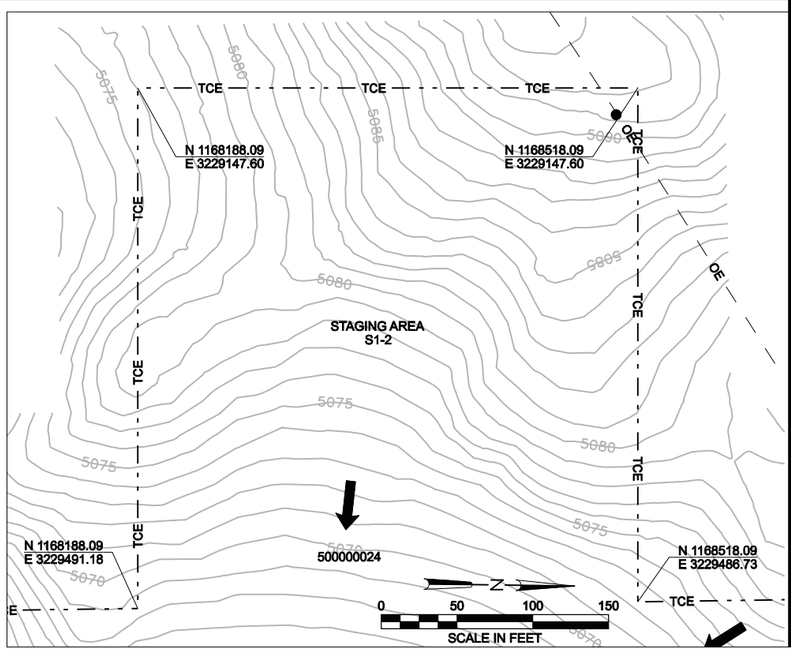

PARTIAL EASEMENT PLAN, SEE S1-PP-10

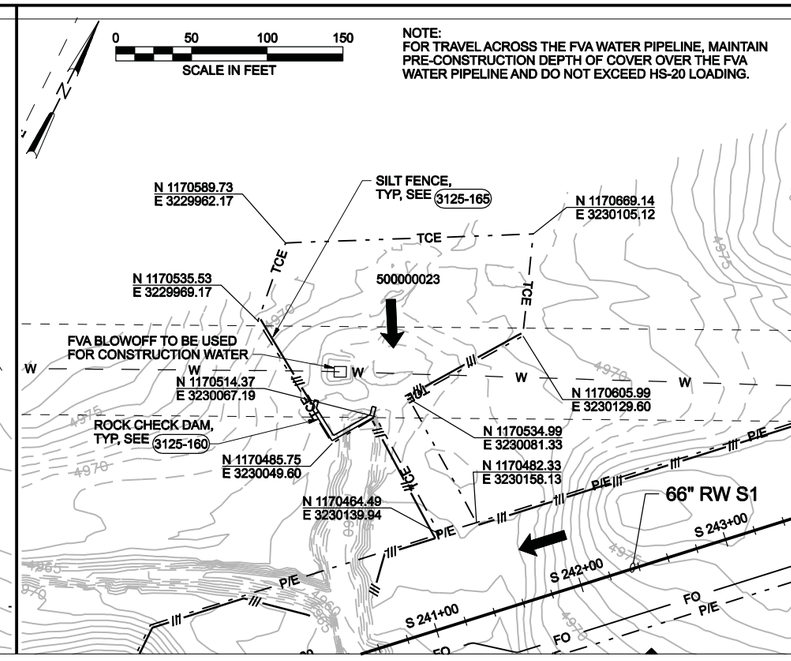

PARTIAL EASEMENT PLAN, SEE S1-PP-12

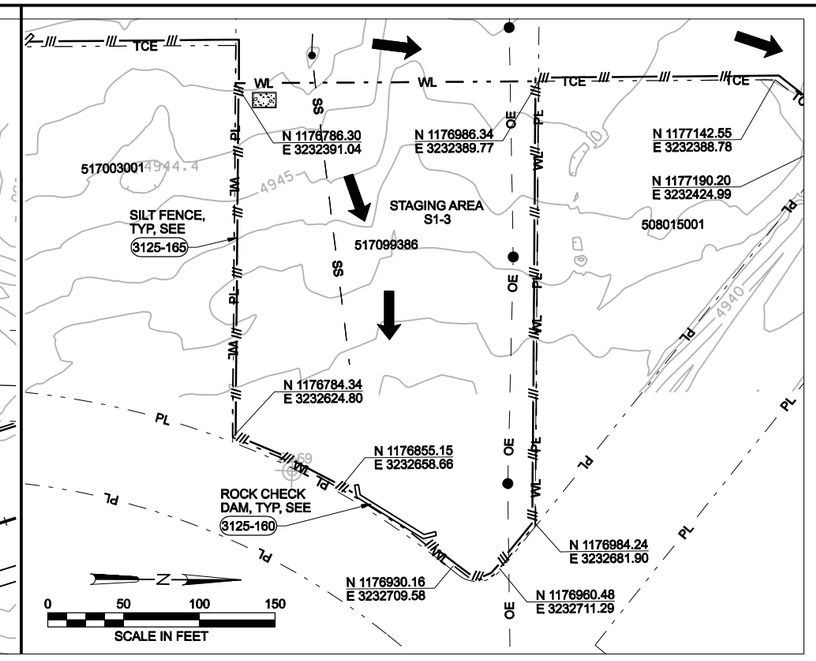

PARTIAL EASEMENT PLAN, SEE S1-PP-17

COLORADO LICENSED
CODY L. HENRY
39310
6/30/11
PROFESSIONAL ENGINEER

DSGN	E FORD				
DR	B NORVILLE				
CHK	G SIMPSON				
APVD	J HENRY	NO.	DATE	REVISION	BY	APVD

VERIFY SCALE
BAR IS ONE INCH ON ORIGINAL DRAWING.
0 1"
IF NOT ONE INCH ON THIS SHEET, ADJUST SCALES ACCORDINGLY.

CH2MHILL
Colorado Springs, CO 80903

SOUTHERN DELIVERY SYSTEM
RAW WATER PIPELINE
SOUTH SECTION ONE

EROSION CONTROL AND EASEMENT PLANS

MISCELLANEOUS PARTIAL PLANS

SHEET	59
DWG	S1-EC-11
DATE	JULY 2011
PROJ	171473.20.SP

Colorado Springs Utilities Project Number: SDS-002 CSU Work Order Number: 1146977

FILENAME: SP105nEC11d_171473.dgn PLOT DATE: 6/29/2011 PLOT TIME: 10:04:54 AM

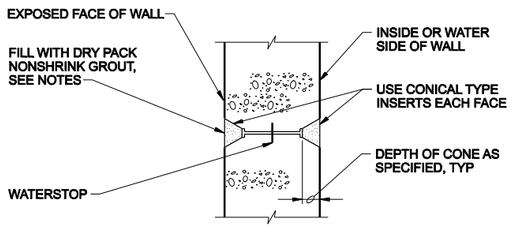

NOTES:

1. THE SPACING OF FORM TIES ON EXPOSED PORTIONS OF WALLS SHALL BE APPROXIMATELY EQUAL HORIZONTALLY AND VERTICALLY AND SHALL BE UNIFORM IN EACH DIRECTION.
2. DRY PACK METHOD SHALL BE AS SPECIFIED USING STEEL TOOLS.

FORM SNAP-TIE HOLE

NTS

0310-051

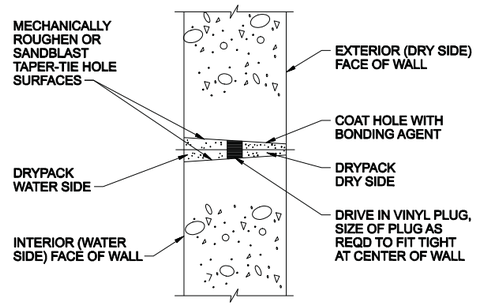

NOTE:

MINIMUM HOLE DIAMETER AT EXTERIOR FACE = 1". TAPER HOLE SO THAT MINIMUM HOLE DIAMETER AT INTERIOR FACE = 1 1/4"

CONSTRUCTION STEPS:

1. SANDBLAST OR MECHANICALLY ROUGHEN WITH ELECTRIC EQUIPMENT.
2. DRIVE IN VINYL PLUG.
3. COAT HOLE ON DRY SIDE OF PLUG AND WHILE BONDING AGENT IS TACKY, DRYPACK.
4. COAT HOLE ON WATER SIDE OF PLUG AND WHILE BONDING AGENT IS TACKY, DRYPACK.
5. USE CATEGORY II, NON-SHRINK GROUT AS SPECIFIED.

ALTERNATE FORM TIE - THROUGH BOLT

NTS

0310-052

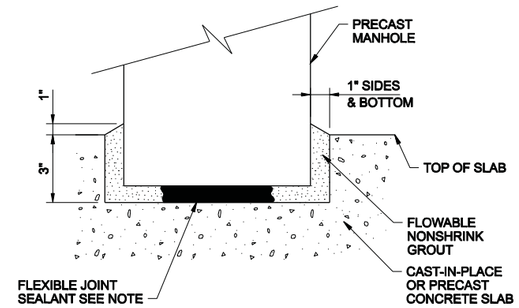

NOTE: INSTALL FLEXIBLE JOINT SEALANT PRIOR TO SETTING FIRST MANHOLE SECTION.

PRECAST MANHOLE POCKET

NTS

0315-900

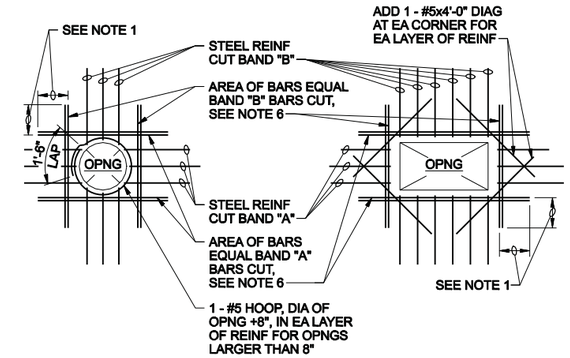

NOTES:

1. PROVIDE MINIMUM LAP, SEE GENERAL STRUCTURAL NOTES.
2. TYPICAL FOR OPENINGS IN CONCRETE WALLS OF BELOW GRADE AND HYDRAULIC STRUCTURES AND STRUCTURAL CONCRETE SLABS UNLESS INDICATED OTHERWISE ON PLANS.
3. DO NOT WELD REINFORCEMENT TO PIPE SLEEVES AND INSERTS.
4. PROVIDE A MINIMUM OF 2 "A" BARS AND 2 "B" BARS EACH SIDE OF OPENING (1 EACH FACE).
5. FOR OPENINGS LARGER THAN 8'-0", REINFORCE SAME AS 8'-0" OPENINGS.
6. SPACE AT 3 BAR DIAMETERS (OR 3" MINIMUM) ON CENTER.

OPENING REINFORCING

NTS

0330-001

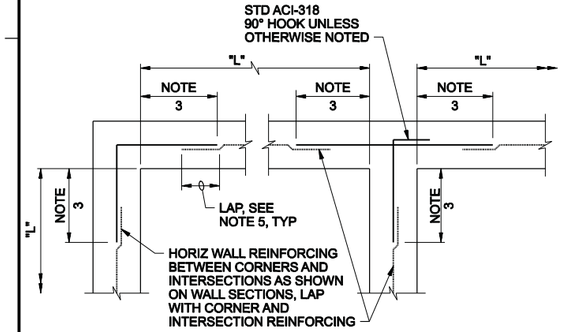

SINGLE REINFORCING MAT

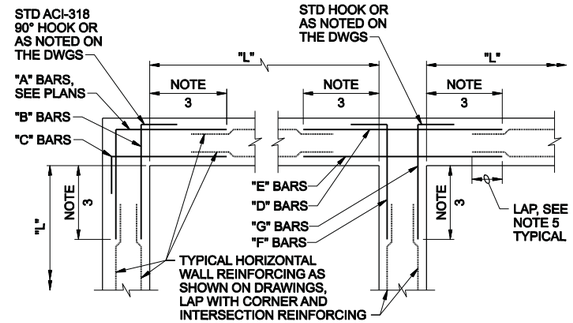

DOUBLE REINFORCING MAT

NOTES:

1. TYPICAL HORIZONTAL WALL CORNER AND INTERSECTION REINFORCING LAYOUT IS SHOWN TO AVOID CONGESTION AND PERMIT PROPER PLACEMENT, FOR SIZE AND SPACING SEE PLANS. HORIZONTAL REINFORCING AT CORNERS AND INTERSECTIONS SHALL BE FABRICATED AND INSTALLED WITH SPLICES LOCATED WHERE SHOWN REGARDLESS OF BAR SIZE AND SPACING.
2. WHERE THE CORNER OR INTERSECTION REINFORCING SIZE AND SPACING IS NOT SHOWN, NOTED OR TABULATED ON THE PLANS, THE SIZE AND SPACING SHALL BE THE SAME AS THE WALL HORIZONTAL REINFORCING SHOWN ON THE WALL SECTIONS OR AS NOTED FOR THE REINFORCING BETWEEN THE CORNERS OR INTERSECTIONS.
3. EXCEPT WHERE OTHERWISE SHOWN ON THE DRAWINGS, THE LENGTH INDICATED AS "NOTE 3" SHALL BE THE LESSER OF L/4, 10 FEET, OR 1.0 TIMES THE HEIGHT OF THE WALL, EXCEPT THAT IN NO CASE SHALL IT BE LESS THAN 2 FEET.
4. L = LENGTH OF WALL PARALLEL TO THE BAR LENGTH IN QUESTION.
5. EXCEPT WHERE OTHERWISE SHOWN ON THE DRAWINGS, THE LENGTH INDICATED AS "NOTE 5" SHALL BE EQUAL TO ONE "LAP LENGTH" AS REQUIRED BY THE GENERAL STRUCTURAL NOTES. USE THE LAP LENGTH AS REQUIRED FOR THE SMALLER OF THE TWO REINFORCING BARS BEING SPLICED.
6. UNLESS OTHERWISE NOTED, "B" AND "C" BARS ARE THE SAME SIZE AND SPACING AND, "F" AND "G" BARS ARE THE SAME SIZE AND SPACING.

TYPICAL WALL CORNER AND INTERSECTION REINFORCING

NTS

0330-003

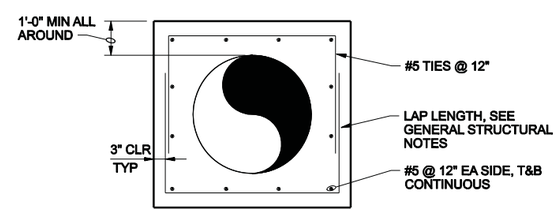

NOTES:

1. APPLIES TO ALL PIPE SIZES.

PIPE ENCASEMENT

NTS

0330-017A

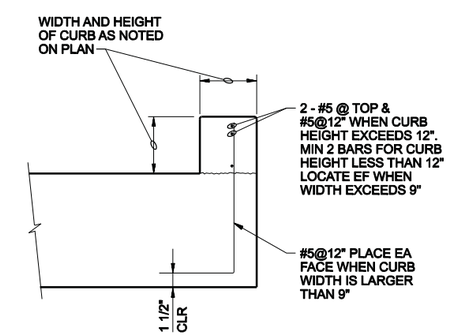

CONCRETE CURB

NTS

0330-080

COLORADO LICENSED PROFESSIONAL ENGINEER CODY L. HENRY 39310 6/30/11

DSGN	E FORD						
DR	B NORVILLE						
CHK	G SIMPSON						
APVD	J HENRY	NO.	DATE	REVISION	BY	APVD	

VERIFY SCALE
BAR IS ONE INCH ON ORIGINAL DRAWING.
0 1"
IF NOT ONE INCH ON THIS SHEET, ADJUST SCALES ACCORDINGLY.

CH2MHILL
Colorado Springs, CO 80903

SOUTHERN DELIVERY SYSTEM
RAW WATER PIPELINE
SOUTH SECTION ONE

STANDARD DETAILS

STANDARD DETAILS

SHEET	60
DWG	S1-SD-1
DATE	JULY 2011
PROJ	171473.20.SP

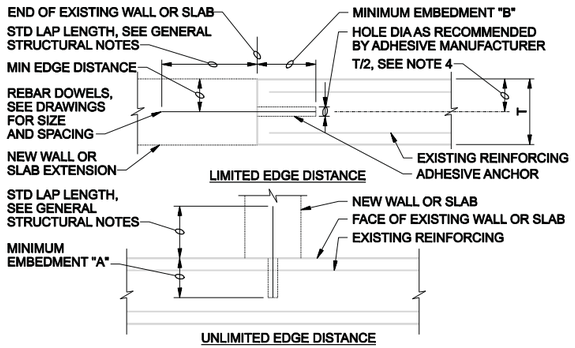

DOWEL SIZE	MINIMUM EDGE DIST	MINIMUM EMBEDMENT A	MINIMUM EMBEDMENT B
#3	2 1/2"	5"	8"
#4	3 1/2"	7"	11"
#5	4"	8"	13"
#6	5"	10 1/2"	16"
#7	6"	12 1/2"	20"
#8	7"	14"	22"
#9	7 1/2"	15"	24"

NOTES:

1. CONFORM TO THE REQUIREMENTS OF SPECIFICATION SECTION 03 63 00, CONCRETE DOWELING.
2. FOLLOW ADHESIVE MANUFACTURER'S INSTRUCTIONS FOR INSTALLATION.
3. USE MINIMUM EMBEDMENTS SHOWN, EXCEPT USE MANUFACTURER'S MINIMUM RECOMMENDED EMBEDMENT IF GREATER.
4. LOCATE DOWELS CENTERED IN WALL OR SLAB UNLESS OTHERWISE NOTED ON DRAWINGS. WHERE 2 ROWS OF DOWELS INDICATED, STAGGER SPACING & LOCATE ALTERNATING DOWELS AT MINIMUM EDGE DISTANCE FROM OPPOSITE FACES.

ADHESIVE DOWEL

NTS

0330-105

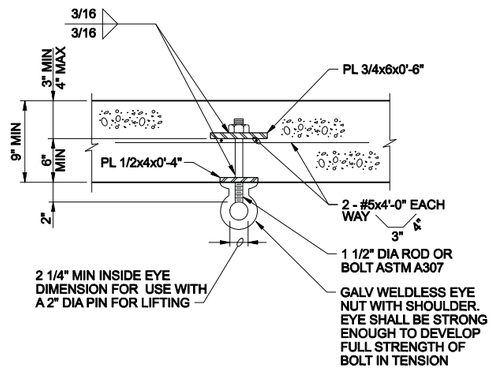

TYPE 2

NOTES:

1. MAXIMUM LOAD RATING FOR LIFTING EYE 5000 LBS.
2. SUBMIT DATA ON EYE BOLT WITH SHOP DRAWINGS.

LIFTING EYE - TYPE 2

NTS

0512-121

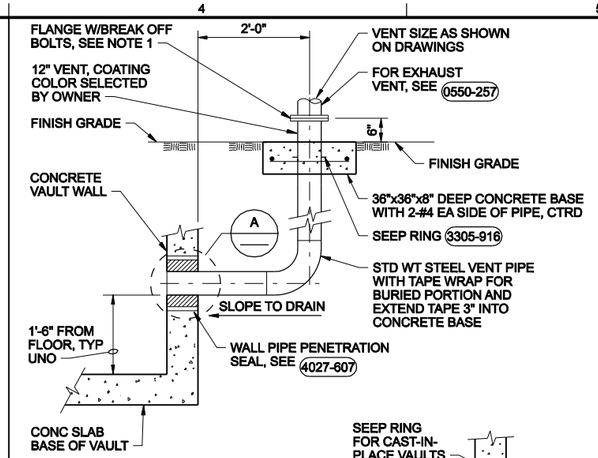

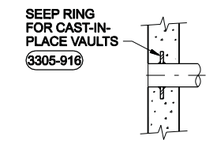

NOTE:

1. INSTALL FLANGE WITH BREAK OFF BOLTS ONLY WHERE SHOWN ON VAULT DETAILS. FLANGES SHALL BE DRILLED FOR EIGHT EQUALLY SPACED 1/2 INCH DIAMETER BOLTS PER AWWA REQUIREMENTS EXCEPT WHERE NUMBER OF BOLTS AND BOLT DIAMETER CONFLICT. FLANGE CONNECTION SHALL BE MADE WITH EIGHT 1/2 INCH DIAMETER CARBON STEEL BOLTS, NUTS AND ASTM FU36 WASHERS AS SPECIFIED. COAT AS SPECIFIED.

A VENT FOR CAST-IN-PLACE CONCRETE STRUCTURES

NTS

VENT FOR PRECAST & CAST-IN-PLACE CONCRETE STRUCTURES

NTS

0550-256

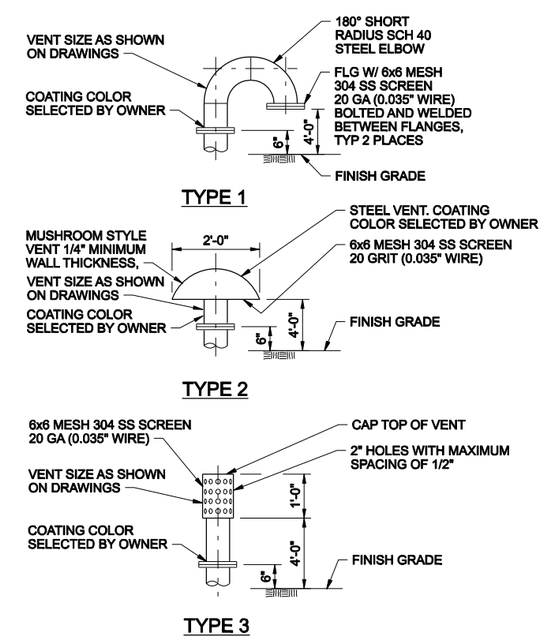

EXHAUST VENT

NTS

0550-257

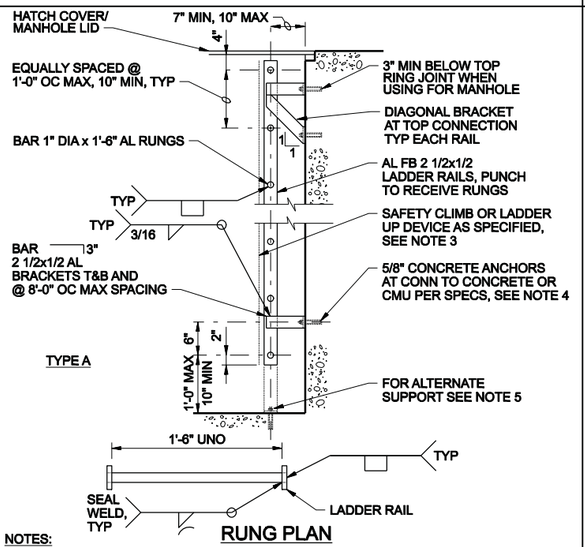

RUNG PLAN

NOTES:

1. ALUMINUM IN CONTACT WITH CONCRETE SHALL BE COATED WITH BITUMASTIC COATING.
2. AT CONTRACTOR'S OPTION, PRE-ENGINEERED PIPE LADDER AS SPECIFIED MAY BE USED IN LIEU OF FLAT BAR LADDERS.
3. PROVIDE LADDER SAFETY POST AND FALL PROTECTION SYSTEMS AS SPECIFIED.
4. PROVIDE SST CONCRETE ANCHORS LOCATED BELOW MAXIMUM WATER SURFACE.
5. FOR INTERIOR, DRY AREAS, EXTEND RAILS AND BEND 3" AT FLOOR. SECURE WITH 5/8" CONCRETE ANCHORS.

FLAT BAR LADDER UNDERCOVER - ALUMINUM

NTS

0551-101

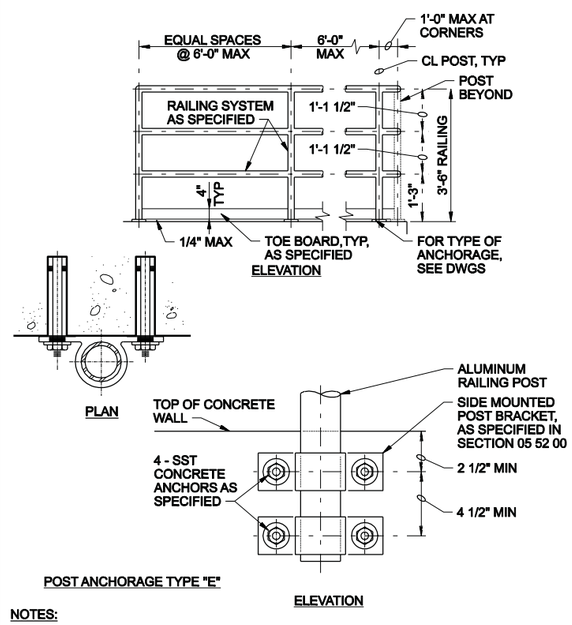

NOTES:

1. PROVIDE PROTECTION FOR DISSIMILAR METALS AND CONCRETE PER SPECIFICATIONS.
2. USE SIDE MOUNTED POST BRACKET AS A TEMPLATE FOR THE ANCHOR BOLTS.

RAILING - THREE RAIL - ALUMINUM

NTS

0552-001

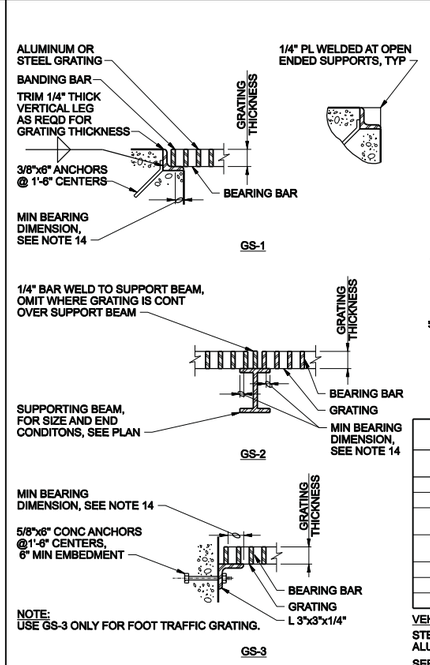

NOTE:
USE GS-3 ONLY FOR FOOT TRAFFIC GRATING.

STANDARD GRATING

NTS

GENERAL NOTES:

1. EXTEND GRATING CONTINUOUSLY OVER GATE GUIDES AND GATES.
2. NOTCH GRATING SUPPORTS AT GATES AS REQUIRED.
3. GRATING SPAN ⟷ SEE PLAN.
4. WIDTH OF GRATING SECTIONS SHALL NOT EXCEED 3'-0".
5. SHOP DRAWINGS BASED ON FIELD DIMENSIONS SHALL BE SUBMITTED TO THE ENGINEER PRIOR TO FABRICATION.
6. MATERIAL FOR SUPPORTS OF STEEL AND ALUMINUM GRATING TO BE SAME AS GRATING, EXCEPT METAL SUPPORTS THAT ARE TO BE EMBEDDED IN CONCRETE SHALL BE TYPE 316 STAINLESS STEEL.
7. UNLESS NOTED OTHERWISE ON PLANS, GRATING THICKNESS SHALL BE AS TABULATED IN "GRATING THICKNESS TABLE" FOR APPLICABLE TRAFFIC.
8. BEARING BAR THICKNESS FOR GRATING TO BE 3/16" MINIMUM.
9. BAND ALL EDGES WITH 3/16 x DEPTH OF BEARING BAR.
10. PROVIDE MISCELLANEOUS GRATING FASTENERS AS REQUIRED.
11. TYPE OF MATERIAL USED SHALL BE AS SHOWN ON PLANS OR AS SPECIFIED. THIS STANDARD DETAIL INCLUDES 2 TYPES, ALTHOUGH BOTH MAY NOT BE INCLUDED IN PROJECT.
12. THE HORIZONTAL CLEARANCE BETWEEN THE GRATING AND GRATING SUPPORTS SHALL NOT BE LESS THAN 1/4" NOR GREATER THAN 1/2" AND AS SPECIFIED.
13. ALL GRATING SECTIONS, WHEN IN PLACE, SHALL ALWAYS BE FIRMLY ANCHORED TO THEIR SUPPORTS AS SPECIFIED.
14. MIN BEARING HORIZONTAL DIMENSION = 1" FOR GRATING DEPTH 2 1/4" OR LESS, MIN BEARING HORIZONTAL = 2" FOR GRATING DEPTH GREATER THAN 2 1/4"

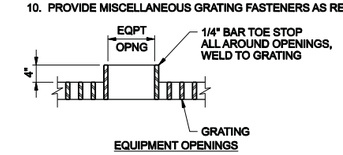

EQUIPMENT OPENINGS

FOOT TRAFFIC
GRATING THICKNESS TABLE

MAXIMUM SPAN	ALUMINUM	STEEL
3'-6"	1 1/4"	1"
4'-0"	1 1/2"	1"
4'-6"	1 3/4"	1"
5'-0"	1 3/4"	1 1/4"
5'-6"	2"	1 1/4"
6'-0"	2 1/4"	1 1/2"
6'-6"	2 1/4"	1 1/2"
7'-0"	2 1/2"	1 3/4"

HEAVY VEHICULAR TRAFFIC
(HS 20-44)

MAXIMUM SPAN	STEEL	ALUMINUM
1'-0"	2"x3/16"	DO NOT USE ALUMINUM GRATING
1'-8"	2 1/2"x1/4"	
2'-0"	2 1/2"x3/8" OR 3"x1/4"	
2'-6"	3"x3/8" OR 4"x1/4"	
3'-3"	3 1/2"x3/8"	
4'-0"	4"x3/8"	
5'-0"	4 1/2"x3/8"	

LIGHT VEHICULAR TRAFFIC
(WHEEL LOAD = 2000 POUNDS OR LESS)

MAXIMUM SPAN	STEEL	ALUMINUM
1'-0"	1 3/4"x3/16"	1 3/4"x3/16"
1'-6"	1 3/4"x3/16"	1 3/4"x3/16"
2'-0"	2"x3/16"	2"x3/16"
2'-6"	2 1/4"x3/16"	2 1/4"x3/16"
3'-0"	2 1/2"x3/16"	2 1/2"x3/16"
4'-0"	2 1/2"x1/4"	DO NOT USE ALUMINUM GRATING
5'-0"	2 1/2"x3/8"	
6'-0"	2 1/2"x3/8"	
7'-0"	3"x3/8"	

VEHICULAR TRAFFIC NOTE:

STEEL GRATING BEARING BARS FOR VEHICULAR TRAFFIC SHALL BE SPACED AT 1 7/8" OC; ALUMINUM GRATING BEARING BARS FOR VEHICULAR TRAFFIC SHALL BE SPACED AT 1 3/16" OC.

SERRATED BEARING BARS:

INCREASE GRATING THICKNESSES SHOWN IN TABLES BY 1/4" FOR GRATING WITH SERRATED SLIP RESISTANT SURFACES.

0553-001

COLORADO LICENSED
GARY L. HENRY
39310
6/30/11
PROFESSIONAL ENGINEER

DSGN	E FORD				
DR	B NORVILLE				
CHK	G SIMPSON				
APVD	J HENRY	NO.	DATE	REVISION	BY	APVD

VERIFY SCALE
BAR IS ONE INCH ON ORIGINAL DRAWING.
0 1"
IF NOT ONE INCH ON THIS SHEET, ADJUST SCALES ACCORDINGLY.

CH2MHILL
Colorado Springs, CO 80903

SOUTHERN DELIVERY SYSTEM
RAW WATER PIPELINE
SOUTH SECTION ONE

STANDARD DETAILS

STANDARD DETAILS

SHEET	61
DWG	S1-SD-2
DATE	JULY 2011
PROJ	171473.20.SP

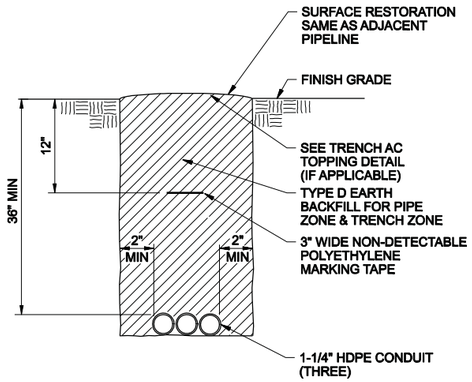

FIBER OPTIC CONDUIT TRENCH

NTS

2605-423B

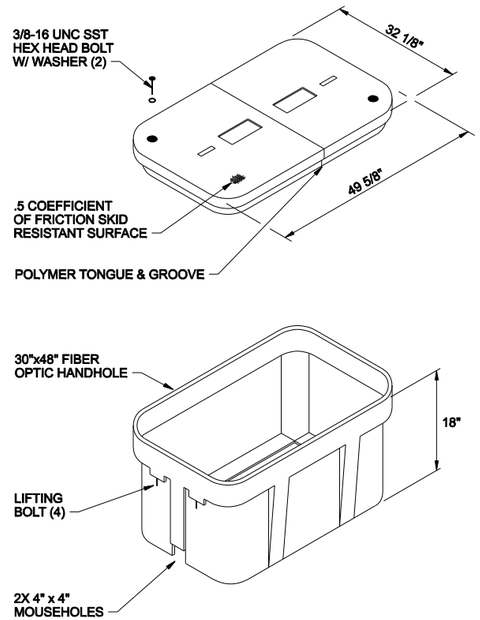

FIBER OPTIC HANDHOLE

NTS

2605-444

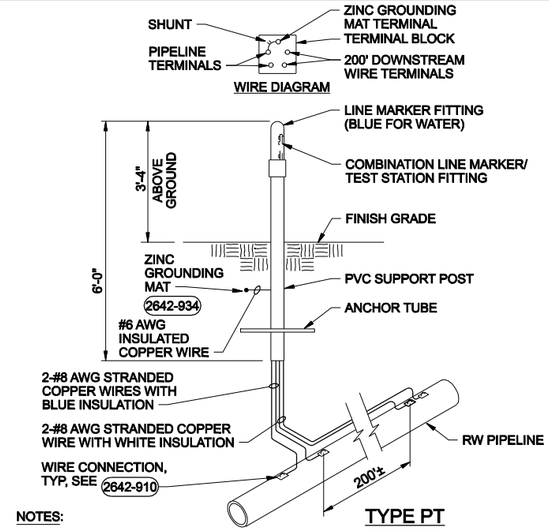

TYPE PT

NOTES:

1. INSTALL TYPE PT TEST STATIONS WHERE INDICATED ON DWGS. ADJUST ACTUAL LOCATION TO NEAREST JOINT.
2. SHOW EXACT LOCATION OF WIRE CONNECTIONS, REFERENCING PIPE PIECE NUMBERS FROM PIPE MANUFACTURER LAYOUT SHEETS AND A MEASURED DISTANCE FROM PIPE END, ON AS-BUILT DRAWINGS.
3. NOT ALL OF GROUNDING MAT IS SHOWN, FOR CLARITY.

POST MOUNTED TEST STATION - TYPE PT

NTS

2642-801A

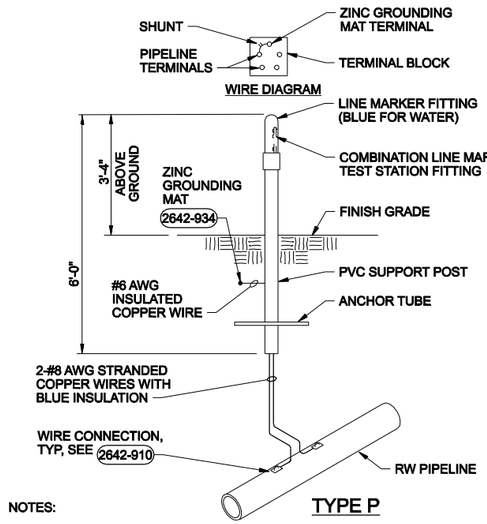

TYPE P

NOTES:

1. INSTALL TYPE P TEST STATIONS WHERE INDICATED ON DWGS. ADJUST ACTUAL LOCATION TO NEAREST JOINT.
2. SHOW EXACT LOCATION OF WIRE CONNECTIONS, REFERENCING PIPE PIECE NUMBERS FROM PIPE MANUFACTURER LAYOUT SHEETS AND A MEASURED DISTANCE FROM PIPE END, ON AS-BUILT DRAWINGS.
3. NOT ALL OF GROUNDING MAT IS SHOWN, FOR CLARITY.

POST MOUNTED TEST STATION - TYPE P

NTS

2642-802A

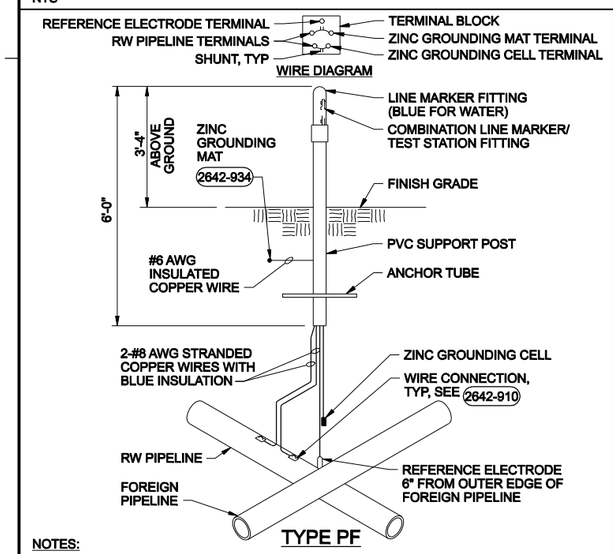

TYPE PF

NOTES:

1. INSTALL TYPE PF TEST STATIONS WHERE INDICATED ON DWGS.
2. OBTAIN APPROVAL OF FOREIGN PIPELINE OWNER PRIOR TO EXCAVATION.
3. SHOW EXACT LOCATION OF WIRE CONNECTIONS, REFERENCING PIPE PIECE NUMBERS FROM PIPE MANUFACTURER LAYOUT SHEETS AND A MEASURED DISTANCE FROM PIPE END, ON AS-BUILT DRAWINGS.
4. NOT ALL OF GROUND MAT IS SHOWN, FOR CLARITY.

POST MOUNTED TEST STATION - TYPE PF

NTS

2642-806A

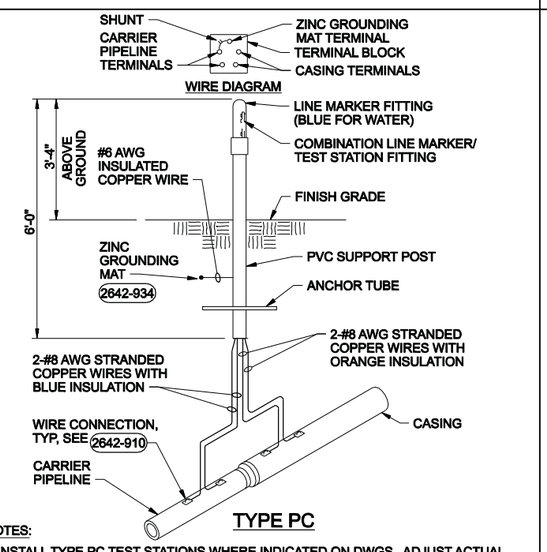

TYPE PC

NOTES:

1. INSTALL TYPE PC TEST STATIONS WHERE INDICATED ON DWGS. ADJUST ACTUAL LOCATION TO NEAREST JOINT.
2. SHOW EXACT LOCATION OF WIRE CONNECTIONS, REFERENCING PIPE PIECE NUMBERS FROM PIPE MANUFACTURER LAYOUT SHEETS AND A MEASURED DISTANCE FROM PIPE END, ON AS-BUILT DRAWINGS.
3. NOT ALL OF GROUND MAT IS SHOWN, FOR CLARITY.

POST MOUNTED TEST STATION - TYPE PC

NTS

2642-811A

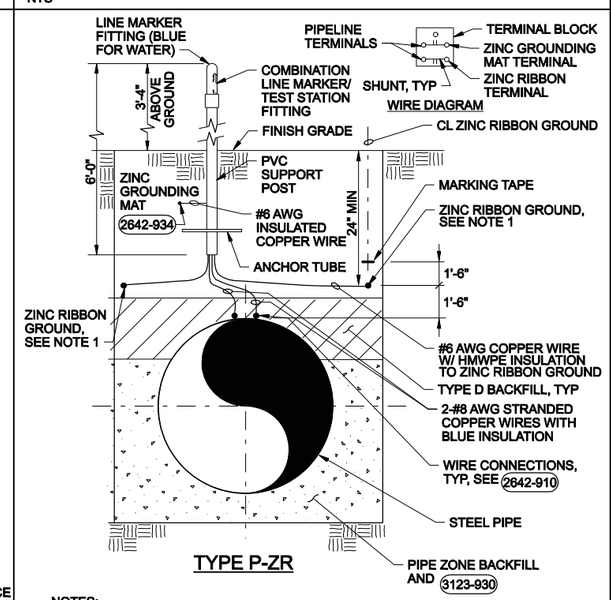

TYPE P-ZR

NOTES:

1. AT POB INSTALL TWO ZINC RIBBON GROUND AT EDGE OF PIPE TRENCH SURROUNDED BY 6" OF NATIVE SOIL.
2. NOT ALL OF GROUNDING MAT IS SHOWN, FOR CLARITY.

POST MOUNTED TEST STATION - TYPE P-ZR

NTS

2642-837

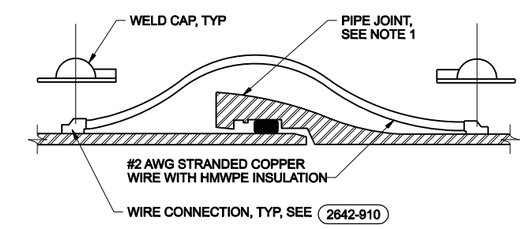

NOTES:

1. PUSH ON TYPE JOINT SHOWN. RESTRAINED JOINT TYPE SHALL HAVE SIMILAR JOINT BONDS.

PUSH-ON JOINT BOND

NTS

2642-840

COLORADO LICENSED PROFESSIONAL ENGINEER — CODY L. HENRY — 39310 — 6/30/11

DSGN	E FORD				
DR	B NORVILLE				
CHK	G SIMPSON				
APVD	J HENRY	NO.	DATE	REVISION	BY	APVD

VERIFY SCALE
BAR IS ONE INCH ON ORIGINAL DRAWING.
0 — 1"
IF NOT ONE INCH ON THIS SHEET, ADJUST SCALES ACCORDINGLY.

CH2MHILL
Colorado Springs, CO 80903

SOUTHERN DELIVERY SYSTEM
RAW WATER PIPELINE
SOUTH SECTION ONE

STANDARD DETAILS

STANDARD DETAILS

SHEET	62
DWG	S1-SD-3
DATE	JULY 2011
PROJ	171473.20.SP

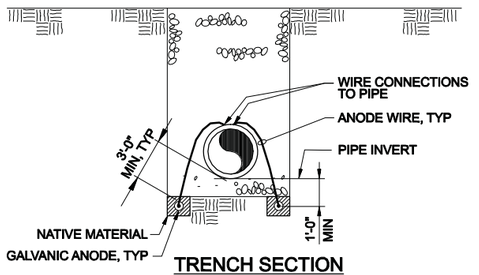

TRENCH SECTION

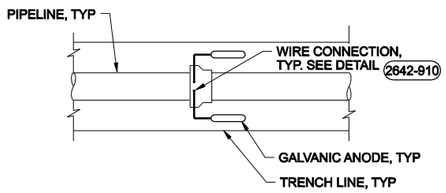

PLAN

NOTES:

1. JOINT BONDS AND COATING NOT SHOWN.

GALVANIC ANODE INSTALLATION (2642-870A)

NTS

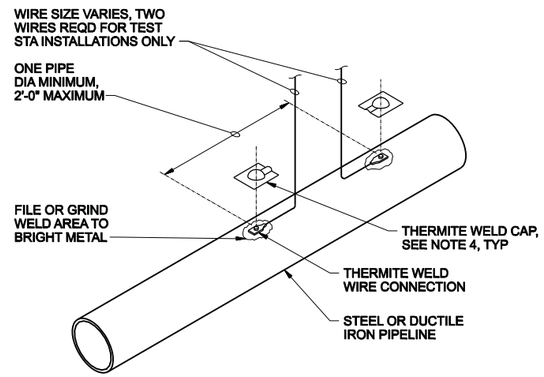

NOTES:

1. COPPER SLEEVE REQUIRED FOR THERMITE WELDING OF #10 AWG AND SMALLER WIRE.
2. USE COPPER SLEEVE ON #2 AWG JOINT BONDING WIRES.
3. WELDER AND CARTRIDGE SIZE VARIES ACCORDING TO WIRE SIZE AND PIPE MATERIAL, CONSULT WELDER MANUFACTURER FOR RECOMMENDED WELDER AND CARTRIDGE.
4. COAT WELD AREA AND FILL RECESS ON THERMITE WELD CAP WITH COLD APPLIED COAL TAR MASTIC AND APPLY CAP TO WELD.

WIRE CONNECTION FOR STEEL AND DUCTILE IRON PIPE (2642-910)

NTS

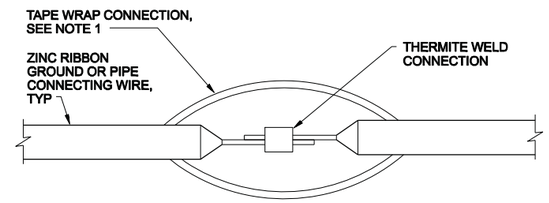

INLINE SPLICE

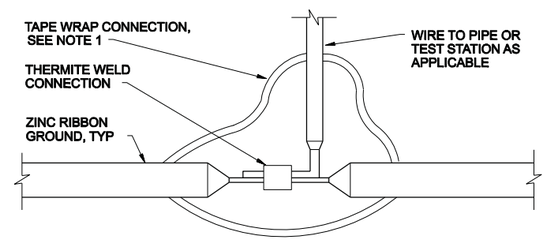

TAP SPLICE

NOTES:

1. WRAP ENTIRE CONNECTION WITH 3 LAYERS HIGH VOLTAGE RUBBER TAPE. THEN WRAP WITH 3 LAYERS VINYL ELECTRICAL TAPE

ZINC RIBBON GROUND AND WIRE SPLICES (2642-911A)

NTS

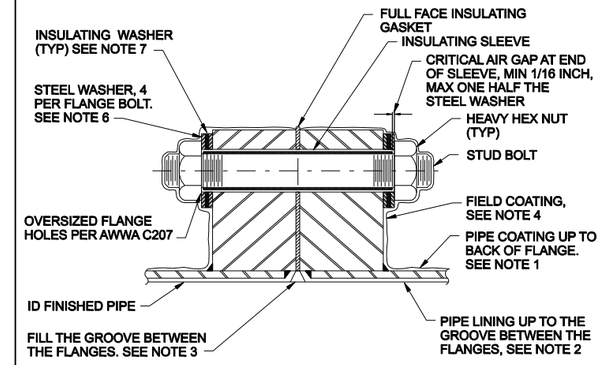

NOTES:

1. THE PIPE COATING ON EACH SIDE OF THE INSULATED FLANGE SHALL BE THE SAME IN TYPE, THICKNESS, AND QUALITY UP TO THE BACK SIDE OF THE RESPECTIVE FLANGE.
2. THE LINING ON THE PIPE SHALL BE THE SAME IN TYPE, THICKNESS, AND QUALITY UP TO THE INSULATED FLANGE JOINT.
3. FOR PIPE LARGER THAN 24 INCH DIAMETER , FILL THE INSULATED FLANGE'S INTERNAL GAP WITH A MATERIAL COMPATIBLE WITH THE PIPE LINING.
4. COAT JOINTS AS SPECIFIED AFTER INSTALLATION.
5. SEE 2642-932 FOR INSULATED BOLTS AT TAPPED VALVE FLANGES.
6. FOR PIPE SMALLER THAN 36 INCH DIAMETER DELETE INNER STEEL WASHERS.
7. FOR BURIED OR SUBMERGED INSULATING FLANGE, DO NOT INSTALL INSULATING WASHER ON PROTECTED SIDE OF FLANGE.

INSULATED FLANGES (2642-930)

NTS

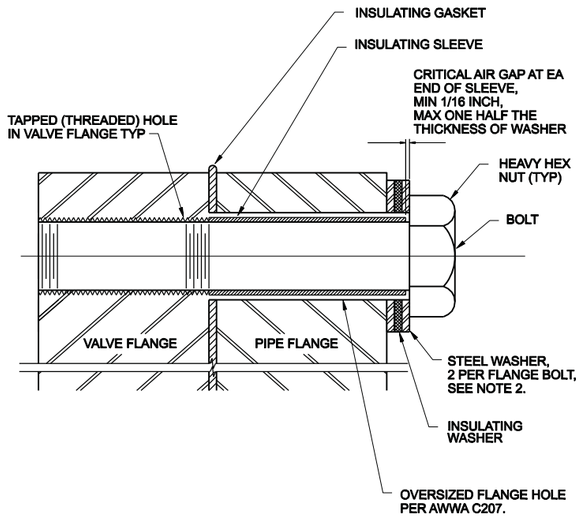

NOTES:

1. COAT COMPLETED JOINT AS SPECIFIED AFTER INSULATION.
2. FOR PIPE SMALLER THAN 36 INCH DIAMETER, DELETE INNER STEEL WASHER.

INSULATED BOLTS AT TAPPED VALVE FLANGES (2642-932)

NTS

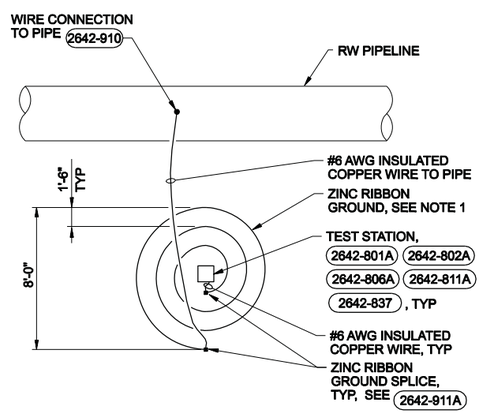

NOTES:

1. INSTALL RIBBON GROUND 12" TO 18" BELOW FINISHED GRADE, COVER WITH 6" MIN THICK, TYPE H DRAIN GRAVEL, EXTEND GRAVEL BACKFILL 18" BEYOND ALL SIDES OF GROUND MAT EXCEPT WHERE SHOWN OTHERWISE.
2. CONNECT 1-#6 AWG WIRE FROM ZINC RIBBON TO WIRE FROM PIPELINE IN TEST STATION USING SHUNT SPECIFIED.
3. CONNECT 1=#6 AWG WIRE FROM ZINC RIBBON DIRECTLY TO PIPELINE.

TEST STATION GROUNDING MAT (2642-934)

NTS

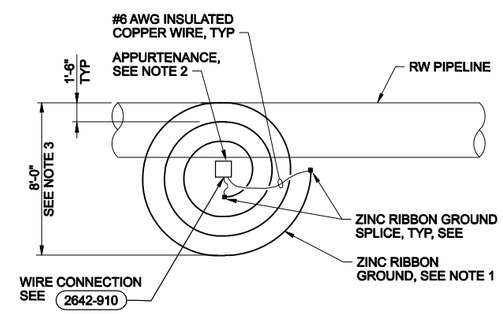

NOTES:

1. INSTALL RIBBON GROUND 12" TO 18" BELOW FINISHED GRADE, COVER WITH 6" MIN THICK, TYPE H DRAIN GRAVEL, EXTEND GRAVEL BACKFILL 18" BEYOND ALL SIDES OF GROUND MAT EXCEPT WHERE SHOWN OTHERWISE.
2. PROVIDE GROUNDING MATS FOR APPURTENANCES INCLUDING BUT NOT LIMITED TO BURIED ACCESS MANWAYS, BLOWOFFS, AIR VAC VAULTS, VALVES, AND VALVE OPERATORS.
3. DIMENSION AS REQUIRED AT VAULTS TO ACHIEVE 3 COMPLETE SPIRALS OF RIBBON GROUND AROUND VAULT AT 1'-6" SEPARATION AS SHOWN.

APPURTENANCE GROUNDING MAT (2642-935)

NTS

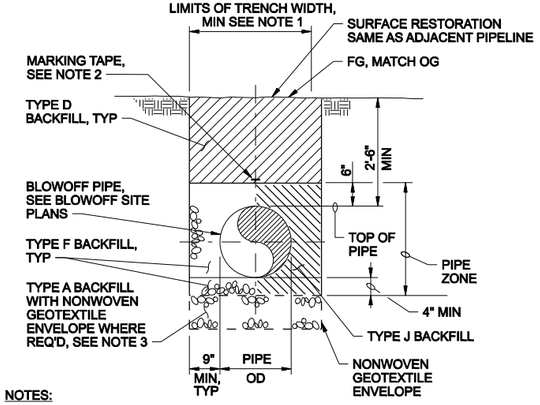

NOTES:

1. SLOPE TRENCH WALLS OR SHORE EXCAVATIONS FOR CONSTRUCTION SAFETY AND IN ACCORDANCE WITH OSHA REQUIREMENTS. FOR ROADWAY CROSSING, CONSTRUCTION PERMIT FROM ROADWAY PERMITTING AUTHORITY WILL GOVERN THE USE OF SLOPED TRENCH SIDEWALLS.
2. INSTALL MARKING TAPE ON TOP OF PIPE ZONE AT TRENCH CENTERLINE AS SHOWN.
3. USE OVER EXCAVATION AND FOUNDATION STABILIZATION MATERIAL WHEN ORDERED BY THE CONSTRUCTION MANAGER WHEN UNSUITABLE, UNEXPECTED TRENCH CONDITIONS ARE FOUND DURING CONSTRUCTION.

TYPICAL BLOWOFF PIPE TRENCH (3123-111)

NTS

COLORADO LICENSED PROFESSIONAL ENGINEER — JODY L. HENRY — 39310 — 6/30/11

DSGN	E FORD					
DR	B NORVILLE					
CHK	G SIMPSON					
APVD	J HENRY	NO.	DATE	REVISION	BY	APVD

VERIFY SCALE: BAR IS ONE INCH ON ORIGINAL DRAWING. 0 — 1". IF NOT ONE INCH ON THIS SHEET, ADJUST SCALES ACCORDINGLY.

CH2MHILL, Colorado Springs, CO 80903

SOUTHERN DELIVERY SYSTEM
RAW WATER PIPELINE
SOUTH SECTION ONE

STANDARD DETAILS

STANDARD DETAILS

SHEET	63
DWG	S1-SD-4
DATE	JULY 2011
PROJ	171473.20.SP

Colorado Springs Utilities Project Number: SDS-002 CSU Work Order Number: 1146977

FILENAME: SP1SDnD04d_171473.dgn PLOT DATE: 6/7/2011 PLOT TIME: 10:21:27 AM

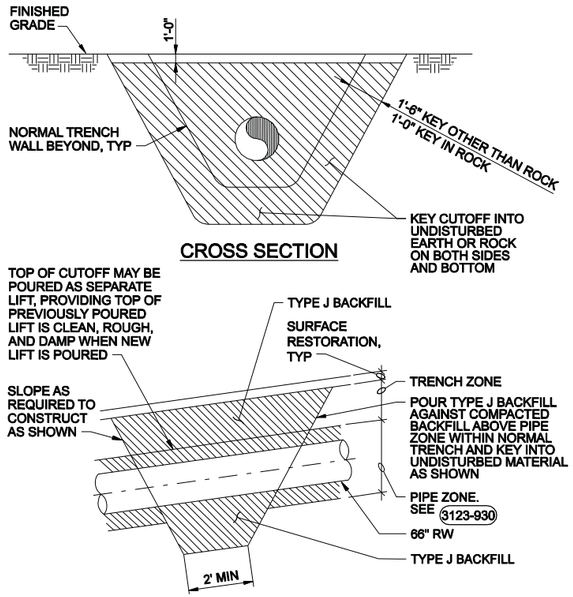

TRENCH PLUG

NTS

3123-900

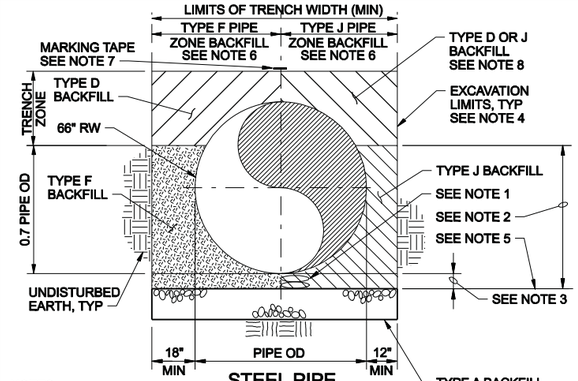

NOTES:

1. SAND BAG SUPPORTS IF TYPE J BACKFILL IS USED. PIPE BEDDING OTHERWISE.
2. PIPE ZONE.
3. PIPE BEDDING SHALL BE 6" MIN FOR TYPE J BACKFILL AND 8" MIN FOR TYPE F.
4. SLOPE TRENCH WALLS OR SHORE EXCAVATIONS FOR CONSTRUCTION SAFETY AND IN ACCORDANCE WITH OSHA REQUIREMENTS. FOR ROADWAY CROSSINGS, CONSTRUCTION PERMIT FROM ROADWAY OWNER WILL GOVERN THE USE OF SLOPED TRENCH SIDEWALLS.
5. DURING CONSTRUCTION, IF THE WATER TABLE IS DISCOVERED TO BE ABOVE THE TRENCH BOTTOM. NOTIFY THE ENGINEER, DEWATER AS SPECIFIED.
6. SEE 3123-930A, 3123-930B, 3123-930C, 3123-930D, & 3123-930E FOR TRENCH ZONE.
7. INSTALL MARKING TAPE ONE FOOT ABOVE TOP OF PIPE.
8. INSTALL TYPE J BACKFILL 12" ABOVE TOP OF PIPE OR 12" BELOW EXST GRADE WHERE INDICATED ON DWGS.

TYPICAL PIPE ZONE

NTS

3123-930

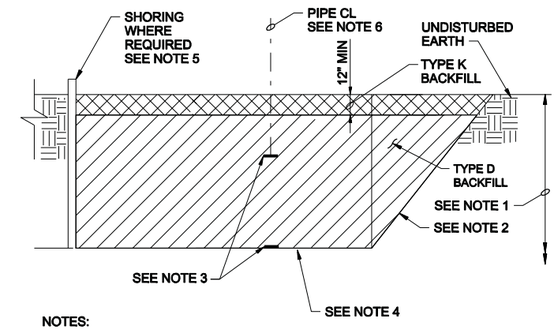

NOTES:

1. TRENCH ZONE.
2. SLOPE TRENCH WALLS OR SHORE EXCAVATIONS FOR CONSTRUCTION SAFETY AND IN ACCORDANCE WITH OSHA REQUIREMENTS.
3. INSTALL MARKING TAPE 2 FEET BELOW GRADE AND ONE FOOT ABOVE TOP OF PIPE AT CENTERLINE, AS INDICATED.
4. SEE 3123-930 .
5. REMOVE SHORING UNLESS OTHERWISE APPROVED BY THE CONSTRUCTION MANAGER.
6. LIMITS OF TRENCH WIDTH 3123-930 .

TRENCH ZONE - OPEN COUNTRY SURFACE RESTORATION

NTS

3123-930A

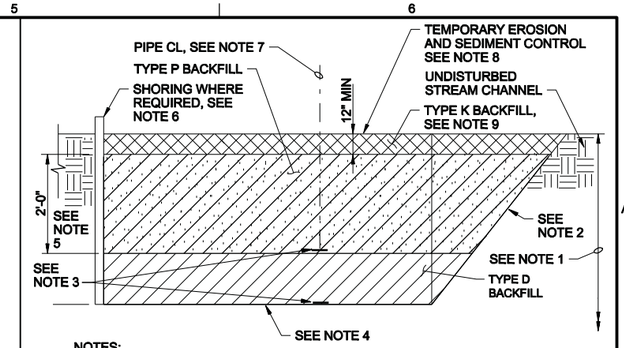

NOTES:

1. TRENCH ZONE.
2. SLOPE TRENCH WALLS OR SHORE EXCAVATIONS FOR CONSTRUCTION SAFETY AND IN ACCORDANCE WITH OSHA REQUIREMENTS.
3. INSTALL MARKING TAPE 2 FEET BELOW GRADE AND ONE FOOT ABOVE TOP OF PIPE AT CENTERLINE, AS INDICATED.
4. SEE 3123-930 .
5. INSTALL TYPE P BACKFILL IN TRENCH ZONE TWO FEET BELOW TYPE K BACKFILL.
6. REMOVE SHORING UNLESS OTHERWISE APPROVED BY THE CONSTRUCTION MANAGER.
7. LIMITS OF TRENCH WIDTH 3123-930.
8. INSTALL TEMPORARY EROSION AND SEDIMENT CONTROLS PER SPECIFICATION 01 57 13 TEMPORARY EROSION AND SEDIMENT CONTROLS.
9. USE NATIVE TOPSOIL FROM PROJECT SITE.

TRENCH ZONE - VEGETATED STREAM CHANNEL RESTORATION

NTS

3123-930B

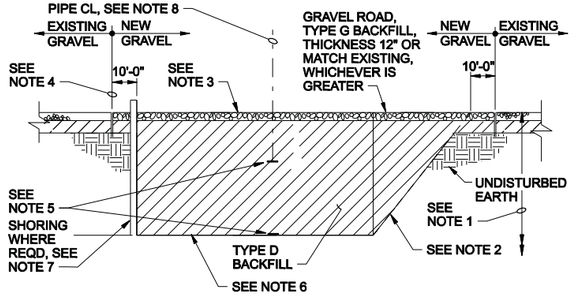

NOTES:

1. TRENCH ZONE.
2. SLOPE TRENCH WALLS OR SHORE EXCAVATIONS FOR CONSTRUCTION SAFETY AND IN ACCORDANCE WITH OSHA REQUIREMENTS. FOR ROADWAY CROSSINGS, CONSTRUCTION PERMIT FROM ROADWAY PERMITTING AUTHORITY WILL GOVERN THE USE OF SLOPED TRENCH SIDEWALLS.
3. REPLACE GRAVEL ROADWAY SECTION, MINIMUM THICKNESS 12".
4. EXTEND NEW GRAVEL 10 FEET OUTSIDE LIMITS OF TRENCH EXCAVATION EACH SIDE.
5. INSTALL MARKING TAPE 2 FEET BELOW GRADE AND ONE FOOT ABOVE TOP OF PIPE AT CENTERLINE, AS INDICATED.
6. SEE 3123-930 .
7. REMOVE SHORING UNLESS OTHERWISE APPROVED BY THE CONSTRUCTION MANAGER.
8. LIMITS OF TRENCH WIDTH 3123-930 .

TRENCH ZONE - GRAVEL SURFACE RESTORATION

NTS

3123-930C

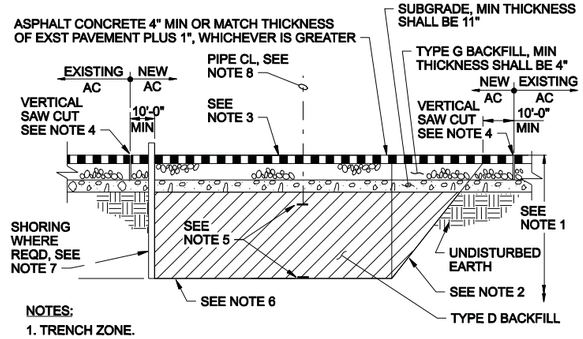

NOTES:

1. TRENCH ZONE.
2. SLOPE TRENCH WALLS OR SHORE EXCAVATIONS FOR CONSTRUCTION SAFETY IN ACCORDANCE WITH OSHA REQUIREMENTS. FOR ROADWAY CROSSINGS, CONSTRUCTION PERMIT FROM ROADWAY PERMITTING TRENCH SIDEWALLS.
3. REPLACE PAVED ROADWAY SECTION AS INDICATED.
4. CONDUCT SAW CUTS OF EXISTING PAVEMENT STRAIGHT, SQUARE AND PARALLEL TO THE TRENCH, A MINIMUM OF 10' OUTSIDE LIMITS OF TRENCH EXCAVATION. PAINT EDGE OF EXISTING ASPHALT WITH TACK COAT PRIOR TO PAVING. CRACK SEAL AFTER PAVING OPERATION.
5. INSTALL MARKING TAPE 4 FEET BELOW GRADE AND ONE FOOT ABOVE TOP OF PIPE AT CENTERLINE, AS INDICATED.
6. SEE 3123-930.
7. REMOVE SHORING UNLESS OTHERWISE DIRECTED BY THE CONSTRUCTION MANAGER.
8. LIMITS OF TRENCH WIDTH 3123-930 . PERMITTING AUTHORITY WILL GOVERN THE USE OF SLOPES AS INDICATED.

TRENCH ZONE - PAVED SURFACE RESTORATION

NTS

3123-930D

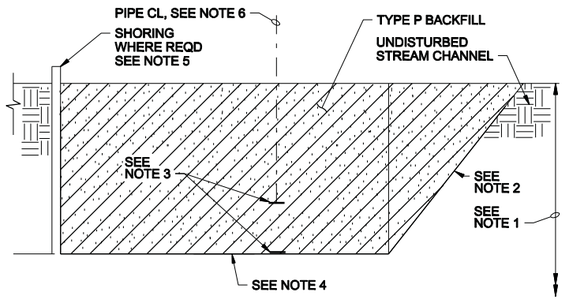

NOTES:

1. TRENCH ZONE.
2. SLOPE TRENCH WALLS OR SHORE EXCAVATIONS FOR CONSTRUCTION SAFETY IN ACCORDANCE WITH OSHA REQUIREMENTS.
3. INSTALL MARKING TAPE 3 FEET BELOW GRADE AND ONE FOOT ABOVE TOP OF PIPE AT CENTERLINE, AS INDICATED.
4. SEE 3123-930.
5. REMOVE SHORING UNLESS OTHERWISE APPROVED BY THE CONSTRUCTION MANAGER.
6. LIMITS OF TRENCH WIDTH 3123-930 .
7. IN SOME CASES CLSM MAY EXTEND INTO TRENCH ZONE.

TRENCH ZONE - NON-VEGETATED STREAM CHANNEL RESTORATION

NTS

3123-930E

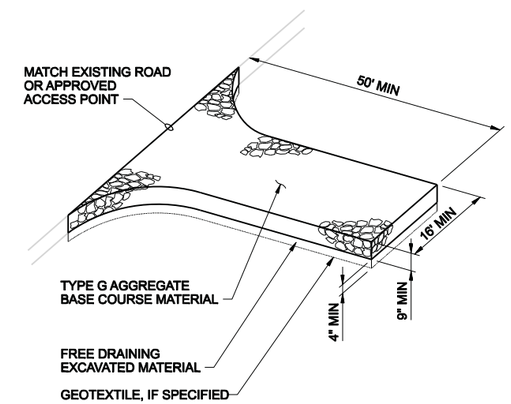

NOTES:

1. ADDITIONAL GRAVEL MAY HAVE TO BE ADDED PERIODICALLY TO MAINTAIN PROPER FUNCTION OF THE PAD.
2. REMOVE GRAVEL ENTRANCE AND REPLACE WITH NEW BASE COURSE PRIOR TO COMPLETION OF ACCESS ROAD
3. LOCATE AS REQUIRED WITHIN WORK LIMITS TO ACCOMODATE CONSTRUCTION.

GRAVEL CONSTRUCTION ENTRANCE

NTS

3125-130

COLORADO LICENSED BODY L. HENRY 39310 6/30/11 PROFESSIONAL ENGINEER

DSGN	E FORD					
DR	B NORVILLE					
CHK	G SIMPSON					
APVD	J HENRY	NO.	DATE	REVISION	BY	APVD

VERIFY SCALE
BAR IS ONE INCH ON ORIGINAL DRAWING.
0 1"
IF NOT ONE INCH ON THIS SHEET, ADJUST SCALES ACCORDINGLY.

CH2MHILL
Colorado Springs, CO 80903

SOUTHERN DELIVERY SYSTEM
RAW WATER PIPELINE
SOUTH SECTION ONE

STANDARD DETAILS

STANDARD DETAILS

SHEET	64
DWG	S1-SD-5
DATE	JULY 2011
PROJ	171473.20.SP

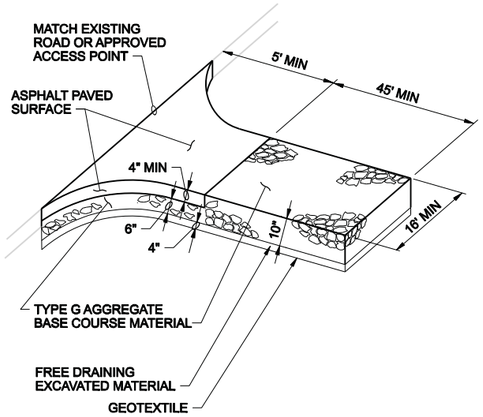

NOTES:

1. ADDITIONAL ASPHALT AND GRAVEL MAY HAVE TO BE ADDED PERIODICALLY TO MAINTAIN PROPER FUNCTION OF THE PAD.
2. REMOVE PAVED ENTRANCE AND REPLACE WITH NEW BASE COURSE PRIOR TO COMPLETION OF ACCESS ROAD.
3. LOCATE AS REQUIRED WITHIN WORK LIMITS TO ACCOMODATE CONSTRUCTION.

PAVED CONSTRUCTION ENTRANCE

NTS

3125-131

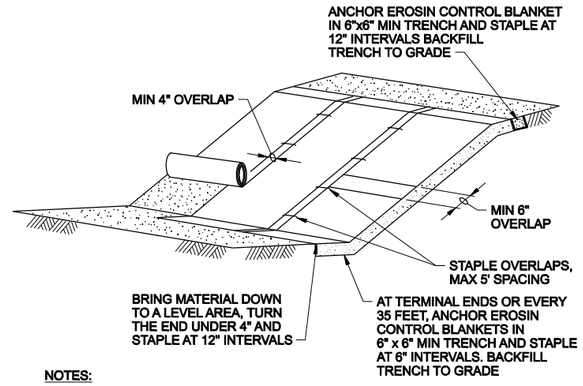

NOTES:

1. DO NOT STRETCH BLANKETS/MATTING TIGHT, ALLOW ROLLS TO MOLD TO ANY IRREGULARITIES.
2. STAPLING PATTERN AS PER MANUFACTURER'S RECOMMENDATIONS.
3. PREP SOIL BEFORE INSTALLATION IN ACCORDANCE WITH SPECIFICATIONS.

EROSION CONTROL BLANKET

NTS

3125-150

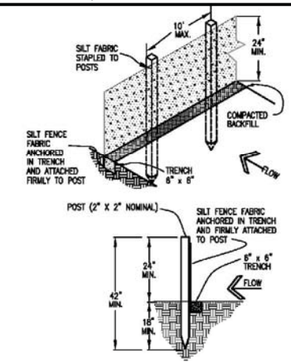

SILT FENCE

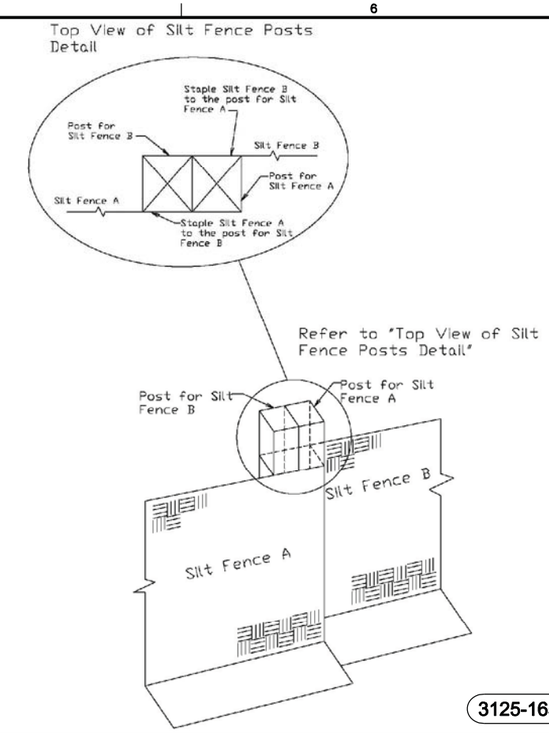

SILT FENCE NOTES

INSTALLATION REQUIREMENTS

1. SILT FENCES SHALL BE INSTALLED PRIOR TO ANY LAND DISTURBING ACTIVITIES.

2. WHEN JOINTS ARE NECESSARY, SILT FENCE GEOTEXTILE SHALL BE SPLICED TOGETHER ONLY AT SUPPORT POST AND SECURELY SEALED.

3. METAL POSTS SHALL BE "STUDDED TEE" OR "U" TYPE WITH MINIMUM WEIGHT OF 1.33 POUNDS PER LINEAR FOOT. WOOD POSTS SHALL HAVE A MINIMUM DIAMETER OR CROSS SECTION DIMENSION OF 2 INCHES.

4. THE FILTER MATERIAL SHALL BE FASTENED SECURELY TO METAL OR WOOD POSTS USING WIRE TIES, OR TO WOOD POSTS WITH 3/4" LONG #9 HEAVY-DUTY STAPLES. THE SILT FENCE GEOTEXTILE SHALL NOT BE STAPLED TO EXISTING TREES.

5. WHILE NOT REQUIRED, WIRE MESH FENCE MAY BE USED TO SUPPORT THE GEOTEXTILE. WIRE FENCE SHALL BE FASTENED SECURELY TO THE UPSLOPE SIDE OF THE POSTS USING HEAVY-DUTY WIRE STAPLES AT LEAST 3/4" LONG, TIE WIRES OR HOG RINGS. THE WIRE SHALL EXTEND INTO THE TRENCH A MINIMUM OF 6" AND SHALL NOT EXTEND MORE THAN 3' ABOVE THE ORIGINAL GROUND SURFACE.

6. ALONG THE TOE OF FILLS, INSTALL THE SILT FENCE ALONG A LEVEL CONTOUR AND PROVIDE AN AREA BEHIND THE FENCE FOR RUNOFF TO POND AND SEDIMENT TO SETTLE. A MINIMUM DISTANCE OF 5 FEET FROM THE TOE OF THE FILL IS RECOMMENDED.

7. THE HEIGHT OF THE SILT FENCE FROM THE GROUND SURFACE SHALL BE MINIMUM OF 24 INCHES AND SHALL NOT EXCEED 36 INCHES; HIGHER FENCES MAY INPOUND VOLUMES OF WATER SUFFICIENT TO CAUSE FAILURE OF THE STRUCTURE.

MAINTENANCE REQUIREMENTS

1. CONTRACTOR SHALL INSPECT SILT FENCES IMMEDIATELY AFTER EACH RAINFALL, AT LEAST DAILY DURING PROLONGED RAINFALL, AND WEEKLY DURING PERIODS OF NO RAINFALL. DAMAGED, COLLAPSED, UNENTRENCHED OR INEFFECTIVE SILT FENCES SHALL BE PROMPTLY REPAIRED OR REPLACED.

2. SEDIMENT SHALL BE REMOVED FROM BEHIND SILT FENCE WHEN IT ACCUMULATES TO HALF THE EXPOSED GEOTEXTILE HEIGHT.

3. SILT FENCES SHALL BE REMOVED WHEN ADEQUATE VEGETATIVE COVER IS ATTAINED AS APPROVED BY THE CITY.

SILT FENCE

NTS

3125-165

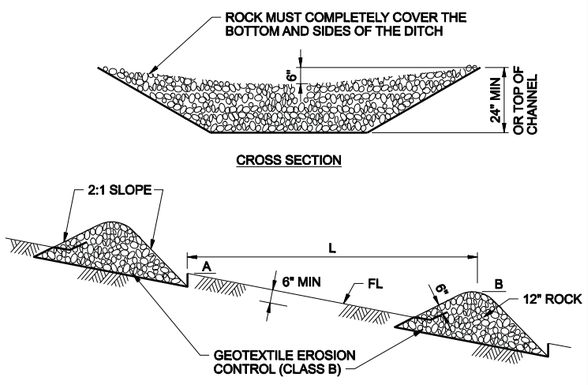

L = THE DISTANCE SUCH THAT POINTS A AND B ARE OF EQUAL ELEVATIONS

DAM SPACING

MAINTENANCE STANDARDS:

1. ANY SEDIMENT DEPOSITION OF MORE THAN 0.5 FEET SHALL BE REMOVED SO THAT THE CHANNEL IS RESTORED TO ITS DESIGN CAPACITY.
2. THE CHANNEL SHALL BE EXAMINED FOR SIGNS OF SCOURING AND EROSION OF THE BED AND BANKS. IF SCOURING OR EROSION HAS OCCURRED, AFFECTED AREAS SHALL BE PROTECTED BY RIP-RAP OR AN EROSION CONTROL BLANKET OR NET.

ROCK CHECK DAMS

NTS

3125-160

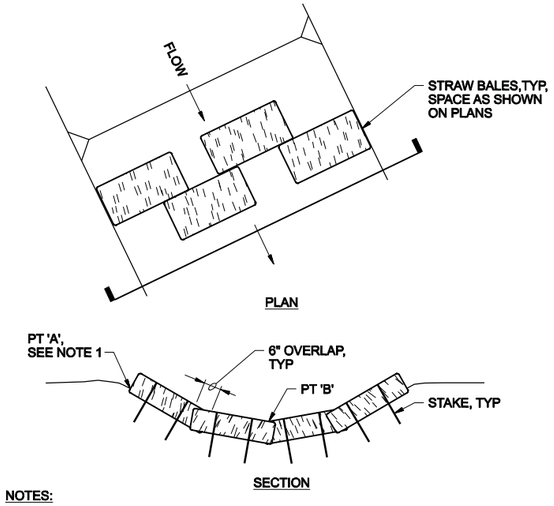

NOTES:

1. POINT 'A' MUST BE 6" MINIMUM HIGHER THAN PT 'B'.
2. STAKING OF BALES IS REQUIRED USING (2)2"x2"x3' LONG WOOD STAKES OR APPROVED EQUAL PER BALE.
3. DRIVE STAKES MINIMUM 12" INTO GROUND AND FLUSH WITH TOP OF BALES.
4. EMBED BALES MINIMUM OF 4" INTO GROUND SURFACE.
5. BIOFILTER BAGS TO BE USED, IF SPECIFIED.

STRAW BALES IN DITCHES

NTS

3125-170

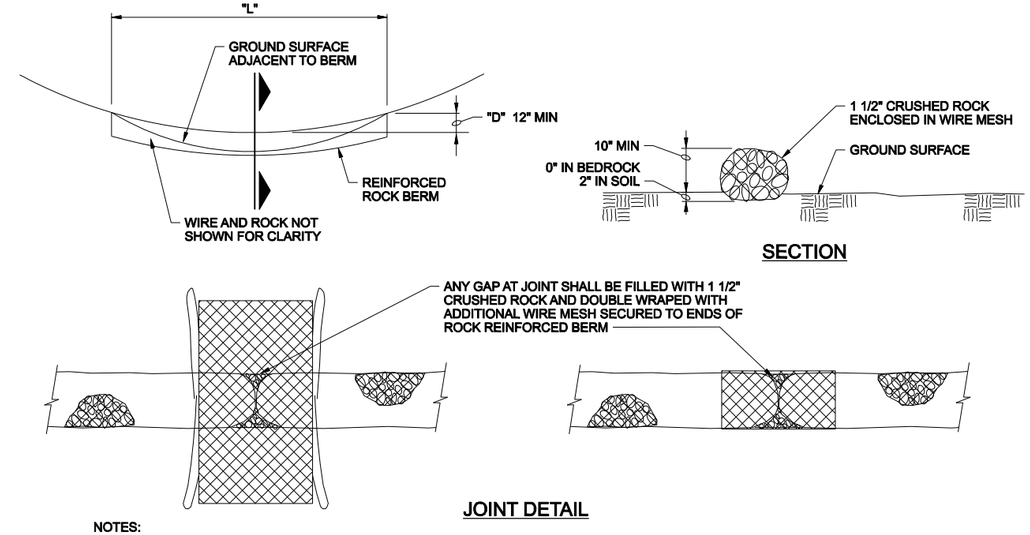

NOTES:

1. CRUSHED ROCK SHALL BE FRACTURED FACE (ALL SIDES). RECYCLED CONCRETE MEETING THE GRADATION MAY BE USED.
2. WIRE MESH SHALL BE FABRICATED OF 10 GAUGE WIRE TWISTED INTO A MESH WITH A MAXIMUM OPENING OF 1.0 INCH (COMMONLY TERMED CHICKEN WIRE). ROLL WIDTH SHALL BE 48 INCHES.
3. WIRE MESH SHALL BE SECURED USING "HOG RINGS" OR WIRE TIES AT 6-INCH CENTERS ALONG ALL JOINTS AND AT 2-INCH CENTERS ON ENDS OF BERM.
4. FOR CONCENTRATED FLOW AREAS, THE ENDS OF THE REINFORCED ROCK BERM SHALL BE 12" HIGHER THAN THE CENTER OF THE BERM.

ROCK SOCKS

NTS

3125-183

COLORADO LICENSED PROFESSIONAL ENGINEER GODY L. HENRY 39310 6/30/11

DSGN	E FORD					
DR	B NORVILLE					
CHK	G SIMPSON					
APVD	J HENRY	NO.	DATE	REVISION	BY	APVD

VERIFY SCALE
BAR IS ONE INCH ON ORIGINAL DRAWING.
0 1"
IF NOT ONE INCH ON THIS SHEET, ADJUST SCALES ACCORDINGLY.

CH2MHILL
Colorado Springs, CO 80903

SOUTHERN DELIVERY SYSTEM
RAW WATER PIPELINE
SOUTH SECTION ONE

STANDARD DETAILS

STANDARD DETAILS

SHEET	65
DWG	S1-SD-6
DATE	JULY 2011
PROJ	171473.20.SP

Colorado Springs Utilities Project Number: SDS-002 CSU Work Order Number: 1146977

FILENAME: SP1SDnD06d_171473.dgn PLOT DATE: 6/7/2011 PLOT TIME: 10:23:03 AM

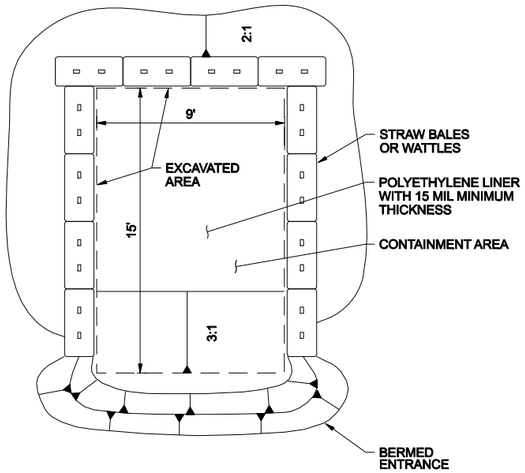

NOTE:
1. PROPERLY CLEAN UP AND DISPOSE OF WASHOUT AT APPROPRIATE LOCATION AFTER CONSTRUCTION.

CONCRETE WASHOUT
NTS

3125-190

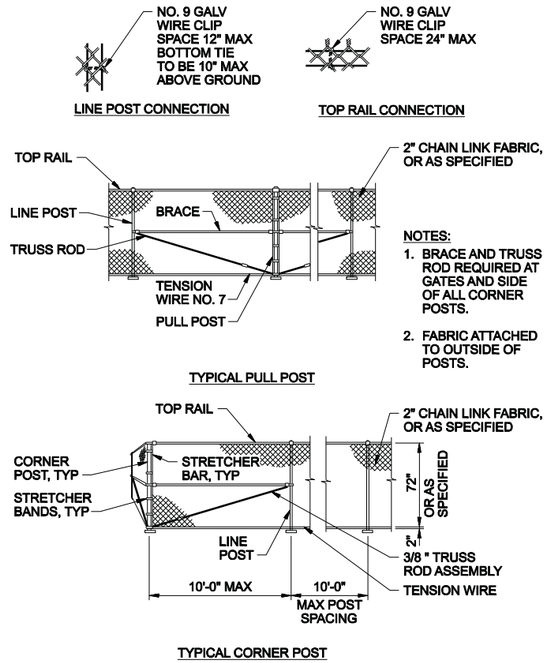

NOTES:
1. BRACE AND TRUSS ROD REQUIRED AT GATES AND SIDE OF ALL CORNER POSTS.
2. FABRIC ATTACHED TO OUTSIDE OF POSTS.

CHAIN LINK FENCE
NTS

3231-410

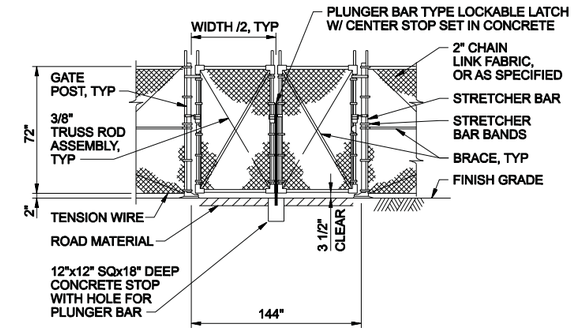

DOUBLE SWING GATE
NTS

3231-415

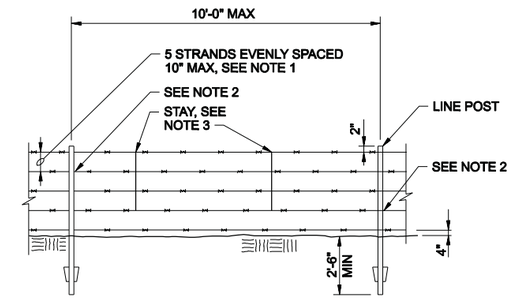

NOTES:
1. SPACING FOR BARBED WIRE FENCE, 5 STRAND SHOWN, ADJUST SPACING ACCORDINGLY FOR 4 STRAND.
2. ATTACH WIRE TO METAL FENCE POSTS WITH CLIPS AS SPECIFIED.
3. 2 STAYS PER PANEL REQUIRED, SPACE EVENLY.

WIRE FENCE
NTS

3231-451

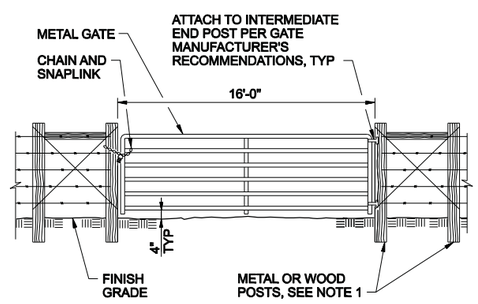

NOTE:
1. IF GALVANIZED TUBULAR STEEL IS USED FOR GATE END POST ASSEMBLY, FILL WITH CONCRETE. PROVIDE 1" HIGH GROUT CAP.

METAL GATE
NTS

3231-452

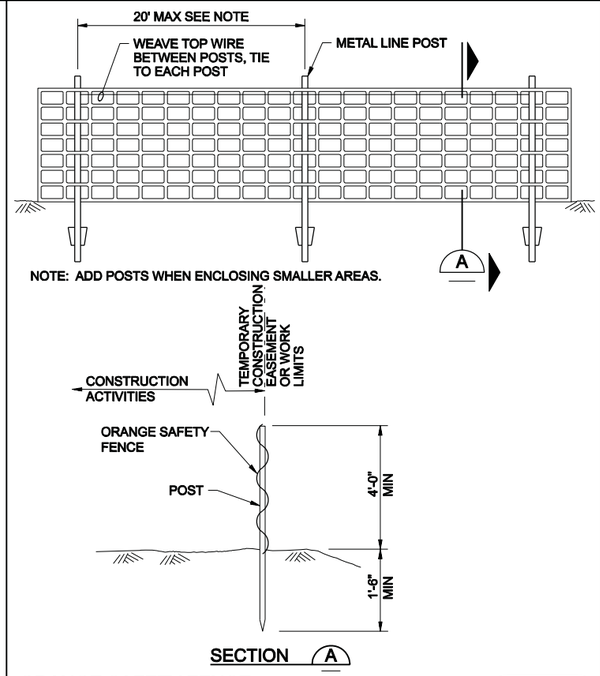

ORANGE SAFETY FENCE
NTS

3231-666

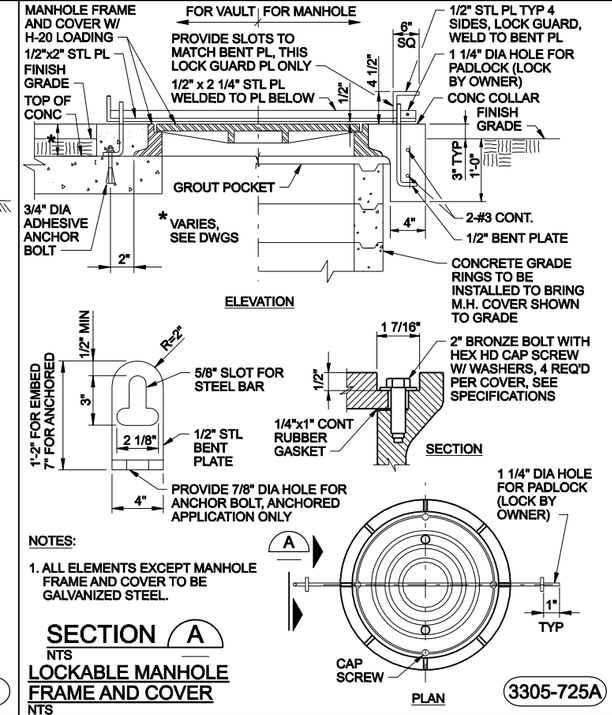

NOTES:
1. ALL ELEMENTS EXCEPT MANHOLE FRAME AND COVER TO BE GALVANIZED STEEL.

SECTION A
NTS

LOCKABLE MANHOLE FRAME AND COVER
NTS

3305-725A

COLORADO LICENSED PROFESSIONAL ENGINEER
JOHN L. HENRY
39310
6/30/11

DSGN	E FORD				
DR	B NORVILLE				
CHK	G SIMPSON				
APVD	J HENRY	NO.	DATE	REVISION	BY	APVD

VERIFY SCALE
BAR IS ONE INCH ON ORIGINAL DRAWING.
0 1"
IF NOT ONE INCH ON THIS SHEET, ADJUST SCALES ACCORDINGLY.

CH2MHILL
Colorado Springs, CO 80903

SOUTHERN DELIVERY SYSTEM
RAW WATER PIPELINE
SOUTH SECTION ONE

STANDARD DETAILS

STANDARD DETAILS

SHEET	66
DWG	S1-SD-7
DATE	JULY 2011
PROJ	171473.20.SP

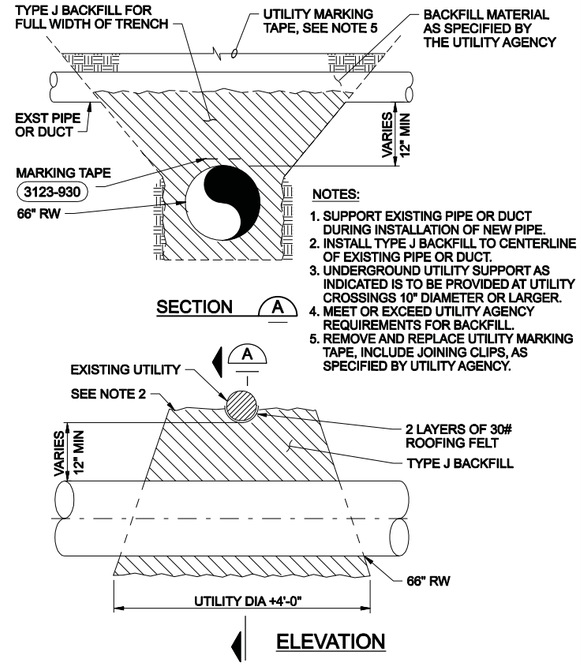

NOTES:

1. SUPPORT EXISTING PIPE OR DUCT DURING INSTALLATION OF NEW PIPE.
2. INSTALL TYPE J BACKFILL TO CENTERLINE OF EXISTING PIPE OR DUCT.
3. UNDERGROUND UTILITY SUPPORT AS INDICATED IS TO BE PROVIDED AT UTILITY CROSSINGS 10" DIAMETER OR LARGER.
4. MEET OR EXCEED UTILITY AGENCY REQUIREMENTS FOR BACKFILL.
5. REMOVE AND REPLACE UTILITY MARKING TAPE, INCLUDE JOINING CLIPS, AS SPECIFIED BY UTILITY AGENCY.

MAJOR UTILITY CROSSING

NTS

3305-762

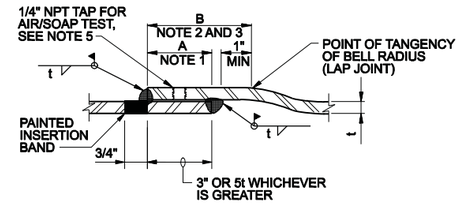

NOTES:

1. DIMENSION "A" CORRESPONDS TO THE COMPLETED JOINT OVERLAP AFTER WELDING. DIMENSION "A" IS THE GREATER OF 3 INCHES OR 5t, MINIMUM FOR STANDARD JOINTS. INCREASE DIMENSION "A" FOR SPECIAL TEMPERATURE CONTROL JOINTS AS FURTHER DISCUSSED IN NOTE 3.
2. PROVIDE THE MINIMUM OVERLAP DIMENSION "A" AND MAINTAIN THE INDICATED HOLDBACK FOR THE WELD AS REQUIRED FOR THE MINIMUM DIMENSION "B" FOR STANDARD JOINTS.
3. INCREASE DIMENSION "B" BY 3 INCHES FOR SPECIAL TEMPERATURE CONTROL JOINTS. AT THE TIME OF INSTALLATION AND PRIOR TO WELDING, INSERT THE SPIGOT INTO THE LENGTHENED BELL TO PROVIDE "A" +3 INCHES MINIMUM OVERLAP. SEE SPECIFICATIONS FOR SPECIAL TEMPERATURE CONTROL JOINT WELDING REQUIREMENTS.
4. CONFIGURATION FOR BELL AND SPIGOT LAP JOINTS SHOWN. CONFIGURATION ON BUTT STRAP JOINTS ARE SIMILAR.
5. INSTALL TAP ON BELL. PERFORM AIR/SOAP TEST AND OTHER WELD TESTS AS REQUIRED IN ACCORDANCE WITH SPECIFICATIONS. PLUG TAP WITH WELDED PLUG AFTER COMPLETION OF SUCCESSFUL AIR/SOAP TEST.
6. FABRICATE AND INSTALL JOINTS WITHIN THE TOLERANCES INDICATED. TOLERANCE REQUIREMENTS APPLY TO BOTH WELDS AND TO BOTH STRAIGHT AND DEFLECTED JOINTS.

DOUBLE LAP JOINT WELD

NTS

3305-903

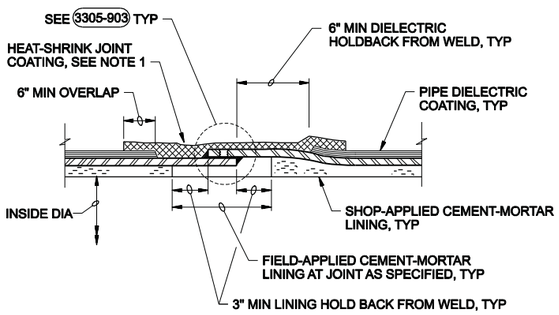

NOTES:

1. ELECTRICAL COATING TEST AFTER HEAT-SHRINK JOINT COATING INSTALLATION PER SPECIFICATION 09 81 12, PIPE JOINT COATING - WELD BEFORE BACKFILL.

DOUBLE LAP WELDED SLIP JOINT

NTS

3305-904

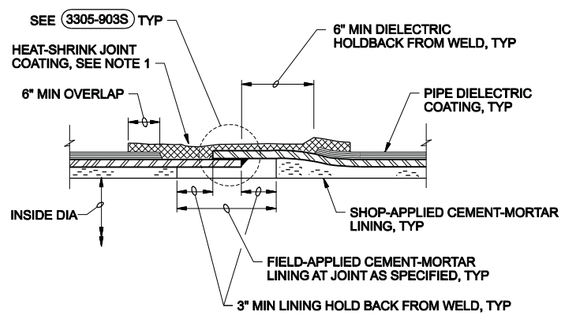

NOTES:

1. APPLY PER SPECIFICATION SECTION 09 81 10, PIPE JOINT COATING - WELD AFTER BACKFILL, AND WELD AFTER BACKFILL PLAN.

SINGLE LAP WELDED SLIP JOINT

NTS

3305-904A

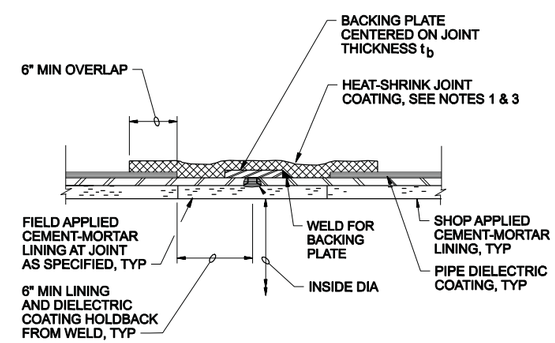

NOTES:

1. ELECTRICAL COATING TEST AFTER HEAT-SHRINK JOINT COATING INSTALLATION PER SPECIFICATION 09 81 12 PIPE JOINT COATING WELD BEFORE BACKFILL.
2. WELDING AFTER BACKFILL IS NOT ALLOWED.
3. HEAT-SHRINK JOINT COATING NOT REQUIRED ON VERTICAL JOINT OF 90 DEGREE ELBOW INSIDE THE RISER SHAFT.

BUTT WELD

NTS

3305-906

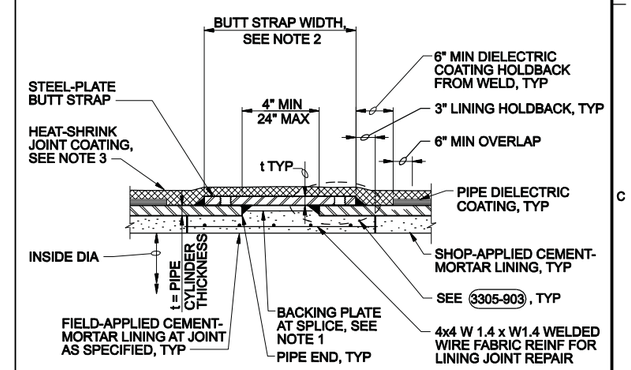

NOTES:

1. FOR FIELD WELDING OF INDIVIDUAL BUTT STRAP PIECES TO EACH OTHER, SEE 3305-910.
2. UNLESS OTHERWISE NOTED, CONFORM BUTT STRAP WIDTH TO THE LIMITATIONS SHOWN FOR PIPE END SEPARATION AND STEEL OVERLAP REQUIREMENTS. THIS INCLUDES THE ADDITIONAL 3-INCH INCREASE IF A TEMPERATURE CONTROL JOINT IS REQUIRED AT A BUTT STRAP JOINT.
3. ELECTRICAL COATING TEST AFTER HEAT-SHRINK JOINT COATING INSTALLATION PER SPECIFICATION 09 81 12, PIPE JOINT COATING - WELD BEFORE BACKFILL.

BUTT STRAP JOINT

NTS

3305-908

COLORADO LICENSED GLORY L. HENRY 39310 6/30/11 PROFESSIONAL ENGINEER

DSGN	E FORD				
DR	B NORVILLE				
CHK	G SIMPSON				
APVD	J HENRY	NO.	DATE	REVISION	BY	APVD

VERIFY SCALE
BAR IS ONE INCH ON ORIGINAL DRAWING.
0 1"
IF NOT ONE INCH ON THIS SHEET, ADJUST SCALES ACCORDINGLY.

CH2MHILL
Colorado Springs, CO 80903

SOUTHERN DELIVERY SYSTEM
RAW WATER PIPELINE
SOUTH SECTION ONE

STANDARD DETAILS

STANDARD DETAILS

SHEET	67
DWG	S1-SD-8
DATE	JULY 2011
PROJ	171473.20.SP

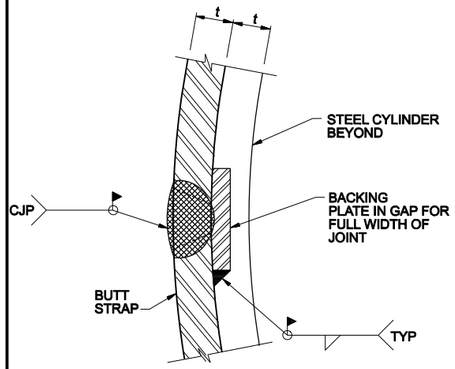

NOTES:

1. LININGS AND COATINGS ARE NOT SHOWN FOR CLARITY.
2. BEVEL ENDS OF BACKING PLATE AT BUTT STRAP PRIOR TO WELDING OR BACK GOUGE AT CONTACT WITH ADJACENT CYLINDER PRIOR TO COMPLETING INSIDE FILLET WELD.

BUTT STRAP SPLICE

NTS

3305-910

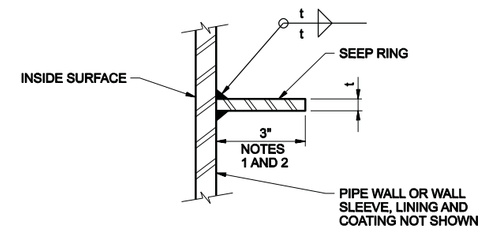

SEEP RING THICKNESS	
PIPE SIZE	THICKNESS-t
30" & UNDER	1/4"
31" TO 60"	5/16"
61" & OVER	3/8"

NOTES:

1. PROVIDE 2" CLEAR BETWEEN REINFORCING BARS AND SEEP RING.
2. PROVIDE 3" SEEP RING LENGTH UNLESS OTHERWISE SHOWN.
3. LINE AND COAT AS SPECIFIED.

SEEP RING

NTS

3305-916

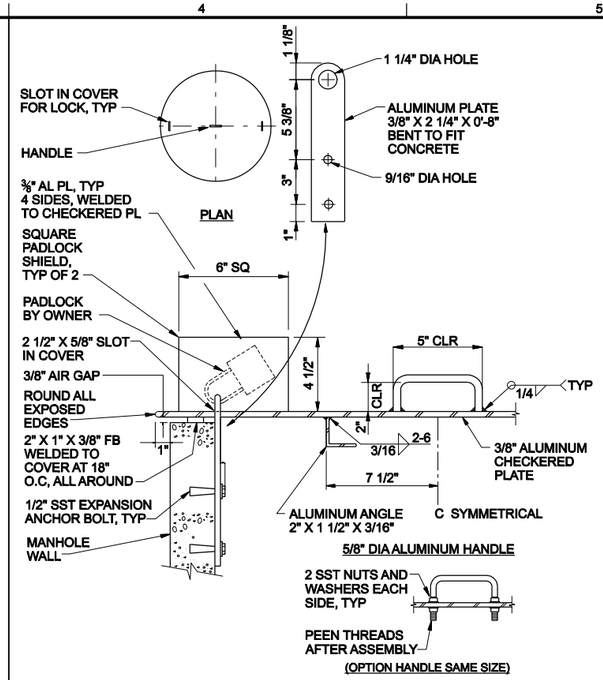

ABOVE GRADE MANHOLE COVER

NTS

3305-926

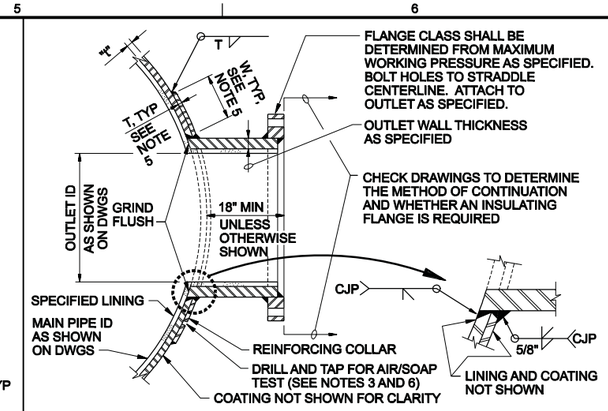

NOTES:

1. COAT AND LINE ALL EXPOSED SURFACES AS SPECIFIED.
2. "t" INDICATES THE THICKNESS OF THE WSP AT THE STATION WHERE USED.
3. TEST WELDS AND COLLARED OUTLETS IN ACCORDANCE WITH SPECIFICATIONS.
4. MATERIAL FOR CONSTRUCTION OF REINFORCING COLLARS SHALL BE THE SAME AS THE ADJOINING PIPING (MAIN PIPE).
5. DESIGN REINFORCING COLLARS WHERE CENTERLINES OF MAIN PIPE AND COLLARED OUTLET INTERSECT AND ARE ORTHOGONAL. DESIGN IN ACCORDANCE WITH THE LATEST AWWA M-11.
6. PLUG TAP WITH WELDED PLUG AFTER COMPLETION OF AIR/SOAP TEST.

3-INCH AND LARGER REINFORCED OPENINGS - COLLARED OUTLETS

NTS

3305-937

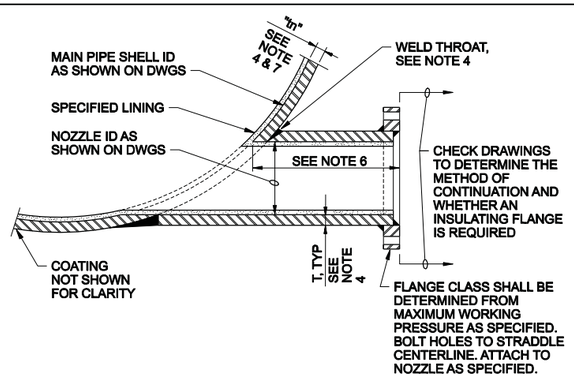

NOTES:

1. COAT AND LINE EXPOSED SURFACES AS SPECIFIED.
2. TEST NOZZLES AND WELDS IN ACCORDANCE WITH SPECIFICATIONS.
3. MATERIAL FOR CONSTRUCTION OF MAIN PIPE SHELL AND NOZZLE IN ACCORDANCE WITH SPECIFICATIONS.
4. DESIGN NOZZLES (T), MAIN PIPE SHELL (tn) AND WELD THROAT IN ACCORDANCE WITH ASME BOILER AND PRESSURE VESSEL CODE SECTION VIII, DIVISION I, RULES FOR CONSTRUCTION OF PRESSURE VESSELS.
5. MATCH INVERTS OF MAIN PIPE SHELL AND NOZZLE OR WITH MINIMAL OFFSET.
6. EXTEND NOZZLE 18" MIN BEYOND MAIN PIPE SHELL UNLESS OTHERWISE SHOWN ON DWGS.
7. SHOP TAPER ASME MAIN PIPE SHELL (tn) AT 4:1 AND BUTT JOINT WELD PER 3305-906 TO AN AWWA MAIN PIPE BELL AND SPIGOT OF CORRESPONDING FIELD LOCATION WALL THICKNESS.

3-INCH AND LARGER REINFORCED OPENINGS - NOZZLES

NTS

3305-937A

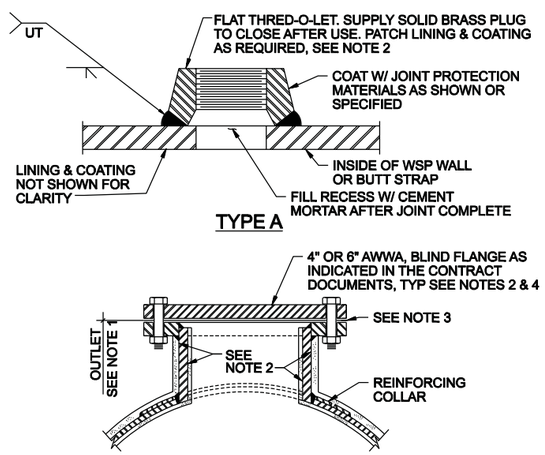

NOTES:

1. FABRICATE OUTLET PER 3305-937 .
2. LINE AND COAT AS SPECIFIED.
3. GASKET AS INDICATED IN THE CONTRACT DOCUMENTS.
4. FLANGE CLASS SHALL BE DETERMINED FROM MAXIMUM WORKING PRESSURE AS SPECIFIED

NOTE:

CONTRACTOR MAY USE TYPE A OUTLET FOR UP TO 3" DIA OUTLETS. 4" AND 6" DIA OUTLETS SHALL BE TYPE B.

BURIED WELD LEAD OUTLET

NTS

3305-939

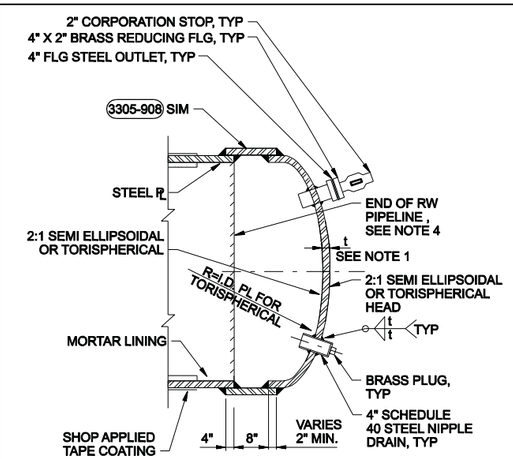

NOTES:

1. WALL THICKNESS (t) EQUALS THICKNESS OF THE ADJOINING PIPE.
2. LINE AND COAT TEST BULKHEAD AND PLAIN END WITH 9 MILS MINIMUM RUST INHIBITING PRIMER.
3. MINIMUM 8" HOLDBACK REQUIRED AFTER TEST HEAD IS CUT OFF.
4. SEE DRAWINGS FOR STATION AND LOCATION OF PIPELINE ENDS.

TEST BULKHEAD

NTS

3305-945A

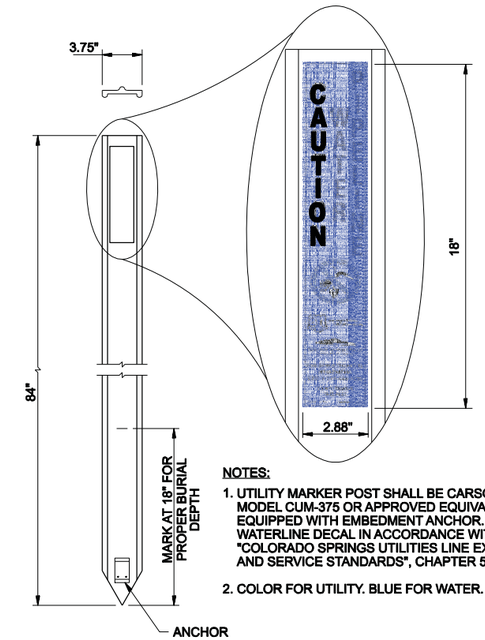

NOTES:

1. UTILITY MARKER POST SHALL BE CARSONITE MODEL CUM-375 OR APPROVED EQUIVALENT EQUIPPED WITH EMBEDMENT ANCHOR. WATERLINE DECAL IN ACCORDANCE WITH "COLORADO SPRINGS UTILITIES LINE EXTENSION AND SERVICE STANDARDS", CHAPTER 5.32.
2. COLOR FOR UTILITY. BLUE FOR WATER.

PIPE MARKER POST

NTS

3305-960

COLORADO LICENSED PROFESSIONAL ENGINEER CODY L. HENRY 39310 6/30/11

DSGN	E FORD
DR	B NORVILLE
CHK	G SIMPSON
APVD	J HENRY

NO.	DATE	REVISION	BY	APVD

VERIFY SCALE
BAR IS ONE INCH ON ORIGINAL DRAWING.
0 1"
IF NOT ONE INCH ON THIS SHEET, ADJUST SCALES ACCORDINGLY.

CH2MHILL
Colorado Springs, CO 80903

SOUTHERN DELIVERY SYSTEM
RAW WATER PIPELINE
SOUTH SECTION ONE

STANDARD DETAILS

STANDARD DETAILS

SHEET	68
DWG	S1-SD-9
DATE	JULY 2011
PROJ	171473.20.SP

Colorado Springs Utilities Project Number: SDS-002 CSU Work Order Number: 1146977

FILENAME: SP1SDnD09d_171473.dgn PLOT DATE: 6/7/2011 PLOT TIME: 11:02:23 AM

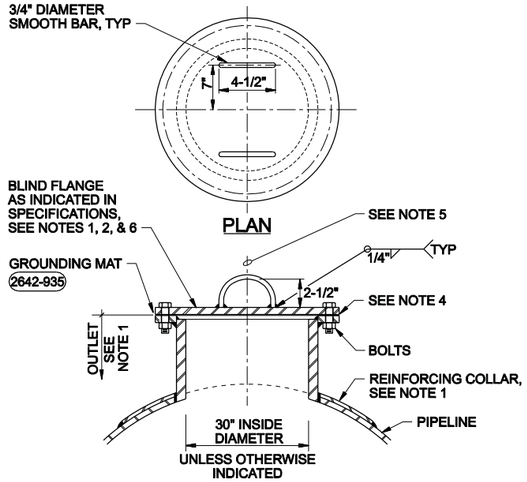

NOTES:

1. FABRICATE OUTLET PER 3305-937 EXCEPT AS MODIFIED HEREIN.
2. LINE AND COAT AS SPECIFIED.
3. AFTER COMPLETION OF BACKFILLING PROVIDE A PERMANENT MARKER DIRECTLY ABOVE MANWAY AS INDICATED ON 3123-930
4. GASKET AS INDICATED IN THE SPECIFICATIONS.
5. TOP CENTER OF PIPELINE EXCEPT WHERE SHOWN DIFFERENT.
6. FLANGE CLASS SHALL BE DETERMINED FROM MAXIMUM WORKING PRESSURE AS SPECIFIED.

BURIED ACCESS MANWAY

NTS

3305-962

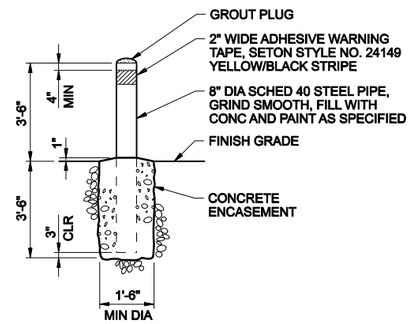

GUARDPOST - EXTERIOR

NTS

3471-810

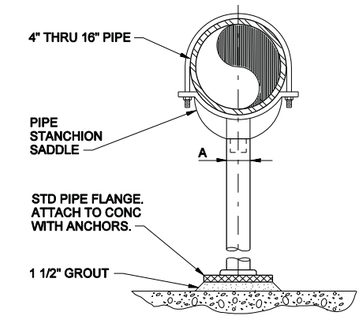

DIMENSION TABLE	
PIPE SIZE	A
4"	3"
5"	3"
6"	3"
8"	3"
10"	3"
12"	3"
16"	4"

NOTES:

1. FOR BASE, HEIGHT, AND FLANGE DIMENSIONS, SEE TABLE
2. PROVIDE NEOPRENE WAFFLE ISOLATION PAD WITH 2-INCH EXTENSION BEYOND SADDLE ON EACH SIDE.

PIPE SUPPORT

NTS

4005-501A

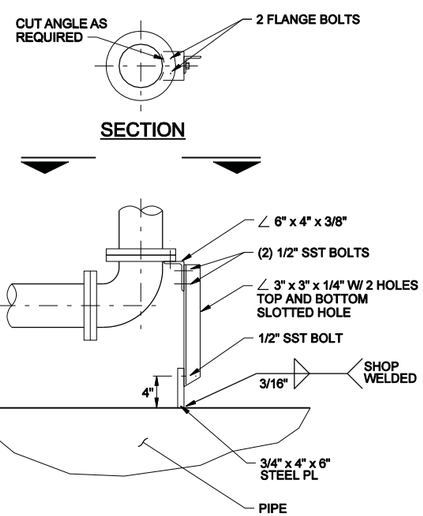

AIR/VAC VALVE SUPPORT

NTS

4005-501B

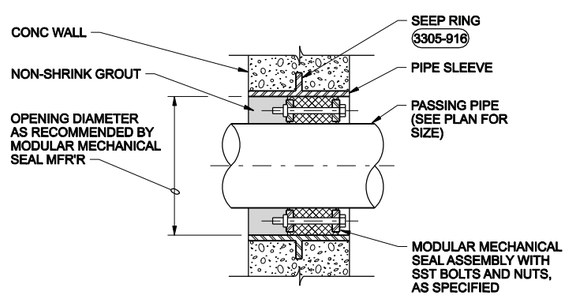

NOTES:

1. PIPE SLEEVE NOT REQUIRED FOR CORE DRILL OPENINGS OR PRECAST CONCRETE WALLS.

WALL PIPE PENETRATION SEAL

NTS

4027-607

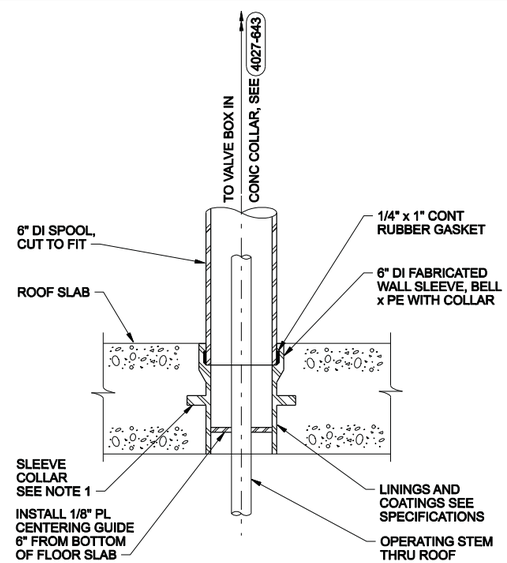

NOTE:

1. REINFORCING BARS IN CONCRETE SHALL MAINTAIN 2" CLEAR DISTANCE FROM COLLAR.

DUCTILE IRON ROOF SLAB SLEEVE

NTS

4026-623

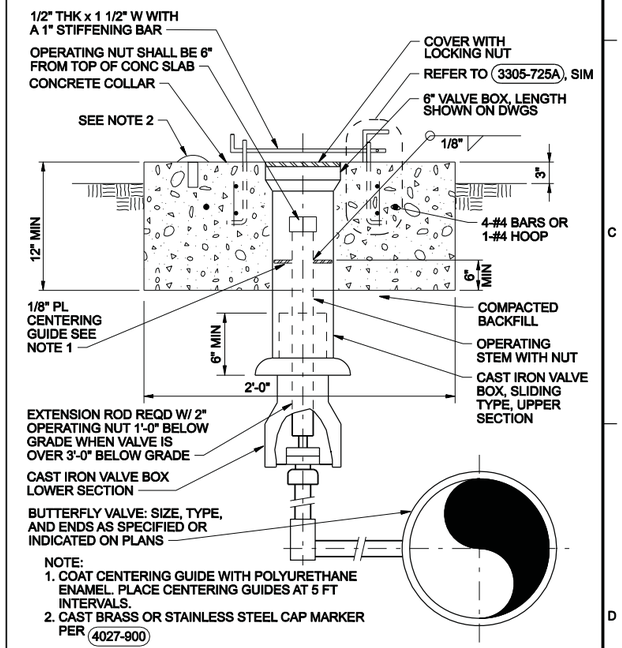

NOTE:

1. COAT CENTERING GUIDE WITH POLYURETHANE ENAMEL. PLACE CENTERING GUIDES AT 5 FT INTERVALS.
2. CAST BRASS OR STAINLESS STEEL CAP MARKER PER 4027-900

VALVE BOX IN CONCRETE COLLAR

NTS

4027-643

COLORADO LICENSED PROFESSIONAL ENGINEER
CODY L. HENRY
39310
6/30/11

DSGN	E FORD					
DR	B NORVILLE					
CHK	G SIMPSON					
APVD	J HENRY	NO.	DATE	REVISION	BY	APVD

VERIFY SCALE
BAR IS ONE INCH ON ORIGINAL DRAWING.
0 1"
IF NOT ONE INCH ON THIS SHEET, ADJUST SCALES ACCORDINGLY.

CH2MHILL
Colorado Springs, CO 80903

SOUTHERN DELIVERY SYSTEM
RAW WATER PIPELINE
SOUTH SECTION ONE

STANDARD DETAILS

STANDARD DETAILS

SHEET	69
DWG	S1-SD-10
DATE	JULY 2011
PROJ	171473.20.SP

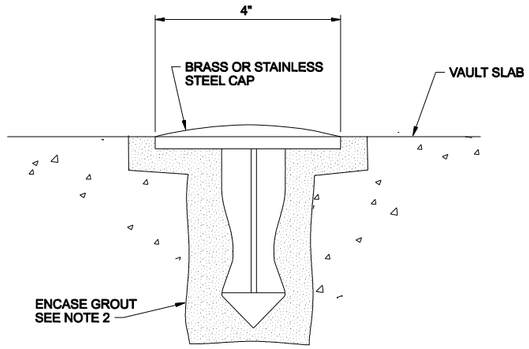

NOTES:
1. CAST TAG INTO SLAB.
2. FOR EXISTING SLAB, DRILL 1" DIAMETER HOLE 4" DEEP. CLEAN HOLE, INSERT TAG, MARK OUTLINE OF TAG. ENLARGE HOLE TO PROVIDE COUNTER SUNK DEPTH OF CAP. USE NON-SHRINK GROUT TO FILL HOLE, INSERT TAG. CLEAN AREA.
3. SEE SPECIFICATIONS FOR CAP MARKINGS.

MARKER TAG

NTS

4027-900

COLORADO LICENSED
JODY L. HENRY
39310
6/30/11
PROFESSIONAL ENGINEER

DSGN	E FORD				
DR	B NORVILLE				
CHK	G SIMPSON				
APVD	J HENRY	NO.	DATE	REVISION	BY	APVD

VERIFY SCALE
BAR IS ONE INCH ON ORIGINAL DRAWING.
0 1"
IF NOT ONE INCH ON THIS SHEET, ADJUST SCALES ACCORDINGLY.

CH2MHILL
Colorado Springs, CO 80903

SOUTHERN DELIVERY SYSTEM
RAW WATER PIPELINE
SOUTH SECTION ONE

STANDARD DETAILS

STANDARD DETAILS

SHEET	70
DWG	S1-SD-11
DATE	JULY 2011
PROJ	171473.20.SP

Colorado Springs Utilities Project Number: SDS-002 CSU Work Order Number: 1146977

FILENAME: SP1SDnD11d_171473.dgn PLOT DATE: 6/7/2011 PLOT TIME: 11:04:09 AM

DRAFT

Staging Area Plan

SOUTHERN DELIVERY SYSTEM

Raw Water Pipeline
South Section One (S1)

Colorado Springs Utilities

Location of Construction Site:

Pueblo Reservoir Dam to Pueblo West
Pueblo County, CO
Section 8, 17, 19, 20, 30, T 20S, R65W
Section 25, T 20S, R 66W

Key Contact:
Keith Riley
Planning & Permitting Program Manager
Colorado Springs Utilities
(719) 668-8677

Written by:
Colorado Springs Utilities

August 2011

Table of Contents

Foreword

The Southern Delivery System (SDS) Program has developed this Staging Area Plan to provide descriptions of the staging area locations, construction work times, material delivery hours, noise suppression guidelines, dust abatement activities, construction methods, and other mitigation of construction nuisances associated with the construction of the Raw Water Pipeline Work Package South Section 1 (S1) project area. This Plan has been developed in accordance with the requirements of the Pueblo County 1041 Permit No. 2008-02 as approved by the Pueblo County Board of County Commissioners Resolution No. P&D 09-22, recorded April 21, 2009. Colorado Springs Utilities and Contractor personnel will be familiar with this plan and its contents prior to initiating construction on the project.

Project Description

Site Description

The S1 project area extends in a north-northeasterly direction through Lake Pueblo State Park and Pueblo Motorsports Park motocross recreation area in Pueblo County from approximately 140 feet south of Juniper Road near the Pueblo Reservoir Dam to approximately 50 feet north of the intersection of East Spaulding Avenue and South Ashford Drive in Pueblo West, Colorado. The majority of the construction area is located within federal, state and local government-owned lands, with privately-owned properties located in the northern portion of the alignment. The construction area includes a tunneled crossing beneath a Union Pacific Railroad (UPRR) right-of-way, crossing of a Colorado State Parks water line, two crossings of the Fountain Valley Authority (FVA) water pipeline, and two roadway crossings. The entire project area is primarily composed of sparsely vegetated areas of grasses and weeds with ground surface elevations ranging between 4,800 feet above mean sea level (AMSL) at the south end of the alignment, 5,070 feet AMSL at the high point in the central portion, and 4,940 feet AMSL at the north end.

Description of the Construction Activity

Colorado Springs Utilities has received approval to construct the SDS Project. SDS is a regional water delivery system that upon completion will serve the City of Colorado Springs, City of Fountain, Security Water District, and Pueblo West Metropolitan District (the SDS Participants). The completed project will transport water from the Pueblo Reservoir through a 62-mile underground pipeline to the SDS Participants, with delivery of treated water scheduled to begin in 2016. Colorado Springs Utilities serves as the SDS Project Manager on behalf of the SDS Participants and oversees the SDS construction and project management activities. The SDS Project is designed to provide the SDS Participants with most or all future water needs through 2046.

The S1 project area consists of the installation of approximately 4.3 miles of 66-inch diameter welded steel pipeline and three 1.25-inch diameter HDPE fiber optic conduits, and includes an approximately 308-foot trenchless crossing beneath a Union Pacific Railroad (UPRR) track installed within a 10-foot diameter steel liner plate. Construction of S1 is scheduled to commence in late-2011. One garage structure near the north end of the construction area is

scheduled to be removed prior to pipeline construction activities. Demolition of the existing structure will take place within the project area boundaries.

Phasing and Sequencing of Major Activities

The work limits will be cleared and grubbed of obstructions and vegetation such as brush, logs, and stumps to prepare a level working surface. Examples of pipeline construction equipment that may be used during pipeline construction generally includes trucks, loaders, graders, excavators, backhoes, trenchers, side-booms, welding and testing supplies, and pickups. Trench spoil will be temporarily excavated and stockpiled to one-side of the trench.

Topsoil will be salvaged before trenching and stockpiled within the work limits. Salvaging of topsoil will be used to assist in the final revegetation and stabilization process at the completion of the pipeline construction activities.

The standard open cut construction method will primarily be used to install the pipeline segments. This work consists of clearing, trenching, pipe installation, welding, weld testing, interior joint lining, exterior joint coating, backfilling, compacting, hydrostatic testing for leakage, cleanup, and restoration. As noted above, a trenchless crossing will be constructed beneath US Highway 50, which will allow the pipeline to be installed without impacting the surface of the roadway.

Trenching activities will be performed in accordance with the construction documents and standard engineering practices. The trench will be excavated to sufficient depth to provide adequate cover over the pipeline to a width between 8.5 and 10 feet wide and sloped as required for safety. The spoil bank from the trenching operations will be maintained free of foreign materials.

Imported granular material and controlled low strength material (CLSM, or flowfill) will be used for pipe bedding and pipe zone backfill depending upon local soil conditions in the trench. Native material from excavations will be used as trench backfill above the pipe zone. Compaction will meet the requirements defined in the specifications. Backfilling of the trench and boring pits will be performed using appropriate methods to minimize impacts to the right-of-way and to minimize soil disturbance.

Grading may be performed if necessary to level the ground surface to permit transit and operation of vehicles and equipment, but surface grades will be generally restored to pre-project contours at the end of construction. Permanent erosion control measures will be installed immediately after substantial completion of pipeline installation. These facilities will be monitored and maintained by the Contractor for a period of 2 years after construction or until 90% of pre-existing vegetation has been re-established. After this period the permanent erosion control measures will be maintained by Colorado Springs Utilities prior to and after the commissioning of the pipeline.

Estimates of the Project Work Limits

The entire area to be impacted for this portion of the project is approximately 92 acres. This includes any potential construction or staging areas outside of the work area for S1. The defined work limits for the project area are outlined and included in the project specifications and drawings provided under separate cover. Temporary material staging will be conducted within the work limits of the pipeline construction and in designated staging areas adjacent to the construction area.

An off-site construction office and storage facility will be used for office purposes by the SDS project management team and the pipeline contractor as well as for short-term material storage purposes. The off-site office and storage facility is not included as part of this plan.

Defined Staging Areas

The following seven areas have been defined for use as designated staging areas along the S1 project area for temporary equipment staging and material storage:

- **Staging Area S1-1** – Southern portion of alignment; north of UPRR crossing area
- **Staging Area S1-2** – Central portion of alignment; south of unnamed drainage creek
- **Staging Area S1-3** – Northern portion of alignment; west of E Spaulding Avenue and S Birchwood Drive intersection
- **Staging Area S1-4** – South end of alignment; east of pipeline and north of Juniper Road on US Department of Interior, Bureau of Reclamation (Reclamation) owned land
- **Staging Area S1-5** – South end of alignment; west of pipeline and north of Juniper Road on Reclamation owned land
- **Staging Area S1-6** – Southern portion of alignment; west of pipeline and south of UPRR crossing area on Reclamation owned land
- **Staging Area S1-7** – Southern portion of alignment; west of pipeline and south of UPRR crossing area (northwest of S1-6) on Reclamation owned land

The areas of the above staging locations are outlined on the drawings provided in Exhibit A.

Construction Work Times

Construction work within the project area will be performed between the hours of 7:00 a.m. to 6:00 p.m., Monday through Friday. Work outside of these hours will be restricted to maintenance of traffic, safety, and construction controls, maintenance of construction equipment, and approved exceptions. Pueblo County and residences within 500 feet of the affected portion of the work area must be notified 48 hours in advance of work outside of these hours, other than for maintenance or emergency work. When work is necessary to be conducted outside of these hours, the Contractor will request approval from the construction manager for such work at least four days in advance of the proposed work.

Material Delivery Hours

Material delivery within the project area will be conducted consistent with the time constraints and conditions outlined for the construction work times discussed above.

Noise Suppression

A Noise Control Plan has been developed under separate cover to mitigate construction noise at the site in accordance with applicable OSHA, State of Colorado and local noise control standards, requirements, regulations and ordinances. The Noise Control Plan includes information related to use of noise monitoring equipment and applicable acoustical treatments. Requirements of the Noise Control Plan will be implemented and managed by the site's safety representative(s).
In an effort to suppress noise levels in the project area, the following will be implemented:

- Acoustical barriers will be provided to prevent noise emanating from tools or equipment from exceeding legal noise levels as defined by local noise control ordinances.
- Access to the construction areas will be restricted.
- Baseline noise conditions will be measured prior to commencing construction work, with the baseline consisting of the average noise reading over three 24-hour periods at each receptor lot-line location or at 1-mile intervals, whichever is greater.
- Generated sound levels will be periodically monitored and decibel levels recorded. If noise levels exceed appropriate standards, construction operations will cease and additional noise mitigation measures will be implemented as required to comply with appropriate standards.
- Excessively high decibel level work, characterized as a decibel scale of 100 or greater measured at 25 feet from the source, will be performed only between the hours of 9:00 a.m. and 5:00 p.m., Monday through Friday.
- Operations will be conducted such that trucks and other vehicles do not interfere with traffic or create a mud, dust, or noise nuisance in the streets and to adjacent properties.

Dust Abatement

A Fugitive Dust Control Plan has been developed under separate cover providing guidelines to control fugitive dust emissions resulting from work activities and/or wind using best available control technologies, as defined by the Colorado Department of Public Health and Environment (CDHPE). Requirements of the Fugitive Dust Control Plan will be implemented and managed by both the Contractor and Colorado Springs Utilities.

In an effort to manage dust levels in the project area, the following will be implemented:

- Applicable environmental regulations will be adhered to for dust prevention. Other control methods may also be used as necessary upon approved by the Construction Manager.
- A CDPHE Air Pollution Emission Notice (APEN) and General Construction Permit for land development projects will be obtained for the project area.
- Operations will be conducted such that trucks and other vehicles do not interfere with traffic or create a mud, dust, or noise nuisance in the streets and to adjacent properties.
- All unpaved roads and other disturbed surface areas within the project area will be watered as necessary or provided a dust-preventive treatment to prevent off-site transport of visible fugitive particulate emissions.
- Vehicle speeds on all unpaved roads and disturbed areas will not exceed a maximum of 30 miles per hour (mph).
- Earthwork activities will be limited and/or cease when wind speeds exceed 30 mph. During grading, applying a combination of water, tackifier and silt fence to break up wind surface velocities may be used to control dust. If wind speeds exceed the ability of control measures to control fugitive dust, work activities must cease.
- Excavated material will be covered with synthetic or natural cover as needed and sediment movement from work areas will be controlled using silt fence.
- Operations of dumping rock or soil and of carrying rock or soil away in trucks will be conducted to cause a minimum of dust. Loads of rock or soil will also be covered to cause a minimum of dust.
- Gravel entryways and other suitable vehicle tracking control will be utilized to prevent mud and dirt carryout onto roadway surfaces. Any mud and dirt carryout onto roadway surfaces will be cleaned up daily.
- Roadways, streets, and walkways affected by the work and adjacent to the work will be swept when necessary to remove construction-related dirt and dust.
- All disturbed surface areas within the project area will be revegetated during the first normal period of favorable seeding and planting conditions after final preparation for seeding and planting. Unless otherwise directed by the Construction Manager, acceptable periods of permanent seeding and planting will be conducted between November 1 through April 30 if non-irrigated, or between March 15 through July 15 if irrigated.
- The following particulate monitoring activities will be performed by Colorado Springs Utilities:
    - Particulate monitors will be used in real time and capable of monitoring particulate matter less than 10 microns (PM10).
    - Particulate levels will be monitored immediately downwind at the working site and integrated over a period not to exceed 15 minutes.
    - Monitoring will be conducted a minimum of once per day, with additional testing conducted if complaints are received.

- An action level of 150 micrograms per cubic meter ($\mu g/cm^3$) over the integrated period not to exceed 15 minutes will be followed.
  - If particulate levels are detected in excess of 150 $\mu g/cm^3$, the upwind background level will be measured immediately using the same portable meter.
  - If the working site particulate measurement is greater than 100 $\mu g/cm^3$ above the background level, additional dust suppression techniques will be implemented to reduce the generation of fugitive dust.

Inspections, Maintenance, and Recordkeeping

Inspections, maintenance and recordkeeping related to staging areas will be conducted in accordance with applicable monitoring and management plans including, but not limited to, the Stormwater Management Plan (SWMP), Fugitive Dust Control Plan, Noise Control Plan, and Hazardous Materials Management Plan. Copies of these plans are available for review under separate covers. Inspections will include the disturbed project areas and areas used for storage of materials.

EXHIBIT A

Site Map and Staging Area Location Drawings
(attached)

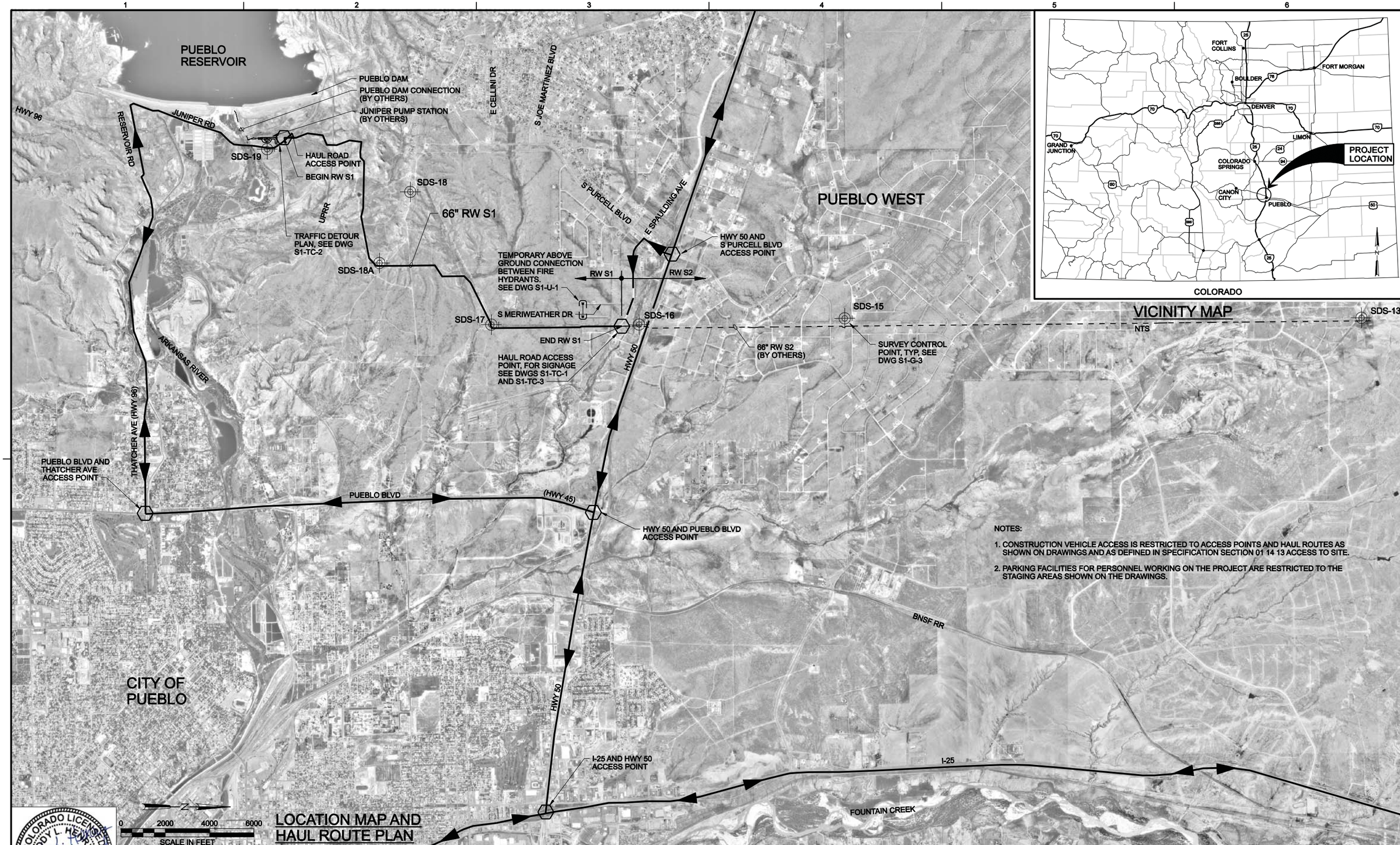

NOTES:

1. CONSTRUCTION VEHICLE ACCESS IS RESTRICTED TO ACCESS POINTS AND HAUL ROUTES AS SHOWN ON DRAWINGS AND AS DEFINED IN SPECIFICATION SECTION 01 14 13 ACCESS TO SITE.
2. PARKING FACILITIES FOR PERSONNEL WORKING ON THE PROJECT ARE RESTRICTED TO THE STAGING AREAS SHOWN ON THE DRAWINGS.

COLORADO LICENSED PROFESSIONAL ENGINEER
JODY L. HENRY
39310
10/30/11

DSGN	E FORD
DR	B NORVILLE
CHK	W CHRISTOFFERSON
APVD	J HENRY

NO.	DATE	REVISION	BY	APVD

VERIFY SCALE
BAR IS ONE INCH ON ORIGINAL DRAWING.
0 1"
IF NOT ONE INCH ON THIS SHEET, ADJUST SCALES ACCORDINGLY.

CH2MHILL
Colorado Springs, CO 80903

SOUTHERN DELIVERY SYSTEM
RAW WATER PIPELINE
SOUTH SECTION ONE

GENERAL

LOCATION MAP, VICINITY MAP, AND HAUL ROUTE PLAN

SHEET	5
DWG	S1-G-5
DATE	JULY 2011
PROJ	171473.20.SP

Colorado Springs Utilities Project Number: SDS-002 CSU Work Order Number: 1146977

FILENAME: SP101nG05d_171473.dgn PLOT DATE: 6/29/2011 PLOT TIME: 7:23:24 AM

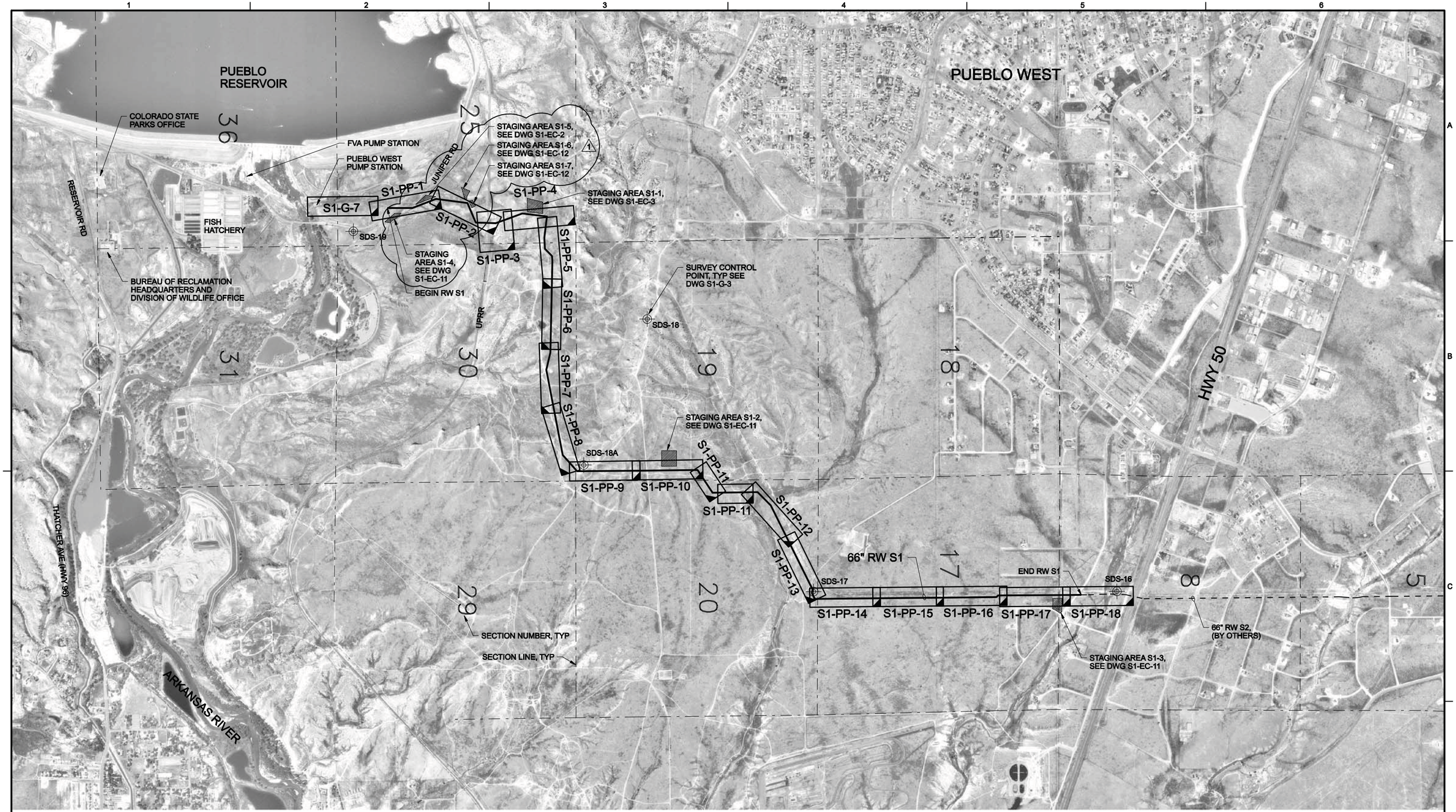

COLORADO LICENSED
JODY L. HENRY
39310
PROFESSIONAL ENGINEER

DSGN J HENRY					
DR B NORVILLE					
CHK J HENRY	1	7/13/11	ADDENDUM NO. 1	BN	JH
APVD J HENRY	NO.	DATE	REVISION	BY	APVD

VERIFY SCALE
BAR IS ONE INCH ON ORIGINAL DRAWING.
0 1"
IF NOT ONE INCH ON THIS SHEET, ADJUST SCALES ACCORDINGLY.

CH2MHILL
Colorado Springs, CO 80903

SOUTHERN DELIVERY SYSTEM
RAW WATER PIPELINE
SOUTH SECTION ONE

GENERAL

KEY PLAN AND STAGING AREAS

SHEET	6
DWG	S1-G-6
DATE	JULY 2011
PROJ	171473.20.SP

Colorado Springs Utilities Project Number: SDS-002 CSU Work Order Number: 1146977

FILENAME: SP101nG06d_171473.dgn PLOT DATE: 7/7/2011 PLOT TIME: 11:52:20 AM

ABBREVIATIONS

AB	ANCHOR BOLT, AGGREGATE BASE
ABC	AGGREGATE BASE COURSE
ABND	ABANDONED
AC	ASBESTOS CEMENT, ASPHALTIC CONCRETE
ACP	ASBESTOS CEMENT PIPE
ADJ	ADJACENT, ADJUSTABLE
ADPTR	ADAPTER
AGGR	AGGREGATE
AH	AHEAD
AISC	AMERICAN INSTITUTE OF STEEL CONSTRUCTION
ALIGN	ALIGNMENT
AL	ALUMINUM
AMT	AMOUNT
ANSI	AMERICAN NATIONAL STANDARDS INSTITUTE
APPROX	APPROXIMATELY
ASCE	AMERICAN SOCIETY OF CIVIL ENGINEERS
ASME	AMERICAN SOCIETY OF MECHANICAL ENGINEERS
ASPH	ASPHALT
ASSY	ASSEMBLY
ASTM	AMERICAN SOCIETY FOR TESTING AND MATERIALS
ASWG	AMERICAN STEEL WIRE GAGE
@	AT
AUTH	AUTHORIZE
AUTO	AUTOMATIC
AVRV	AIR VACCUM RELEASE VALVE
AVE	AVENUE
AVG	AVERAGE
AWG	AMERICAN WIRE GAUGE
AWS	AMERICAN WATER WORKS ASSOCIATION
AWWA	AMERICAN WELDING SOCIETY
BC	BEGIN CURVE
BCR	BEGIN CURVE RETURN
BETW	BETWEEN
BF	BLIND FLANGE
BFV	BUTTERFLY VALVE
BITUM	BITUMINOUS
BK	BACK
BLDG	BUILDING
BLVD, BD	BOULEVARD
BM	BENCH MARK, BEAM
BMPS	BEST MANAGEMENT PRACTICES
BO	BLOWOFF
BOT	BOTTOM
BRG	BEARING
BV	BALL VALVE
BW	BOTH WAYS
C ESMT	CONSTRUCTION EASEMENT
C&G	CURB AND GUTTER
CATH	CATHODIC
CARV	COMBINATION AIR RELEASE AND VACUUM VALVE
CB	CATCH BASIN
CCP	CONCRETE CYLINDER PIPE
CDF	CONTROL DENSITY FILL
CDOT	COLORADO DEPARTMENT OF TRANSPORTATION
CDPHE	COLORADO DEPARTMENT OF PUBLIC HEALTH AND ENVIRONMENT
CEM	CEMENT
CFM	CUBIC FEET PER MINUTE
CFS	CUBIC FEET PER SECOND
CIG	COLORADO INTERSTATE GAS
CIP	CAST IRON PIPE
CJP	COMPLETE JOINT PENETRATION
CL	CENTERLINE
CLASS	CLASSIFICATION
CLR	CLEAR
CLSM	CONTROLLED LOW STRENGTH MATERIAL
CML&C	CEMENT MORTAR LINED & COATED
CMP	CORRUGATED METAL PIPE
CNG	COLORADO NATURAL GAS
CO	CLEANOUT
COMB	COMBINATION
CONC	CONCRETE
CONN	CONNECTING
CONSTR	CONSTRUCT
CONT	CONTINUED/CONTINUATION
COORD	COORDINATE
CORP	CORPORATION
CPLG	COUPLING
CP	CATHODIC PROTECTION
CPP	CORRUGATED PLASTIC PIPE
CR	COUNTY ROAD
CSG	CASING
CT	COUNT, COURT
CTR	CENTER
CTRD	CENTERED
CU	CUBIC
CULV	CULVERT
CY	CUBIC YARD

D	STORM DRAIN, DIAMETER
DC	DEDICATED CORRIDOR
DET	DETAIL
DI	DROP INLET, DUCTILE IRON
DIA	DIAMETER
DIP	DUCTILE IRON PIPE
DIR	DIRECTION
DIST	DISTANCE
DN	DOWN
DR	DRAIN, DRIVE
DWG	DRAWING
E	EAST, EASTING, ELECTRIC
EA	EACH
ECC	ECCENTRIC
ECR	END CURB RETURN
EF	EACH FACE
ELEV, EL	ELEVATION
ELB,ELL	ELBOW
EMBED	EMBEDDED
ENGR	ENGINEER
E(OH)	OVERHEAD ELECTRIC
E(UG)	UNDERGROUND ELECTRIC
EOP	EDGE OF PAVEMENT
EQ	EQUATION
EQL	EQUAL
EQPT	EQUIPMENT
EQ SP	EQUALLY SPACED
EW	EACH WAY
EWEF	EACH WAY EACH FACE
EXC	EXCAVATE
EXP	EXPOSED, EXPANSION
EXST, EX	EXISTING
EY	EXPRESSWAY
FBO	FURNISHED BY OTHERS
FC	FLEXIBLE COUPLING
FCA	FLEXIBLE COUPLING ADAPTER
FDN	FINAL DESIGN NORTH (PIPELINE)
FE	FIELD EXPLORATION
FG	FINISH GRADE
FHY	FIRE HYDRANT
FMIS	FACILITY INFORMATION MANAGEMENT SYSTEM
FL	FLOWLINE
FLEX	FLEXIBLE
FLG	FLANGE, FLANGED
FLL, FL	FLOW LINE
FO	FIBER OPTIC
FOT	FLAT ON TOP
FPT	FEMALE PIPE THREAD
FRP	FIBERGLASS REINFORCED PLASTIC
FPS	FOOT PER SECOND
FT	FOOT, FEET
FTG	FOOTING
FVA	FOUNTAIN VALLEY AUTHORITY
FUT	FUTURE
FW	FINISHED WATER LINE
FW1	FINISHED WATER 1
FW2	FINISHED WATER 2
FW3	FINISHED WATER 3
G	GAS MAIN
GA	GAGE
GAL	GALLON
GALV	GALVANIZED
GB	GRADE BREAK
GND,GRND	GROUND
GS	GAS SERVICE LINE
GSP	GALVANIZED STEEL PIPE
GV	GATE VALVE
GVL	GRAVEL
HBP	HOT BITUMINOUS PAVING
HCL	HORIZONTAL CONTROL LINE
HDR	HEADER
HERCP	HORIZONTAL ELLIPTICAL REINFORCED CONCRETE PIPE
HG	HYDRAULIC GRADIENT
HGL	HYDRAULIC GRADE LINE
HGT	HEIGHT
HH	HANDHOLE
HI	HIGH
HORZ	HORIZONTAL
HP	HIGH POINT, HIGH PRESSURE
HPI	HORIZONTAL POINT OF INTERSECTION
HWY	HIGHWAY
HYDID	HYDRANT INSIDE DIAMETER
I-25	INTERSTATE 25
ID	INNER DIAMETER, INSIDE DIAMETER
IF	INSULATING FLANGE
IN.	INCH
INV	INVERT
IP	IRON PIPE
IRR	IRRIGATION
IV, IVV	ISOLATION VALVE VAULT

JT	JOINT
kV	KILO VOLT
L	LEFT, ANGLE, LENGTH, LOAD
LAT'L	LATERAL
LF	LINEAR FEET
LG	LENGTH
LN	LANE
LP	LOW POINT, LIQUID PETROLEUM PIPELINE
L-R	LEFT TO RIGHT
LT	LEFT
MATL	MATERIAL
MAX	MAXIMUM
MB	MACHINE BOLT
MGD	MILLION GALLONS PER DAY
MTP	MAIN TRANSMISSION PIPELINE
MFR	MANUFACTURER
MH	MANHOLE
MIN	MINIMUM, MINUTE
MISC	MISCELLANEOUS
MON	MONUMENT
MPH	MILES PER HOUR
MUTCD	MANUAL OF UNIFORM TRAFFIC CONTROL DEVICES FOR STREETS AND HIGHWAYS
MTR	METER
MVEA	MOUNTAIN VIEW ELECTRIC ASSOCIATION
N	NORTH, NORTHING
NA	NOT APPLICABLE
NAD	NORTH AMERICAN DATUM
NACE	NATIONAL GEODETIC VERTICAL DATUM
NGVD	NATIONAL ASSOCIATION OF CORROSION ENGINEERS
NIC	NOT IN CONTRACT
NO.,#	NUMBER, NUMBERING
NOM	NOMINAL
NPT	NATIONAL PIPE THREAD
NTS	NOT TO SCALE
O&M	OPERATION & MAINTENANCE
OC	ON CENTER
OD	OUTSIDE DIAMETER
OE	OVERHEAD ELECTRIC
OG	ORIGINAL GROUND
OH	OVERHEAD
OPNG	OPENING
ORIG	ORIGINAL
OSHA	OCCUPATIONAL SAFETY & HEALTH ADMINISTRATION
P	POTHOLE LOCATION, PERMANENT
PE, P/E	PERMANENT EASEMENT, POLYETHYLENE, PLAIN END
PC	POINT OF CURVE
PCC	POINT OF COMPOUND CURVE
PCCP	PRETENSIONED CONCRETE CYLINDER PIPE
PERM	PERMANENT
PI	POINT OF INTERSECTION
PL	PLATE, PLACE
PL, P/L	PROPERTY LINE,
POB	POINT OF BEGINNING
POC	POINT ON CURVE
POE	POINT OF END
PP	POWER POLE, PLAN AND PROFILE
PRC	POINT OF REVERSE CURVE
PREFAB	PREFABRICATED
PRO	PROPOSED
PS	PUMPING STATION
PSCO	PUBLIC SERVICE COMPANY COLORADO
PSF	POUNDS PER SQUARE FOOT
PSI	POUNDS PER SQUARE INCH
PSIG	POUNDS PER SQUARE INCH GAGE
PT	POINT OF TANGENCY
PUE, DE, & EE	PUBLIC UTILITY, DRAINAGE, AND EQUESTRIAN EASEMENT
PVI	POINT OF VERTICAL INTERSECTION (USED INTERCHANGABLY WITH VPI)
PVMT	PAVEMENT
PVC	POLYVINYL CHLORIDE
PW	PUEBLO WEST
R	RIGHT
R,RAD	RADIUS
RCB	REINFORCED CONCRETE BOX
RCP	REINFORCED CONCRETE PIPE
RCPA	REINFORCED CONCRET PIPE ARCH
RD	ROAD, RECORD DRAWING
RDCR	REDUCER
REINF	REINFORCE
REF	REFER, REFERENCE
REM	REMOVED
REQD	REQUIRED
RH	RODHOLE
RP	RADIUS POINT
RR	RAILROAD
RT	RIGHT
R/W,ROW	RIGHT-OF-WAY

RW	RAW WATER
RW N1	RAW WATER PIPELINE NORTH 1
RW N2	RAW WATER PIPELINE NORTH 2
RW S1	RAW WATER PIPELINE SOUTH 1
RW S2	RAW WATER PIPELINE SOUTH 2
RW S3	RAW WATER PIPELINE SOUTH 3
RW S4	RAW WATER PIPELINE SOUTH 4
S	SOUTH, SLOPE
S2	SOUTH 2
SAN,S	SANITARY SEWER MAIN
SCFM	STANDARD CUBIC FEET PER MINUTE
SCH	SCHEDULE
SD	STORM DRAIN
SDS	SOUTHERN DELIVERY SYSTEM
SDSP	SOUTHERN DELIVERY SYSTEM PIPELINE
SE	SEWAGE EFFLUENT
SECPA	SOUTHEAST COLORADO POWER ASSOCIATION
SERV	SERVICE
SF	SHEATH FOOTAGE
SH	SHEET
SHTS	SHEETS
SIG	SIGNAL
SIM	SIMILAR
SLP	SLOPE
SPEC	SPECIFICATIONS
SPRR	SOUTHERN PACIFIC RAILROAD
SQ FT	SQUARE FEET
SS	SANITARY SEWER
SST,SS	STAINLESS STEEL
STA	STATION
STD	STANDARD
STL	STEEL
STRUCT	STRUCTURE
SUB	ELECTRICAL SUB STATION
SWMP	STORMWATER MANAGEMENT PLAN
SYMM	SYMMETRICAL
T	TANGENT, TELEPHONE,
T & B	TOP AND BOTTOM
t	THICKNESS
TBM	TEMPORARY BENCHMARK
TC	TOP OF CURB, TEMPORARY CONSTRUCTION
TCE	TEMPORARY CONSTRUCTION EASEMENT
TEL	TELEPHONE
TF	TRENCH FOOTAGE
TEMP	TEMPORARY
TO	TOP OF
TOC	TOP OF CONCRETE
TOP	TOP OF PIPE
TOPO	TOPOGRAPHY
TP	TEST PIT
TRANS	TRANSITION
TRI-STATE	TRI-STATE GENERATION & TRANSMISSION ASSOCIATION, INC.
TS	TEST STATION
T(UG)	UNDERGROUND TELEPHONE
TV	TELEVISION
TYP	TYPICAL
UG	UNDERGROUND
UGE	UNDERGROUND ELECTRIC
UNO	UNLESS NOTED OTHERWISE
UPRR	UNION PACIFIC RAILROAD
UT	ULTRASONIC TESTING
V	VALVE, VENT
VB	VERTICAL BEND
VC	VERTICAL CURVE
VCP	VITRIFIED CLAY PIPE
VERT	VERTICAL
VPI	VERTICAL POINT OF INTERSECTION (USED INTERCHANGABLY WITH PVI)
VV	VACUUM VALVE
W	WATER,WEST
W/	WITH
WCPS	WILLIAMS CREEK PUMP STATION
WL	WORK LIMIT
WM	WATER METER
WS	WATER SURFACE, WATER STOP, WATER SERVICE
WSP	WELDED STEEL PIPE
W/O	WITHOUT
WSEL	WATER SURFACE ELEVATION
WT	WEIGHT
WTP	WATER TREATMENT PLANT
WY	WAY
XCEL	XCEL ENERGY

NOTE:

THIS IS A STANDARD ABBREVIATION SHEET. THEREFORE, NOT ALL ABBREVIATIONS SHOWN MAY BE USED ON THIS PROJECT.

COLORADO LICENSED PROFESSIONAL ENGINEER
GARY L. HENRY
39310
6/30/11

DSGN	E FORD
DR	B NORVILLE
CHK	W CHRISTOFFERSON
APVD	J HENRY

NO.	DATE	REVISION	BY	APVD

VERIFY SCALE
BAR IS ONE INCH ON ORIGINAL DRAWING.
0 1"
IF NOT ONE INCH ON THIS SHEET, ADJUST SCALES ACCORDINGLY.

CH2MHILL
Colorado Springs, CO 80903

SOUTHERN DELIVERY SYSTEM
RAW WATER PIPELINE
SOUTH SECTION ONE

GENERAL

ABBREVIATIONS

SHEET	8
DWG	S1-G-8
DATE	JULY 2011
PROJ	171473.20.SP

CIVIL LEGEND

EXISTING FEATURES

- OE — OVERHEAD ELECTRICAL
- E — UNDERGROUND ELECTRIC
- LP — UNDERGROUND LIQUID PETROLEUM
- T — UNDERGROUND TELEPHONE
- FO — FIBER OPTICS LINE
- G — GAS PIPELINE
- W — WATER PIPELINE
- SS — SANITARY SEWER OR SANITARY SEWER FORCE MAIN
- 5000 — CONTOUR W/ ELEVATION
- 28 — SURVEY CONTROL POINT W/ POINT NUMBER
- POWER POLE
- PL — PROPERTY LINE
- FENCE
- SILT FENCE
- WOOD FENCE
- CHAIN LINK FECE
- NON SDS PROJECT UTILITY EASEMENT
- SECTION CORNER
- 1/4 SECTION CORNER
- MANHOLE
- FIRE HYDRANT
- TELEPHONE PEDESTAL

NEW FEATURES

- S 100+00 — NEW PIPELINE W/ STATIONING
- FDS-XXX OR PL-XXX — BORE HOLE LOCATION WITH NUMBER
- COMBINATION AIR RELEASE VALVE (PLAN)
- BLOW OFF ASSEMBLY (PLAN)
- TCE — TEMPORARY CONSTRUCTION EASEMENT
- P/E — CITY OF COLORADO SPRINGS PERMANENT EASEMENT
- DC — DEDICATED CORRIDOR
- WL — WORK LIMITS
- FO — FIBER OPTIC CONDUIT
- ACCESS MANWAY
- PS1-XX — POTHOLE
- HANDHOLE
- TS — TEST STATION
- SURFACE MONITORING POINT
- STAGING AREA / TURN AROUND

NOTES:

1. UTILITY LINE TYPE QUALITY LEVEL "B" SHOWN IN LEGEND. LINE TYPES FOR EXISTING UTILITY FEATURES MAY VARY. SEE NOTES ON DWG S1-G-13.
2. SEE DWG S1-EC-1 FOR EROSION CONTROL LEGEND.

MISCELLANEOUS

SHEET IDENTIFICATION SYSTEM

SECTION (LETTER) OR DETAIL (NUMERAL) DESIGNATION — A

P-2 — SHEET NUMBER (REPLACE WITH A LINE IF TAKEN AND SHOWN ON SAME DRAWING)

• ON DRAWING WHERE SECTION OR DETAIL IS SHOWN: SHEET NUMBER(S) WHERE TAKEN

DETAIL AND SECTION DESIGNATION

3305-762

STANDARD DETAIL DESIGNATION (NUMERAL)

SHOWN ON STANDARD DETAIL DRAWING

PIPING DESIGNATION

EXAMPLE

66" RW S1

66" — NOMINAL PIPE DIAMETER

RW S1 — FLOW STREAM IDENTIFICATION LEGEND

MECHANICAL LEGEND

PIPE AND FITTING SYMBOLS

DOUBLE LINE | SINGLE LINE

- EXISTING PIPE
- NEW PIPE
- EXISTING PIPE TO BE ABANDONED
- EXISTING PIPE TO BE REMOVED
- WELDED JOINT
- GROOVED END JOINT
- FLANGED JOINT
- MECHANICAL JOINT
- BELL & SPIGOT JOINT
- HUB & SPIGOT JOINT (RUBBER GASKET)
- BALL JOINT
- GROOVED END ADAPTER FLANGE
- FLANGED COUPLING ADAPTER
- FLANGED COUPLING ADAPTER W/ THRUST TIES
- FLEXIBLE COUPLING
- FLEXIBLE COUPLING WITH THRUST TIES
- STEEL BELLOWS EXP JOINT
- ELASTOMER BELLOWS EXP JOINT
- ELBOW UP
- ELBOW DOWN
- TEE UP
- TEE DOWN
- LATERAL UP
- LATERAL DOWN
- CONCENTRIC REDUCER
- ECCENTRIC REDUCER
- UNION
- CAP

VALVE SYMBOLS

- GATE
- BUTTERFLY
- GLOBE
- BALL
- SEAT PORT ECCENTRIC PLUG
- PLUG OR COCK
- DIAPHRAM
- SWING CHECK
- BALL CHECK
- CARV
- PRESSURE CONTROL

NOTES:

1. ONLY FLANGED END CONNECTIONS ARE SHOWN HERE FOR DOUBLE LINE FITTINGS. FITTINGS WITH OTHER END PATTERNS ARE SHOWN SIMILARLY ON THE CONSTRUCTION DRAWINGS. ALSO SEE PIPING SPECIFICAITONS.
2. SYMBOLS SHOWN HERE FOR SINGLE LINE FITTINGS ARE GENERIC ONLY. REFER TO PIPING SPECIFICATIONS FOR SPECIFIC END CONNECTIONS FOR SINGLE LINE PIPE AND FITTINGS.
3. EXISTING PIPE AND EQUIPMENT IS SHOWN LIGHT-LINED AND/OR SCREENED AND IS NOTED AS EXISTING. NEW PIPING AND EQUIPMENT IS SHOWN HEAVY-LINED.

- ANCHOR
- ELBOW, 90 DEGREE
- CROSS
- TEE
- ELBOW, 45 DEGREE
- LATERAL

VALVE DESIGNATION

12", V300

- V300 — REFERENCE NUMBER AS FOUND IN SPECIFICATION SECTION 40 27 02
- V — VALVE DESIGNATION (V)
- 12" — SIZE

THIS IS A STANDARD LEGEND SHEET. THEREFORE, NOT ALL INFORMATION SHOWN MAY BE USED ON THIS PROJECT.

STRUCTURAL LEGEND

SYMBOL	DESCRIPTION
	CLSM (TYPE J) OR GROUT
OR	CONCRETE
	CHECKER PLATE
	GRATING
	STRUCTURAL STEEL
	TYPE O BACKFILL
	CONCRETE FILL
	TYPE D FILL
	TYPE E OR TYPE C FILL
	TYPE K BACKFILL
	TYPE P BACKFILL
	SUBGRADE
	AGGR BASE (TYPE G) OR GRANULAR FILL (TYPE F) OR DRAIN ROCK (TYPE H) OR GRAVEL (TYPE A)
	RIPRAP
	GRADE
	ROCK EXCAVATION

COLORADO LICENSED PROFESSIONAL ENGINEER — CODY L. HENRY — 39310 — 6/30/11

DSGN	E FORD				
DR	B NORVILLE				
CHK	W CHRISTOFFERSON				
APVD	J HENRY	NO.	DATE	REVISION	BY	APVD

VERIFY SCALE — BAR IS ONE INCH ON ORIGINAL DRAWING. 0 — 1" — IF NOT ONE INCH ON THIS SHEET, ADJUST SCALES ACCORDINGLY.

CH2MHILL — Colorado Springs, CO 80903

SOUTHERN DELIVERY SYSTEM
RAW WATER PIPELINE
SOUTH SECTION ONE

GENERAL

CIVIL/STRUCTURAL/MECHANICAL LEGENDS

SHEET	9
DWG	S1-G-9
DATE	JULY 2011
PROJ	171473.20.SP

Colorado Springs Utilities Project Number: SDS-002 CSU Work Order Number: 1146977

FILENAME: SP101nG09d_171473.dgn PLOT DATE: 6/8/2011 PLOT TIME: 1:11:18 PM

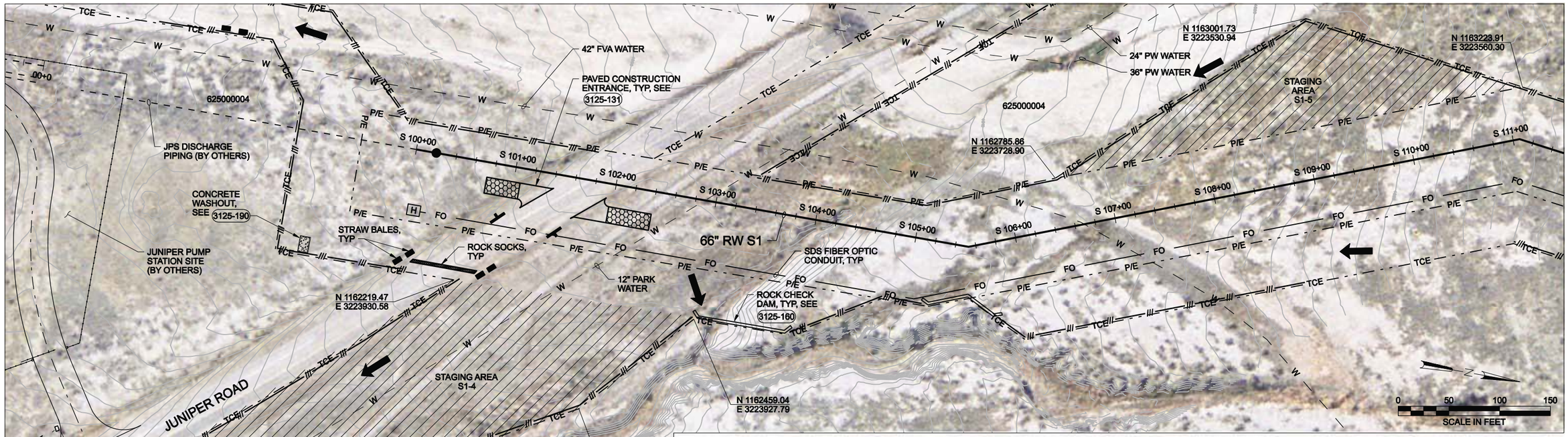

STAGING AREAS S1-4 AND S1-5 1

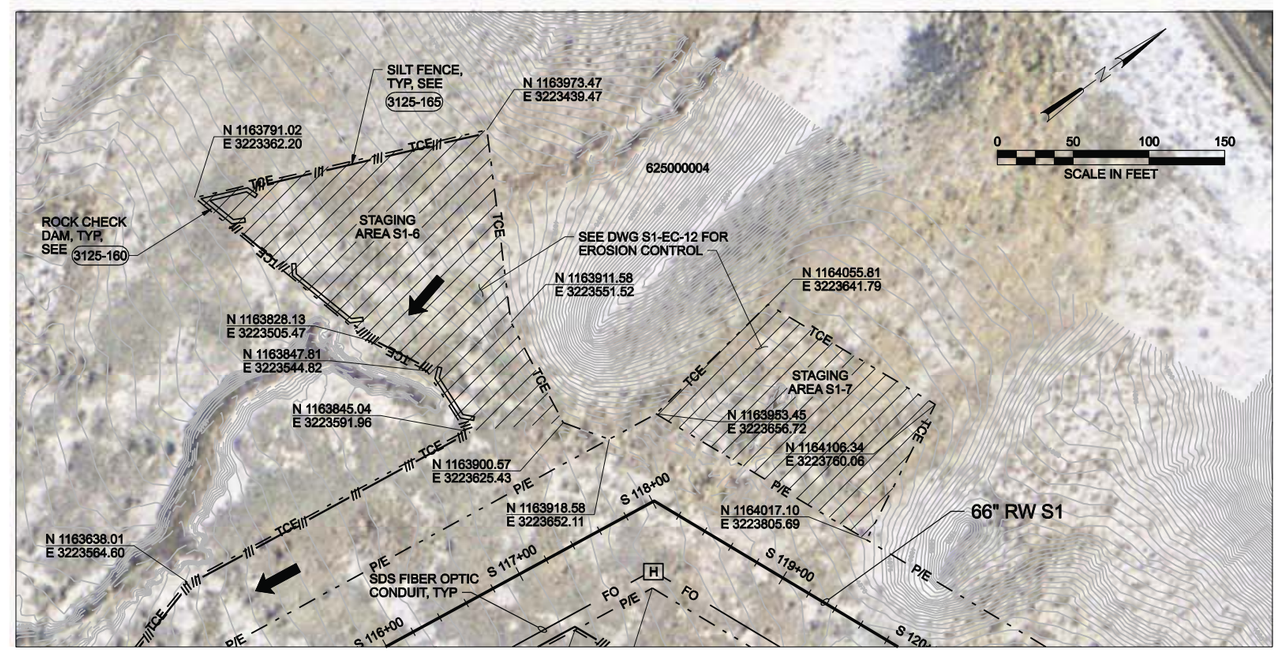

STAGING AREAS S1-6 AND S1-7 1

COLORADO LICENSED
JODY L. HENRY
39310
PROFESSIONAL ENGINEER

DSGN	E FORD					
DR	B NORVILLE					
CHK	G SIMPSON	1	7/13/11	ADDENDUM NO. 1 - TCE ADDED	BN	JH
APVD	J HENRY	NO.	DATE	REVISION	BY	APVD

VERIFY SCALE
BAR IS ONE INCH ON ORIGINAL DRAWING.
0 1"
IF NOT ONE INCH ON THIS SHEET, ADJUST SCALES ACCORDINGLY.

CH2MHILL
Colorado Springs, CO 80903

SOUTHERN DELIVERY SYSTEM
RAW WATER PIPELINE
SOUTH SECTION ONE

GENERAL

STAGING AREAS S1-4, S1-5, S1-6, AND S1-7

SHEET	14A
DWG	S1-G-14A
DATE	JULY 2011
PROJ	171473.20.SP

Colorado Springs Utilities Project Number: SDS-002 CSU Work Order Number: 1146977

FILENAME: SP101nG14d_171473.dgn PLOT DATE: 8/5/2011 PLOT TIME: 9:55:06 AM

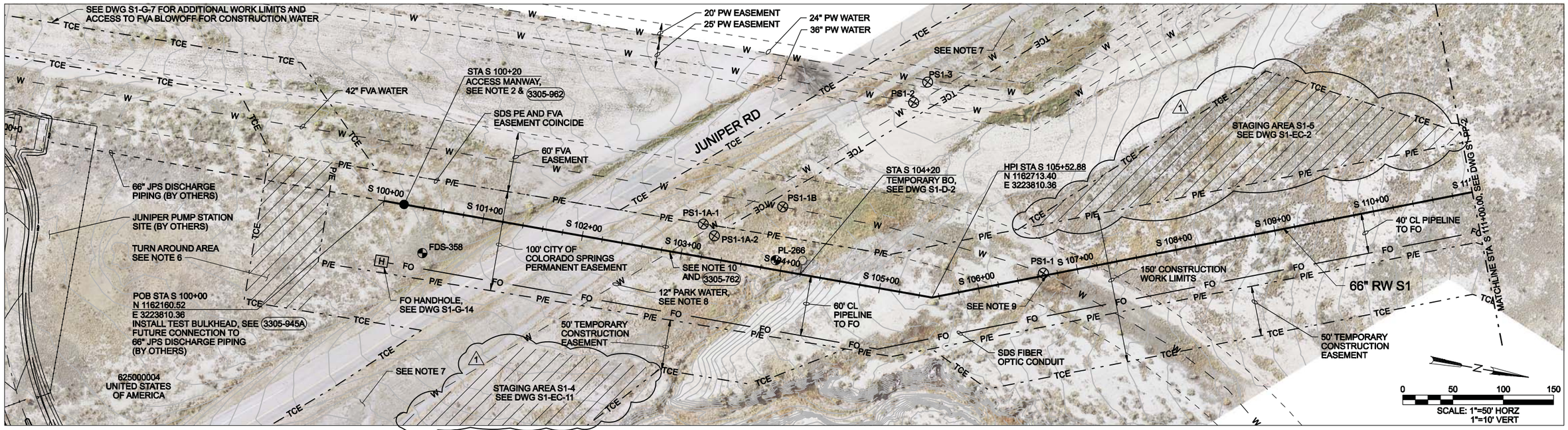

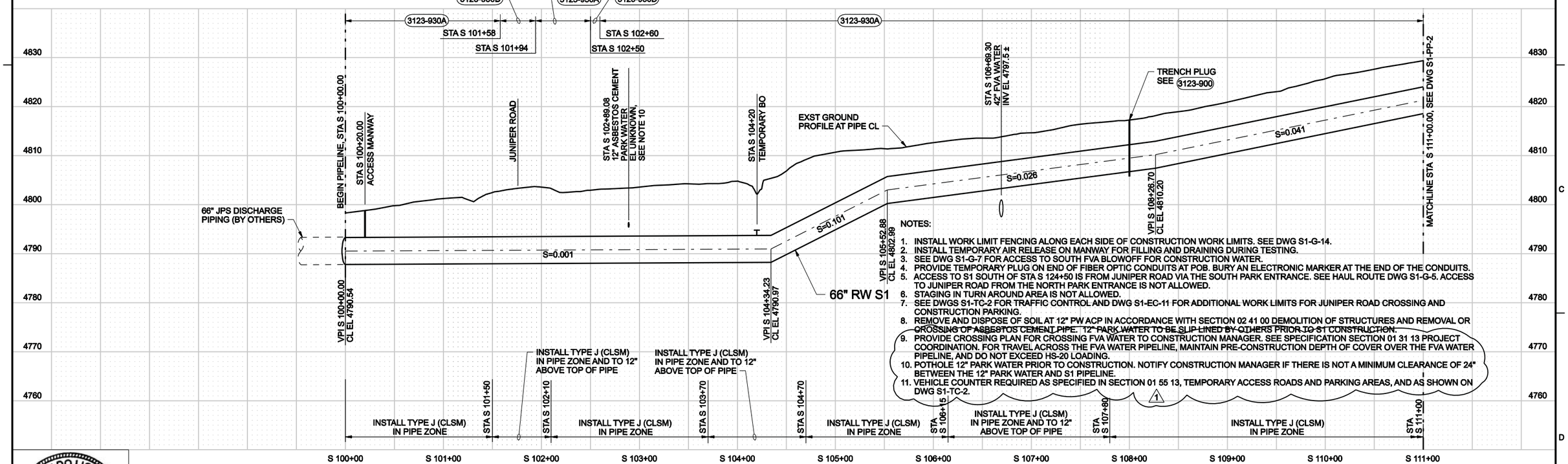

NOTES:

1. INSTALL WORK LIMIT FENCING ALONG EACH SIDE OF CONSTRUCTION WORK LIMITS. SEE DWG S1-G-14.
2. INSTALL TEMPORARY AIR RELEASE ON MANWAY FOR FILLING AND DRAINING DURING TESTING.
3. SEE DWG S1-G-7 FOR ACCESS TO SOUTH FVA BLOWOFF FOR CONSTRUCTION WATER.
4. PROVIDE TEMPORARY PLUG ON END OF FIBER OPTIC CONDUITS AT POB. BURY AN ELECTRONIC MARKER AT THE END OF THE CONDUITS.
5. ACCESS TO S1 SOUTH OF STA S 124+50 IS FROM JUNIPER ROAD VIA THE SOUTH PARK ENTRANCE. SEE HAUL ROUTE DWG S1-G-5. ACCESS TO JUNIPER ROAD FROM THE NORTH PARK ENTRANCE IS NOT ALLOWED.
6. STAGING IN TURN AROUND AREA IS NOT ALLOWED.
7. SEE DWGS S1-TC-2 FOR TRAFFIC CONTROL AND DWG S1-EC-11 FOR ADDITIONAL WORK LIMITS FOR JUNIPER ROAD CROSSING AND CONSTRUCTION PARKING.
8. REMOVE AND DISPOSE OF SOIL AT 12" PW ACP IN ACCORDANCE WITH SECTION 02 41 00 DEMOLITION OF STRUCTURES AND REMOVAL OR ~~CROSSING OF ASBESTOS CEMENT PIPE. 12" PARK WATER TO BE SLIP LINED BY OTHERS PRIOR TO S1 CONSTRUCTION.~~
9. PROVIDE CROSSING PLAN FOR CROSSING FVA WATER TO CONSTRUCTION MANAGER. SEE SPECIFICATION SECTION 01 31 13 PROJECT COORDINATION. FOR TRAVEL ACROSS THE FVA WATER PIPELINE, MAINTAIN PRE-CONSTRUCTION DEPTH OF COVER OVER THE FVA WATER PIPELINE, AND DO NOT EXCEED HS-20 LOADING.
10. POTHOLE 12" PARK WATER PRIOR TO CONSTRUCTION. NOTIFY CONSTRUCTION MANAGER IF THERE IS NOT A MINIMUM CLEARANCE OF 24" BETWEEN THE 12" PARK WATER AND S1 PIPELINE.
11. VEHICLE COUNTER REQUIRED AS SPECIFIED IN SECTION 01 55 13, TEMPORARY ACCESS ROADS AND PARKING AREAS, AND AS SHOWN ON DWG S1-TC-2.

COLORADO LICENSED
JODY L. HENRY
39310
PROFESSIONAL ENGINEER

DSGN	E FORD
DR	B NORVILLE
CHK	G SIMPSON
APVD	J HENRY

NO.	DATE	REVISION	BY	APVD
1	7/13/11	ADDENDUM NO. 1 - TCE ADDED, NOTES	BN	JH

VERIFY SCALE
BAR IS ONE INCH ON ORIGINAL DRAWING.
0 1"
IF NOT ONE INCH ON THIS SHEET, ADJUST SCALES ACCORDINGLY.

CH2MHILL
Colorado Springs, CO 80903

SOUTHERN DELIVERY SYSTEM
RAW WATER PIPELINE
SOUTH SECTION ONE

PLAN AND PROFILE

POB STATION S 100+00 TO STATION S 111+00

SHEET	15
DWG	S1-PP-1
DATE	JULY 2011
PROJ	171473.20.SP

Colorado Springs Utilities Project Number: SDS-002 CSU Work Order Number: 1146977

FILENAME: SP105nP01d_171473.dgn PLOT DATE: 7/20/2011 PLOT TIME: 8:31:36 AM

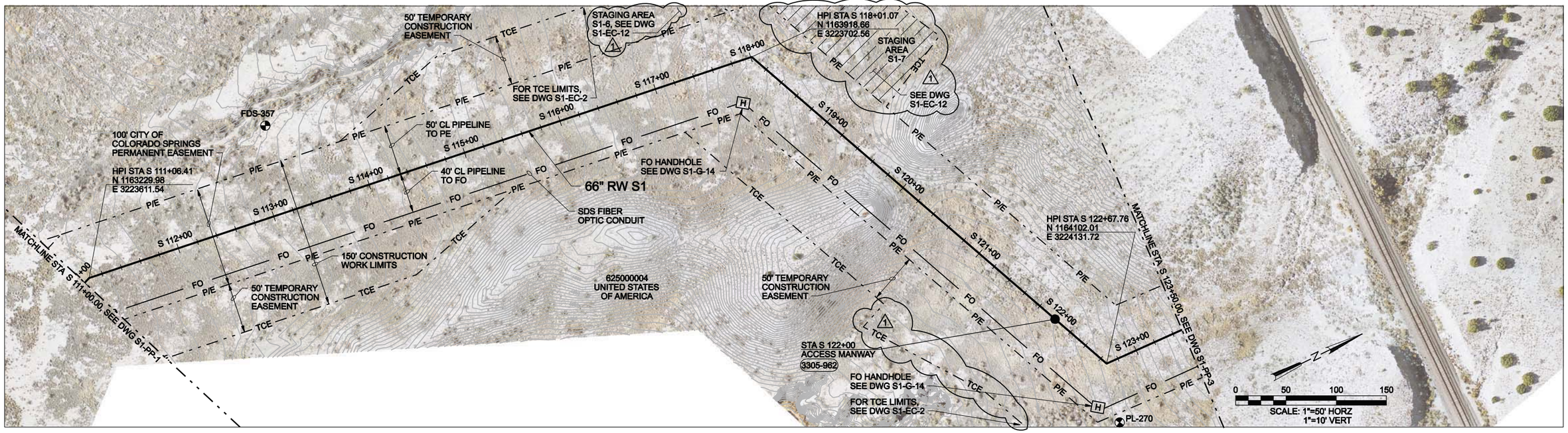

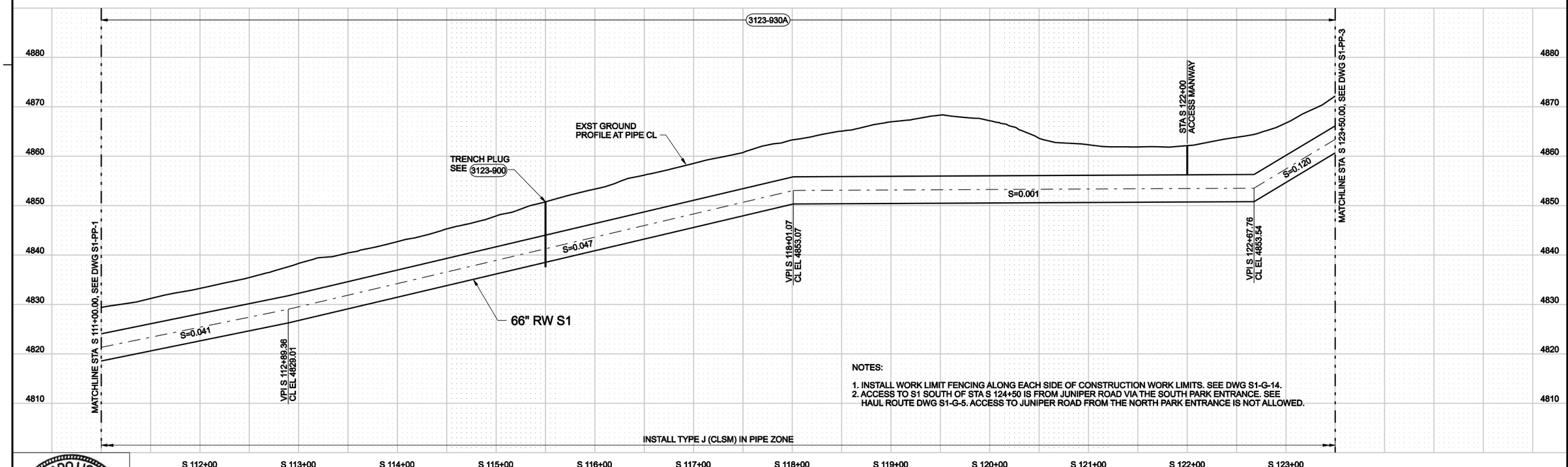

NOTES:

1. INSTALL WORK LIMIT FENCING ALONG EACH SIDE OF CONSTRUCTION WORK LIMITS. SEE DWG S1-G-14.
2. ACCESS TO S1 SOUTH OF STA S 124+50 IS FROM JUNIPER ROAD VIA THE SOUTH PARK ENTRANCE. SEE HAUL ROUTE DWG S1-G-5. ACCESS TO JUNIPER ROAD FROM THE NORTH PARK ENTRANCE IS NOT ALLOWED.

COLORADO LICENSED JODY L. HENRY 39310 PROFESSIONAL ENGINEER

DSGN	E FORD
DR	B NORVILLE
CHK	G SIMPSON
APVD	J HENRY

NO.	DATE	REVISION	BY	APVD
1	7/13/11	ADDENDUM NO. 1 - TCE ADDED	BN	JH

VERIFY SCALE
BAR IS ONE INCH ON ORIGINAL DRAWING.
0 1"
IF NOT ONE INCH ON THIS SHEET, ADJUST SCALES ACCORDINGLY.

CH2MHILL
Colorado Springs, CO 80903

SOUTHERN DELIVERY SYSTEM
RAW WATER PIPELINE
SOUTH SECTION ONE

PLAN AND PROFILE

STATION S 111+00 TO STATION S 123+50

SHEET	16
DWG	S1-PP-2
DATE	JULY 2011
PROJ	171473.20.SP

Colorado Springs Utilities Project Number: SDS-002 CSU Work Order Number: 1146977

FILENAME: SP105nP02d_171473.dgn PLOT DATE: 7/11/2011 PLOT TIME: 10:31:43 AM

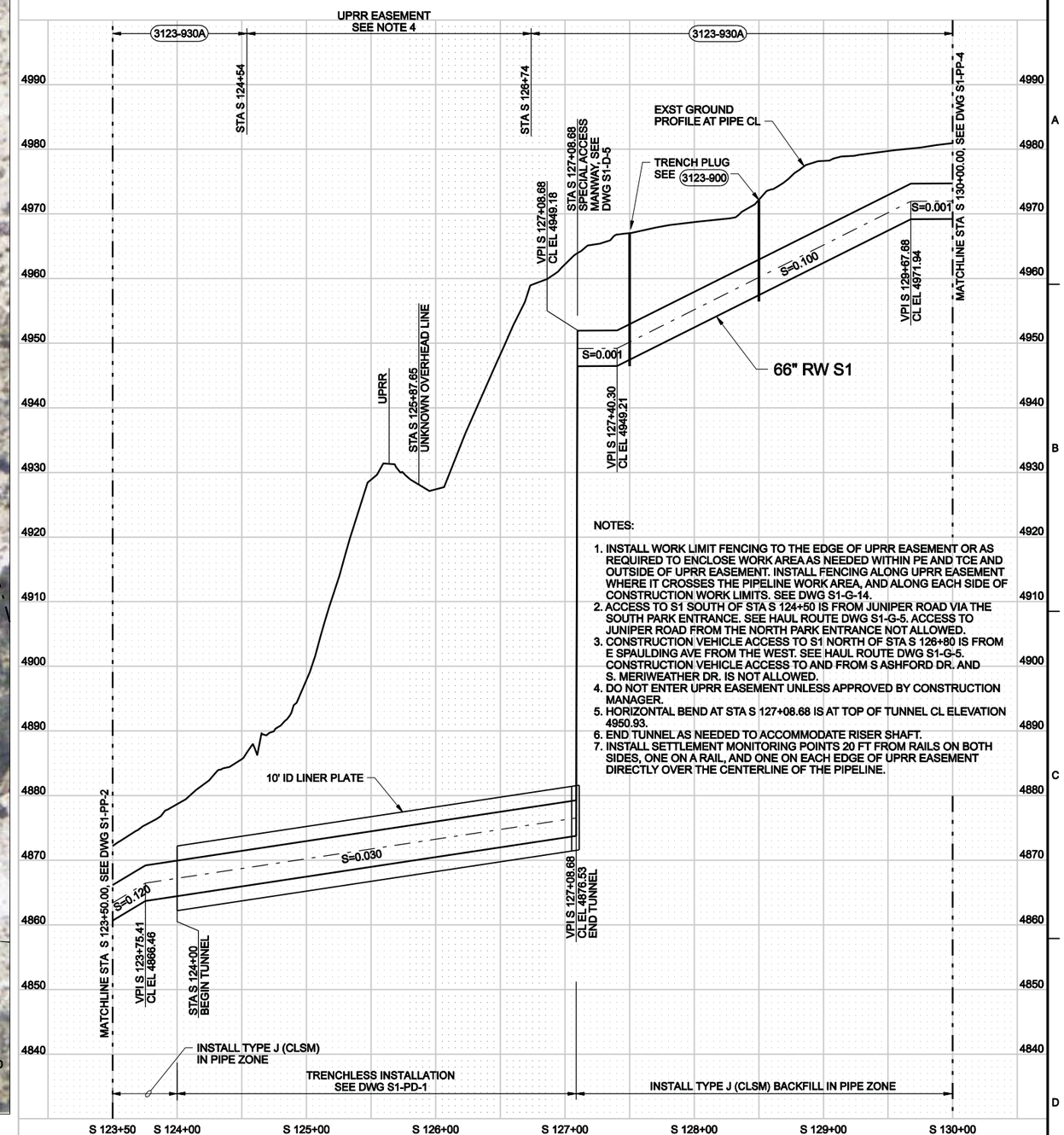

NOTES:

1. INSTALL WORK LIMIT FENCING TO THE EDGE OF UPRR EASEMENT OR AS REQUIRED TO ENCLOSE WORK AREA AS NEEDED WITHIN PE AND TCE AND OUTSIDE OF UPRR EASEMENT. INSTALL FENCING ALONG UPRR EASEMENT WHERE IT CROSSES THE PIPELINE WORK AREA, AND ALONG EACH SIDE OF CONSTRUCTION WORK LIMITS. SEE DWG S1-G-14.
2. ACCESS TO S1 SOUTH OF STA S 124+50 IS FROM JUNIPER ROAD VIA THE SOUTH PARK ENTRANCE. SEE HAUL ROUTE DWG S1-G-5. ACCESS TO JUNIPER ROAD FROM THE NORTH PARK ENTRANCE NOT ALLOWED.
3. CONSTRUCTION VEHICLE ACCESS TO S1 NORTH OF STA S 126+80 IS FROM E SPAULDING AVE FROM THE WEST. SEE HAUL ROUTE DWG S1-G-5. CONSTRUCTION VEHICLE ACCESS TO AND FROM S ASHFORD DR. AND S. MERIWEATHER DR. IS NOT ALLOWED.
4. DO NOT ENTER UPRR EASEMENT UNLESS APPROVED BY CONSTRUCTION MANAGER.
5. HORIZONTAL BEND AT STA S 127+08.68 IS AT TOP OF TUNNEL CL ELEVATION 4950.93.
6. END TUNNEL AS NEEDED TO ACCOMMODATE RISER SHAFT.
7. INSTALL SETTLEMENT MONITORING POINTS 20 FT FROM RAILS ON BOTH SIDES, ONE ON A RAIL, AND ONE ON EACH EDGE OF UPRR EASEMENT DIRECTLY OVER THE CENTERLINE OF THE PIPELINE.

COLORADO LICENSED
CODY L. HENRY
89310
6/30/11
PROFESSIONAL ENGINEER

DSGN	E FORD / A FINNEY
DR	B NORVILLE
CHK	G SIMPSON
APVD	J HENRY

NO.	DATE	REVISION	BY	APVD

VERIFY SCALE
BAR IS ONE INCH ON ORIGINAL DRAWING.
0 1"
IF NOT ONE INCH ON THIS SHEET, ADJUST SCALES ACCORDINGLY.

CH2MHILL
Colorado Springs, CO 80903

SOUTHERN DELIVERY SYSTEM
RAW WATER PIPELINE
SOUTH SECTION ONE

PLAN AND PROFILE

STATION S 123+50 TO STATION S 130+00

SHEET	17
DWG	S1-PP-3
DATE	JULY 2011
PROJ	171473.20.SP

Colorado Springs Utilities Project Number: SDS-002 CSU Work Order Number: 1146977

FILENAME: SP105nP03d_171473.dgn PLOT DATE: 6/27/2011 PLOT TIME: 1:01:59 PM

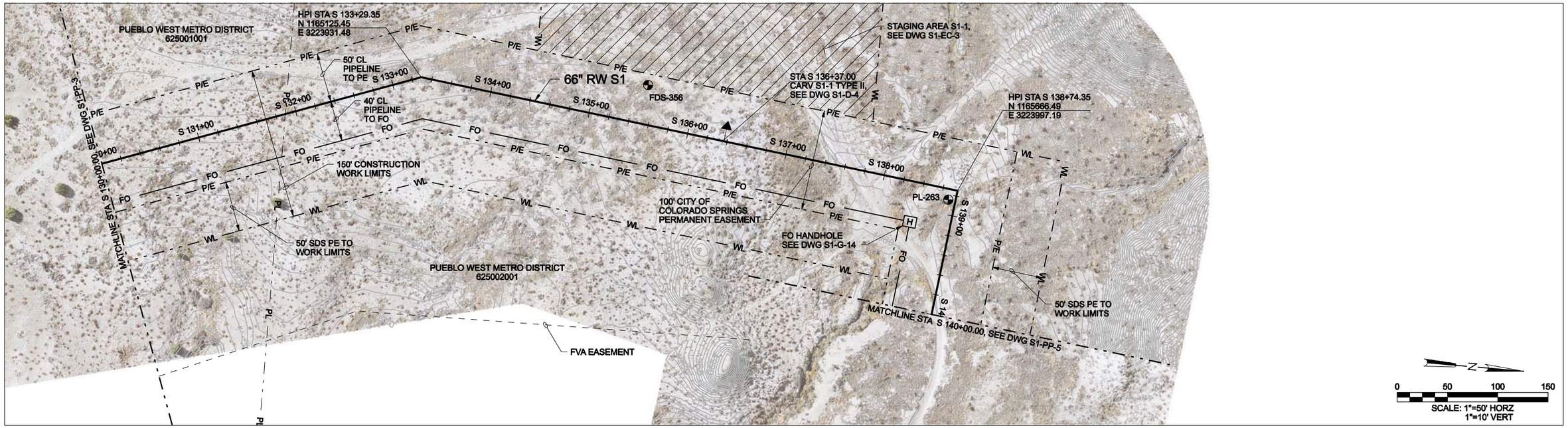

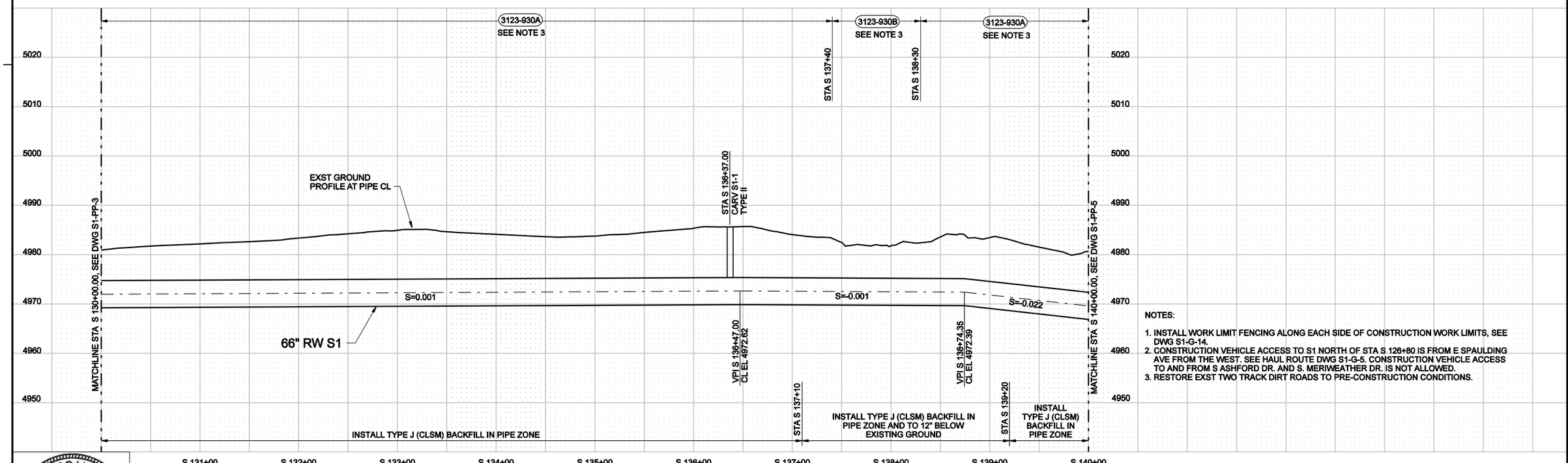

NOTES:

1. INSTALL WORK LIMIT FENCING ALONG EACH SIDE OF CONSTRUCTION WORK LIMITS, SEE DWG S1-G-14.
2. CONSTRUCTION VEHICLE ACCESS TO S1 NORTH OF STA S 126+80 IS FROM E SPAULDING AVE FROM THE WEST. SEE HAUL ROUTE DWG S1-G-5. CONSTRUCTION VEHICLE ACCESS TO AND FROM S ASHFORD DR. AND S. MERIWEATHER DR. IS NOT ALLOWED.
3. RESTORE EXST TWO TRACK DIRT ROADS TO PRE-CONSTRUCTION CONDITIONS.

COLORADO LICENSED
GODY L. HENRY
39310
6/30/11
PROFESSIONAL ENGINEER

DSGN	E FORD
DR	B NORVILLE
CHK	G SIMPSON
APVD	J HENRY

NO.	DATE	REVISION	BY	APVD

VERIFY SCALE
BAR IS ONE INCH ON ORIGINAL DRAWING.
0 1"
IF NOT ONE INCH ON THIS SHEET, ADJUST SCALES ACCORDINGLY.

CH2MHILL
Colorado Springs, CO 80903

SOUTHERN DELIVERY SYSTEM
RAW WATER PIPELINE
SOUTH SECTION ONE

PLAN AND PROFILE

STATION S 130+00 TO STATION S 140+00

SHEET	18
DWG	S1-PP-4
DATE	JULY 2011
PROJ	171473.20.SP

Colorado Springs Utilities Project Number: SDS-002 CSU Work Order Number: 1146977

FILENAME: SP105nP04d_171473.dgn PLOT DATE: 6/9/2011 PLOT TIME: 9:08:18 AM

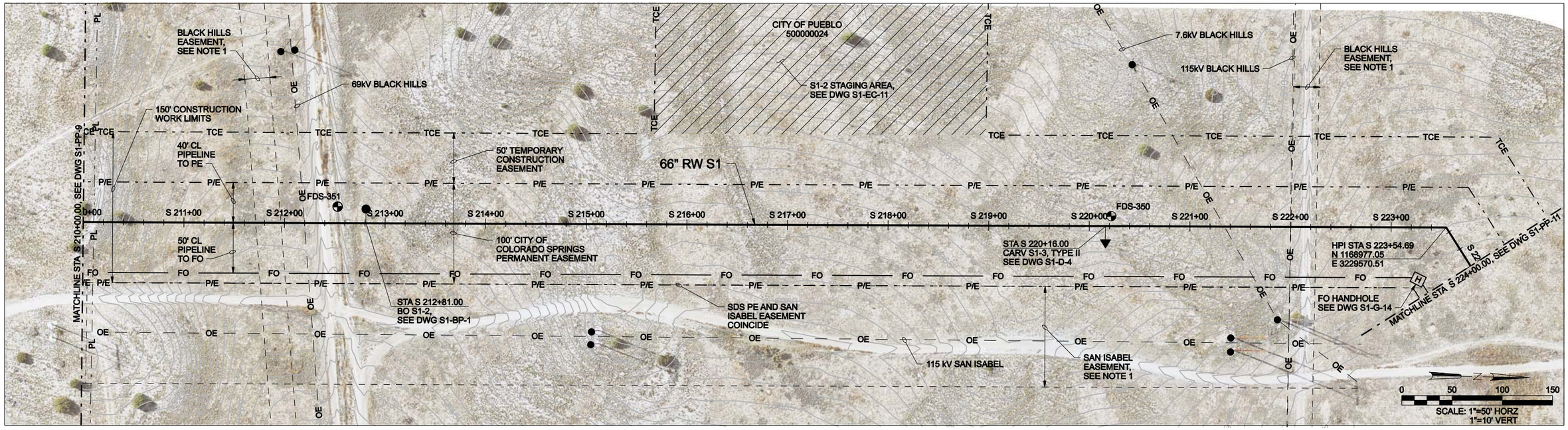

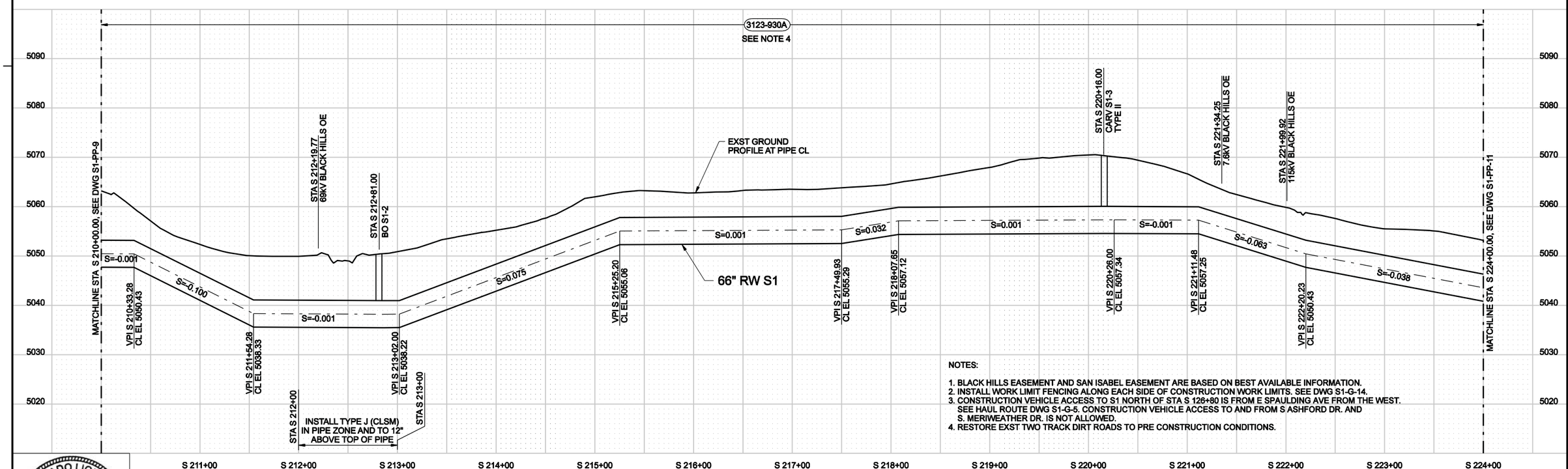

NOTES:

1. BLACK HILLS EASEMENT AND SAN ISABEL EASEMENT ARE BASED ON BEST AVAILABLE INFORMATION.
2. INSTALL WORK LIMIT FENCING ALONG EACH SIDE OF CONSTRUCTION WORK LIMITS. SEE DWG S1-G-14.
3. CONSTRUCTION VEHICLE ACCESS TO S1 NORTH OF STA S 126+80 IS FROM E SPAULDING AVE FROM THE WEST. SEE HAUL ROUTE DWG S1-G-5. CONSTRUCTION VEHICLE ACCESS TO AND FROM S ASHFORD DR. AND S. MERIWEATHER DR. IS NOT ALLOWED.
4. RESTORE EXST TWO TRACK DIRT ROADS TO PRE CONSTRUCTION CONDITIONS.

COLORADO LICENSED
RODY L. HENRY
39310
6/30/11
PROFESSIONAL ENGINEER

DSGN	E FORD
DR	B NORVILLE
CHK	G SIMPSON
APVD	J HENRY

NO.	DATE	REVISION	BY	APVD

VERIFY SCALE
BAR IS ONE INCH ON ORIGINAL DRAWING.
0 1"
IF NOT ONE INCH ON THIS SHEET, ADJUST SCALES ACCORDINGLY.

CH2MHILL
Colorado Springs, CO 80903

SOUTHERN DELIVERY SYSTEM
RAW WATER PIPELINE
SOUTH SECTION ONE

PLAN AND PROFILE

STATION S 210+00 TO STATION S 224+00

SHEET	24
DWG	S1-PP-10
DATE	JULY 2011
PROJ	171473.20.SP

Colorado Springs Utilities Project Number: SDS-002 CSU Work Order Number: 1146977

FILENAME: SP105nP10d_171473.dgn PLOT DATE: 6/10/2011 PLOT TIME: 10:58:54 AM

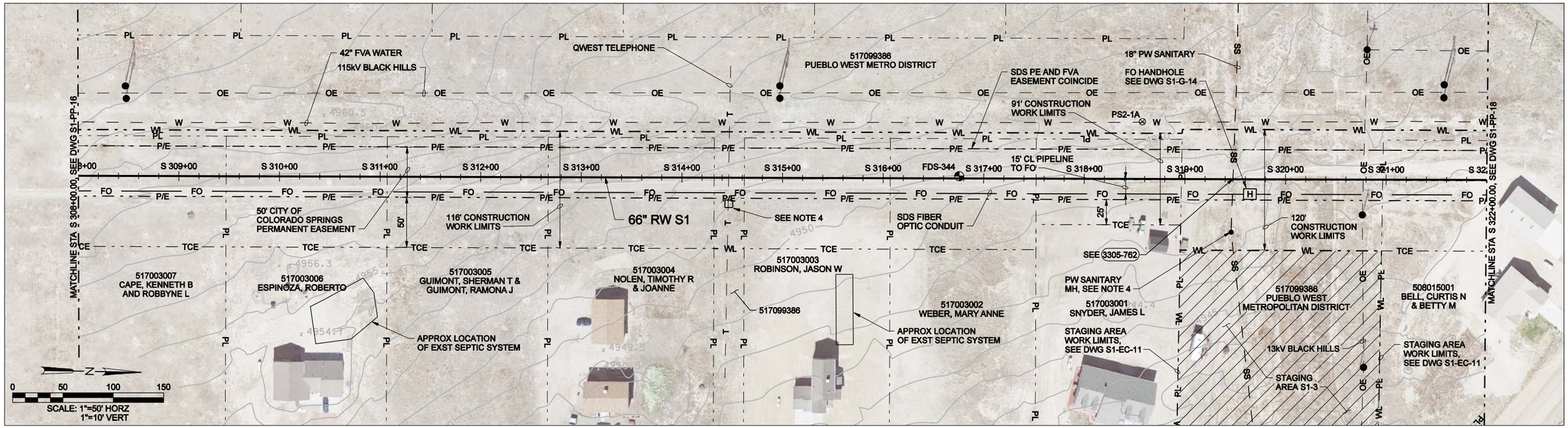

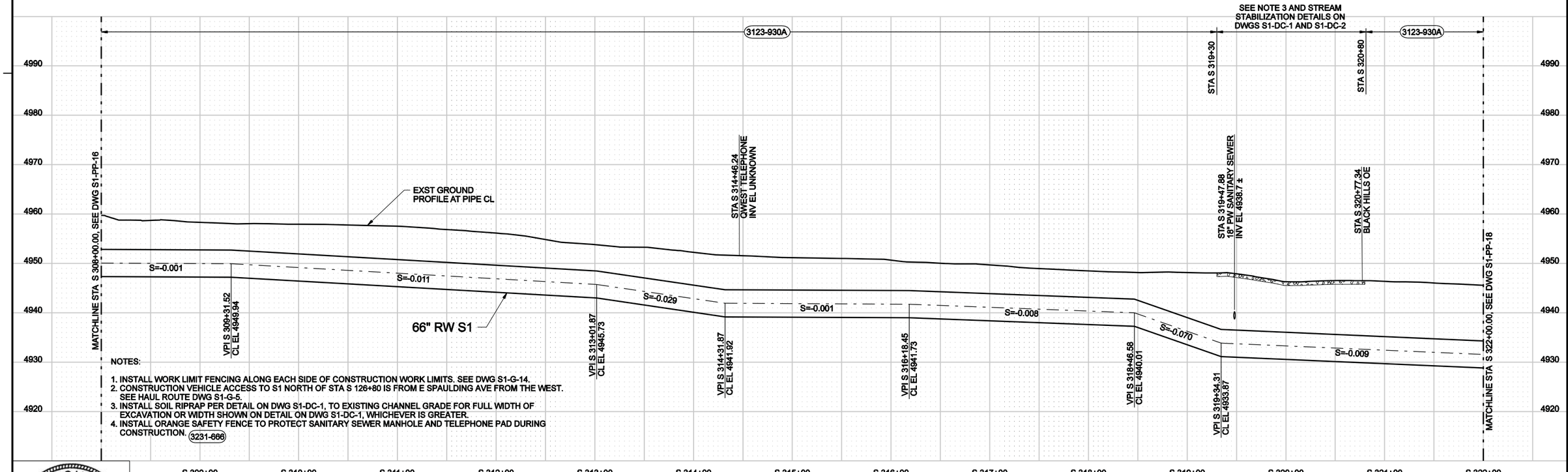

NOTES:

1. INSTALL WORK LIMIT FENCING ALONG EACH SIDE OF CONSTRUCTION WORK LIMITS. SEE DWG S1-G-14.
2. CONSTRUCTION VEHICLE ACCESS TO S1 NORTH OF STA S 126+80 IS FROM E SPAULDING AVE FROM THE WEST. SEE HAUL ROUTE DWG S1-G-5.
3. INSTALL SOIL RIPRAP PER DETAIL ON DWG S1-DC-1, TO EXISTING CHANNEL GRADE FOR FULL WIDTH OF EXCAVATION OR WIDTH SHOWN ON DETAIL ON DWG S1-DC-1, WHICHEVER IS GREATER.
4. INSTALL ORANGE SAFETY FENCE TO PROTECT SANITARY SEWER MANHOLE AND TELEPHONE PAD DURING CONSTRUCTION. 3231-666

COLORADO LICENSED
CODY L. HENRY
39310
6/30/11
PROFESSIONAL ENGINEER

DSGN	E FORD				
DR	B NORVILLE				
CHK	G SIMPSON				
APVD	J HENRY	NO.	DATE	REVISION	BY	APVD

VERIFY SCALE
BAR IS ONE INCH ON ORIGINAL DRAWING.
0 1"
IF NOT ONE INCH ON THIS SHEET, ADJUST SCALES ACCORDINGLY.

CH2MHILL
Colorado Springs, CO 80903

SOUTHERN DELIVERY SYSTEM
RAW WATER PIPELINE
SOUTH SECTION ONE

PLAN AND PROFILE

STATION S 308+00 TO STATION S 322+00

SHEET	31
DWG	S1-PP-17
DATE	JULY 2011
PROJ	171473.20.SP

Colorado Springs Utilities Project Number: SDS-002 CSU Work Order Number: 1146977

FILENAME: SP105nP17d_171473.dgn PLOT DATE: 6/29/2011 PLOT TIME: 8:37:38 AM

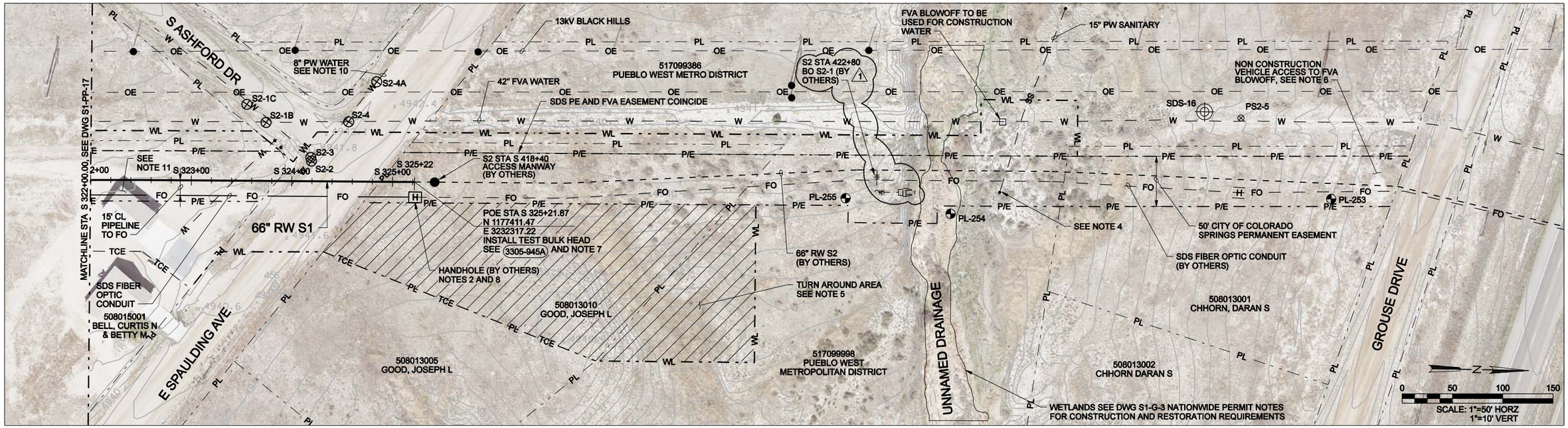

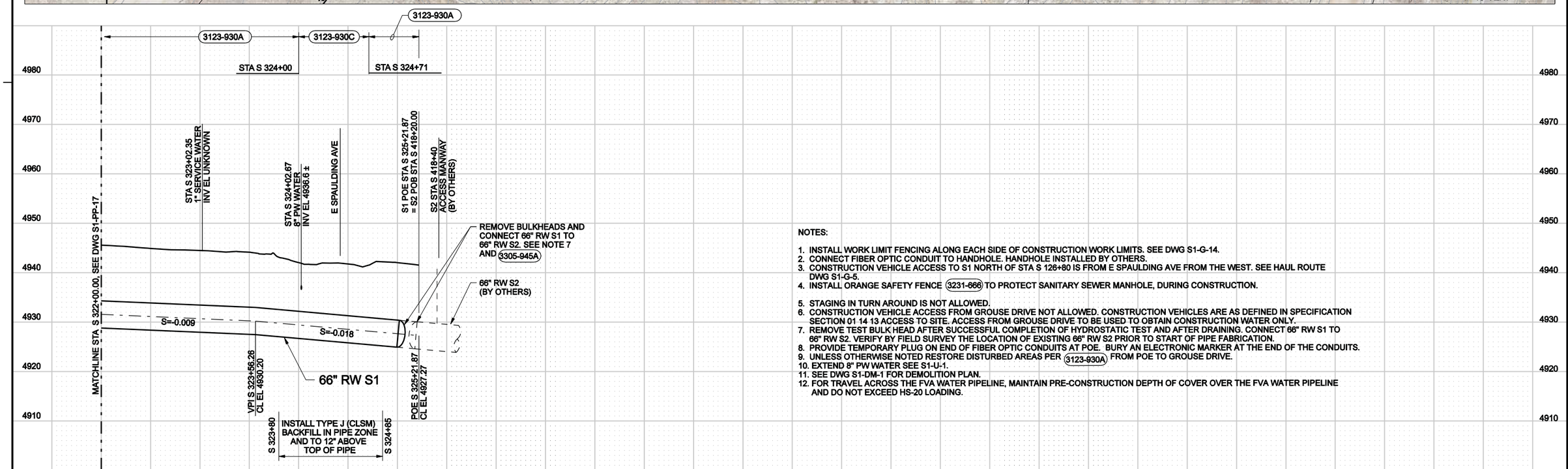

NOTES:

1. INSTALL WORK LIMIT FENCING ALONG EACH SIDE OF CONSTRUCTION WORK LIMITS. SEE DWG S1-G-14.
2. CONNECT FIBER OPTIC CONDUIT TO HANDHOLE. HANDHOLE INSTALLED BY OTHERS.
3. CONSTRUCTION VEHICLE ACCESS TO S1 NORTH OF STA S 126+80 IS FROM E SPAULDING AVE FROM THE WEST. SEE HAUL ROUTE DWG S1-G-5.
4. INSTALL ORANGE SAFETY FENCE 3231-666 TO PROTECT SANITARY SEWER MANHOLE, DURING CONSTRUCTION.
5. STAGING IN TURN AROUND IS NOT ALLOWED.
6. CONSTRUCTION VEHICLE ACCESS FROM GROUSE DRIVE NOT ALLOWED. CONSTRUCTION VEHICLES ARE AS DEFINED IN SPECIFICATION SECTION 01 14 13 ACCESS TO SITE. ACCESS FROM GROUSE DRIVE TO BE USED TO OBTAIN CONSTRUCTION WATER ONLY.
7. REMOVE TEST BULKHEAD AFTER SUCCESSFUL COMPLETION OF HYDROSTATIC TEST AND AFTER DRAINING. CONNECT 66" RW S1 TO 66" RW S2. VERIFY BY FIELD SURVEY THE LOCATION OF EXISTING 66" RW S2 PRIOR TO START OF PIPE FABRICATION.
8. PROVIDE TEMPORARY PLUG ON END OF FIBER OPTIC CONDUITS AT POE. BURY AN ELECTRONIC MARKER AT THE END OF THE CONDUITS.
9. UNLESS OTHERWISE NOTED RESTORE DISTURBED AREAS PER 3123-930A FROM POE TO GROUSE DRIVE.
10. EXTEND 8" PW WATER SEE S1-U-1.
11. SEE DWG S1-DM-1 FOR DEMOLITION PLAN.
12. FOR TRAVEL ACROSS THE FVA WATER PIPELINE, MAINTAIN PRE-CONSTRUCTION DEPTH OF COVER OVER THE FVA WATER PIPELINE AND DO NOT EXCEED HS-20 LOADING.

COLORADO LICENSED
JODY L. HENRY
39310
PROFESSIONAL ENGINEER

DSGN	E FORD					
DR	B NORVILLE					
CHK	G SIMPSON	1	7/13/11	ADDENDUM NO. 1	BN	JH
APVD	J HENRY	NO.	DATE	REVISION	BY	APVD

VERIFY SCALE
BAR IS ONE INCH ON ORIGINAL DRAWING.
0 1"
IF NOT ONE INCH ON THIS SHEET, ADJUST SCALES ACCORDINGLY.

CH2MHILL
Colorado Springs, CO 80903

SOUTHERN DELIVERY SYSTEM
RAW WATER PIPELINE
SOUTH SECTION ONE

PLAN AND PROFILE
STATION S 322+00 TO POE STATION S 325+21.87

SHEET	32
DWG	S1-PP-18
DATE	JULY 2011
PROJ	171473.20.SP

Colorado Springs Utilities Project Number: SDS-002 CSU Work Order Number: 1146977

FILENAME: SP105nP18d_171473.dgn PLOT DATE: 7/20/2011 PLOT TIME: 7:33:44 AM

SEDIMENT AND EROSION CONTROL GENERAL NOTES

1. A STORMWATER MANAGEMENT PLAN (SWMP) HAS BEEN PREPARED BY UTILITIES FOR USE BY THE CONTRACTOR. THE SWMP HAS BEEN PREPARED IN ACCORDANCE WITH PUEBLO COUNTY, PUEBLO WEST METRO DISTRICT AND COLORADO DEPARTMENT OF PUBLIC HEALTH AND ENVIRONMENT CRITERIA. USE AS REQUIRED TO OBTAIN PERMITS IDENTIFIED IN THE SPECIFICATIONS. OBTAIN AND RETAIN A COPY OF THE SWMP ON SITE.
2. PLACE EROSION AND SEDIMENT CONTROL BMPS AND PROVIDE MAINTENANCE AND RECORD KEEPING IN ACCORDANCE WITH FEDERAL, STATE, AND COUNTY STANDARDS.
3. INSTALL WORK LIMIT FENCING DEFINING THE LIMITS OF CONSTRUCTION PRIOR TO OTHER CONSTRUCTION ACTIVITIES, INCLUDING CONSTRUCTION LIMITS ADJACENT TO STREAM CORRIDORS AND OTHER AREAS TO BE PRESERVED.
4. INSTALL EROSION AND SEDIMENT CONTROL BMPS, WHERE POSSIBLE, BEFORE THE START OF CONSTRUCTION.
5. INSTALL APPROVED BMPS AROUND STOCKPILED MATERIALS PER THE SPECIFICATIONS.
6. INSTALL APPROVED BMPS AROUND STAGING AREAS AND MAINTENANCE AREAS. PROTECT AND MAINTAIN AREAS PER FEDERAL, STATE, AND COUNTY STANDARDS.
7. STORE AND PROTECT HAZARDOUS MATERIAL PER REQUIREMENTS OF PROJECT PERMITS AND PER FEDERAL, STATE AND COUNTY OR OTHER APPLICABLE REQUIREMENTS
8. ADHERE TO THE APPROVED LIMITS OF CONSTRUCTION. OBTAIN APPROVAL FROM CONSTRUCTION MANAGER PRIOR TO MAKING CHANGES TO THE WORK LIMITS. ADDITIONAL EROSION/SEDIMENT CONTROLS MAY BE REQUIRED.
9. RETAIN AND PROTECT NATURAL VEGETATION WHEREVER POSSIBLE. LIMIT EXPOSURE OF SOIL TO EROSION BY REMOVAL OR DISTURBANCE OF VEGETATION TO THE AREA REQUIRED FOR IMMEDIATE CONSTRUCTION OPERATIONS.
10. CONSTRUCTION VEHICLE TRAFFIC MUST ENTER/EXIT THE SITE THROUGH THE APPROVED ACCESS POINTS. VEHICLE TRACKING CONTROLS ARE REQUIRED AT ACCESS POINTS ON THE SITE. ADDITIONAL VEHICLE TRACKING CONTROLS TO BE ADDED AS REQUIRED BY PUEBLO COUNTY. INSTALL AND MAINTAIN VEHICLE TRACKING CONTROLS PER PUEBLO COUNTY.
11 KEEP PAVED AREAS CLEAN INCLUDING STREETS THROUGHOUT CONSTRUCTION. CLEAN WITH A STREET SWEEPER OR SIMILAR DEVICE. AT FIRST NOTICE OF DIRT TRACKED ON PAVED AREAS, STREET WASHING IS NOT ALLOWED. THE CONSTRUCTION MANAGER RESERVES THE RIGHT TO REQUIRE ADDITIONAL MEASURES TO ENSURE AREA STREETS ARE KEPT FREE OF SEDIMENT AND/OR CONSTRUCTION DEBRIS.
12. THE EROSION CONTROL PLANS MAY REQUIRE CHANGES OR ALTERATIONS TO MEET CHANGING SITE OR PROJECT CONDITIONS, TO ADDRESS INEFFICIENCIES IN DESIGN OR INSTALLATION, OR TO MEET PERMIT REQUIREMENTS.
13. PROVIDE LINING OF TEMPORARY SWALES AND DITCHES. NO PERMANENT EARTH SLOPES GREATER THAN 3:1 ALLOWED, EXCEPT WHERE SHOWN ON DRAWINGS.
14. REMEDIATE SEDIMENT OR SOIL ACCUMULATIONS CREATED DUE TO CONSTRUCTION ACTIVITIES BEYOND THE LIMITS OF CONSTRUCTION IMMEDIATELY.
15. PROVIDE A WATER SOURCE ON SITE DURING CONSTRUCTION ACTIVITIES AND UTILIZE AS REQUIRED TO MINIMIZE DUST FROM EQUIPMENT AND WIND IN ACCORDANCE WITH THE SPECIFICATIONS.
16. SEED AND MULCH SOILS THAT WILL BE STOCKPILED FOR MORE THAN FOURTEEN (14) DAYS. DO NOT PLACE STOCKPILES WITHIN ONE HUNDRED (100) FEET OF THE TOP OF BANK OF ANY WATERWAY OR DRAINAGE.
17. CHEMICAL OR HAZARDOUS MATERIAL SPILLS THAT MAY ENTER WATERS OF THE STATE OF COLORADO, THAT INCLUDE BUT ARE NOT LIMITED TO, SURFACE WATER, GROUNDWATER AND DRY GULLIES OR STORM SEWERS, LEADING TO THE RELEASES OF PETROLEUM PRODUCTS AND CERTAIN HAZARDOUS SUBSTANCES LISTED UNDER THE FEDERAL CLEAN WATER ACT (40 CFR PART 116) MUST BE REPORTED TO THE NATIONAL RESPONSE CENTER AS WELL AS THE CDPHE. REPORT SPILLS THAT POSE AN IMMEDIATE RISK TO HUMAN LIFE TO 911.
18. THE USE OF REBAR, STEEL STAKES, OR STEEL FENCE POSTS FOR STAKING OR SUPPORT OF BMPS IS PROHIBITED.
19. INSTALL CONCRETE WASHOUT LOCATIONS AS NEEDED WITHIN THE WORK LIMITS. THE DISCHARGE OF WATER CONTAINING WASTE CONCRETE IS PROHIBITED WITHIN 500 FEET OF ANY WATERWAY. PROPERLY CLEAN UP AND DISPOSE OF CONCRETE WASTE AT AN APPROPRIATE LOCATION.
20. STABILIZE DISTURBED AREAS INCLUDING ROADS, WITHIN 14 DAYS OF SUBSTANTIAL COMPLETION OF GRADING, INCLUDING AREAS TO REMAIN DORMANT FOR LONGER THAN 30 DAYS, WHICHEVER IS LESS. THIS MAY REQUIRE MULTIPLE MOBILIZATIONS FOR SEEDING AND MULCHING.
21. TRASH RECEPTACLES AND PORTABLE TOILETS ARE PROHIBITED WITHIN 500 FEET OF ANY WATERWAY OR DRAINAGE.
22. CONDUCT VEHICLE MAINTENANCE, CLEANING, AND FUELING OFF-SITE, IF POSSIBLE. IF CONDUCTED ONSITE, THESE OPERATIONS MUST BE APPROVED BY CONSTRUCTION MANAGER, AND CONDUCTED ON A LEVEL GROUND SURFACE IN A DESIGNATED AREA WITH APPROVED PERIMETER CONTROLS.
23. STORE HAZARDOUS MATERIALS AND CHEMICALS ONSITE ONLY IN THE STAGING AREA AND ONLY IN AN APPROVED, COVERED TEMPORARY STRUCTURE. OBTAIN ANY REQUIRED PERMITS OR APPROVALS.
24. INSPECT BMPS A MINIMUM OF EVERY 14 DAYS AND IMMEDIATELY AFTER STORM EVENTS. CORRECT ANY DAMAGE OR DEFICIENCIES DISCOVERED DURING THE INSPECTION IN ACCORDANCE WITH PERMIT REQUIREMENTS, SPECIFICATIONS, AND PUEBLO COUNTY.
25. REMOVE SEDIMENTS WHEN SEDIMENTS HAVE ACCUMULATED TO 1/2 THE HEIGHT OF THE BMP.

EROSION CONTROL LEGEND

- STRAW BALES
- ROCK SOCKS
- ROCK CHECK DAMS
- SILT FENCE
- CONCRETE WASHOUT

CONSTRUCTION ENTRANCE

- PAVED
- GRAVEL
- DIRECTION OF DRAINAGE FLOW

COLORADO LICENSED PROFESSIONAL ENGINEER GODY L. HENRY 39310 6/30/11

DSGN	E FORD					
DR	B NORVILLE					
CHK	G SIMPSON					
APVD	J HENRY	NO.	DATE	REVISION	BY	APVD

VERIFY SCALE
BAR IS ONE INCH ON ORIGINAL DRAWING.
0 1"
IF NOT ONE INCH ON THIS SHEET, ADJUST SCALES ACCORDINGLY.

CH2MHILL
Colorado Springs, CO 80903

SOUTHERN DELIVERY SYSTEM
RAW WATER PIPELINE
SOUTH SECTION ONE

EROSION CONTROL AND EASEMENT PLANS

EROSION CONTROL NOTES

SHEET	49
DWG	S1-EC-1
DATE	JULY 2011
PROJ	171473.20.SP

Colorado Springs Utilities Project Number: SDS-002 CSU Work Order Number: 1146977

FILENAME: SP105nEC01d_171473.dgn PLOT DATE: 6/29/2011 PLOT TIME: 8:21:39 AM

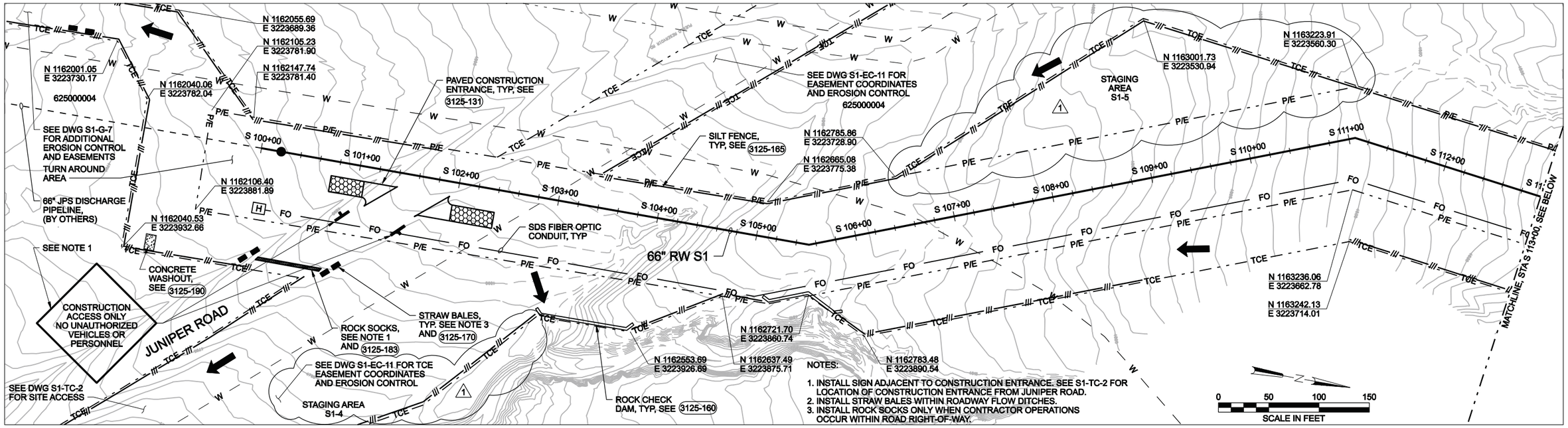

EROSION CONTROL PLAN, SEE S1-PP-1

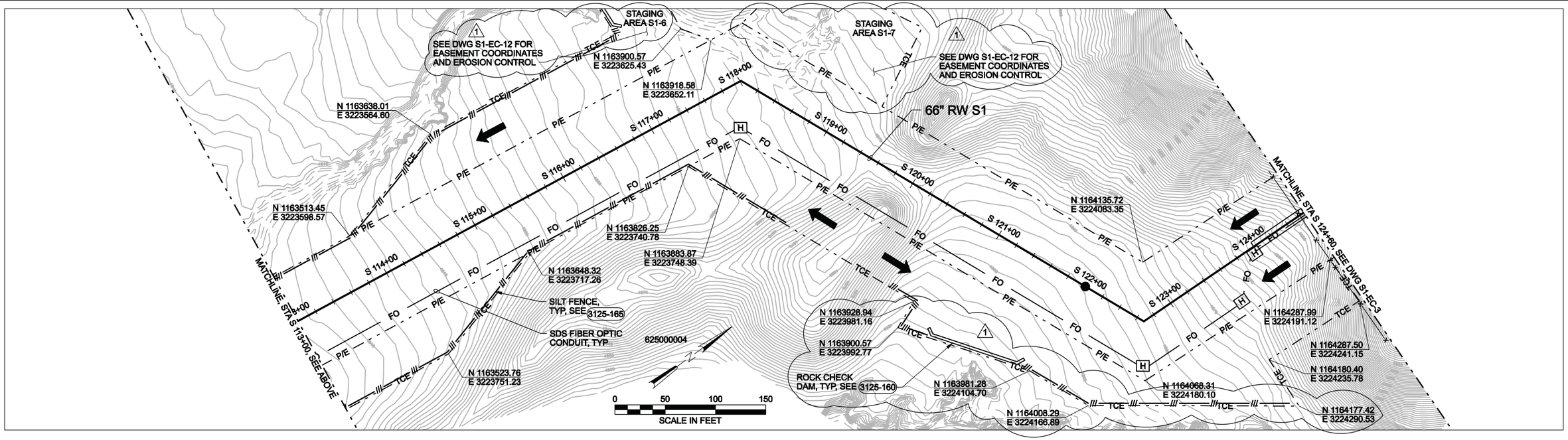

EROSION CONTROL PLAN, SEE S1-PP-2

COLORADO LICENSED
JODY L. HENRY
39310
PROFESSIONAL ENGINEER

DSGN	E FORD
DR	B NORVILLE
CHK	G SIMPSON
APVD	J HENRY

NO.	DATE	REVISION	BY	APVD
1	7/13/11	ADDENDUM NO. 1 - TCE ADDED	BN	JH

VERIFY SCALE
BAR IS ONE INCH ON ORIGINAL DRAWING.
0 1"
IF NOT ONE INCH ON THIS SHEET, ADJUST SCALES ACCORDINGLY.

CH2MHILL
Colorado Springs, CO 80903

SOUTHERN DELIVERY SYSTEM
RAW WATER PIPELINE
SOUTH SECTION ONE

EROSION CONTROL AND EASEMENT PLANS

STATION S 100+00 TO STATION S 124+60

SHEET	50
DWG	S1-EC-2
DATE	JULY 2011
PROJ	171473.20.SP

Colorado Springs Utilities Project Number: SDS-002 CSU Work Order Number: 1146977

FILENAME: SP105nEC02d_171473.dgn PLOT DATE: 7/13/2011 PLOT TIME: 11:30:57 AM

NOTES:

1. INSTALL WORK LIMIT FENCING TO ENCLOSE WORK AREA AS NEEDED WITHIN THE PE AND TCE, AND OUTSIDE OF UPRR EASEMENT.

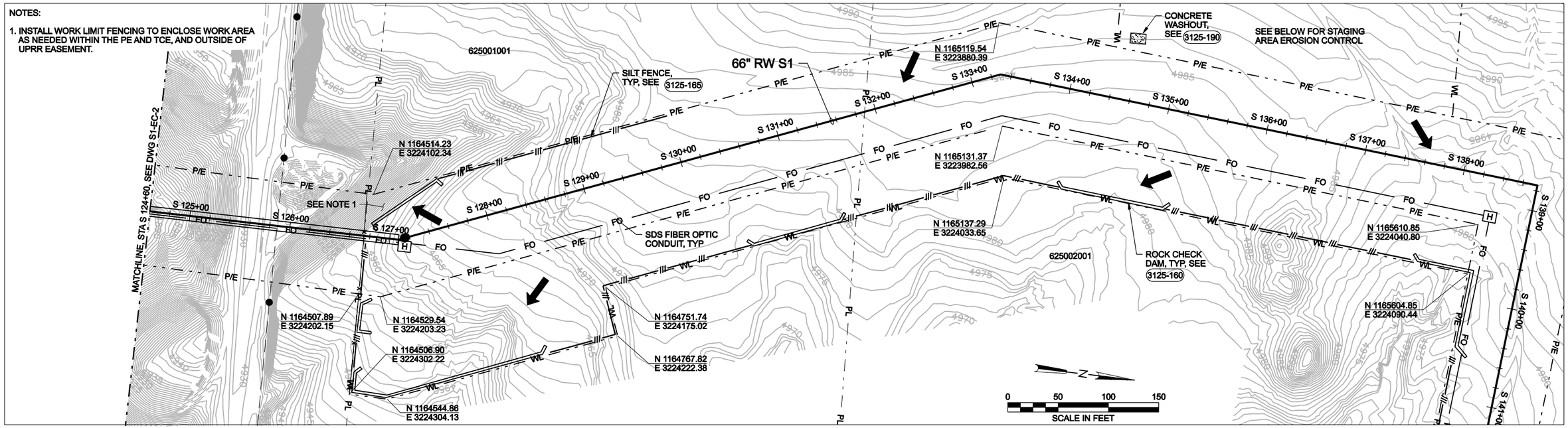

EROSION CONTROL PLAN, SEE S1-PP-3 AND S1-PP-4

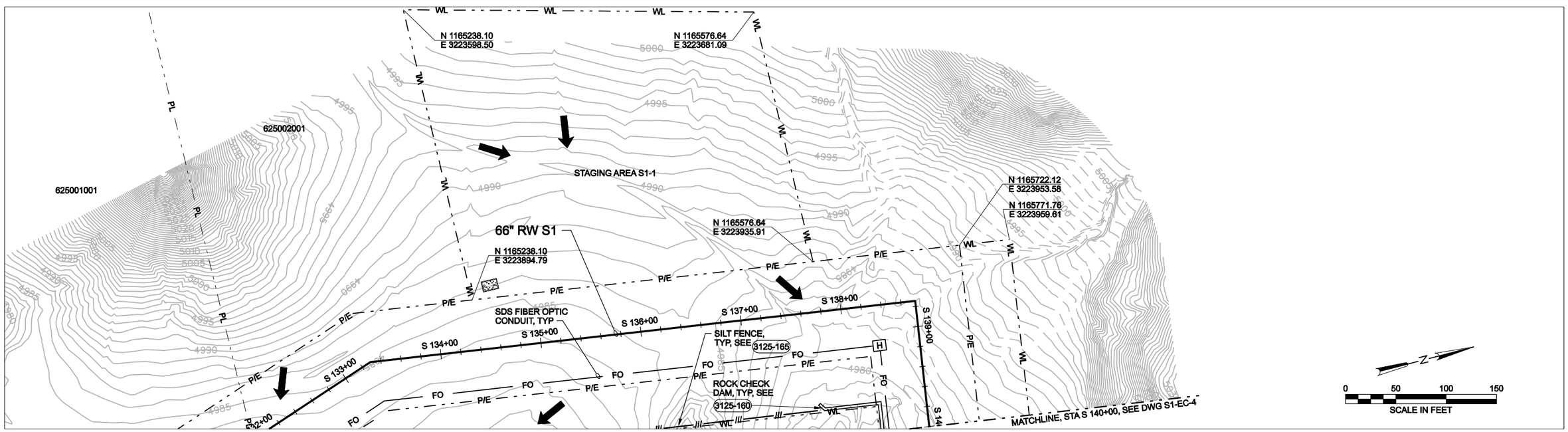

EROSION CONTROL PLAN, SEE S1-PP-4

COLORADO LICENSED PROFESSIONAL ENGINEER GLORY L. HENRY 39310 6/30/11

DSGN	E FORD					
DR	B NORVILLE					
CHK	G SIMPSON					
APVD	J HENRY	NO.	DATE	REVISION	BY	APVD

VERIFY SCALE
BAR IS ONE INCH ON ORIGINAL DRAWING.
0 1"
IF NOT ONE INCH ON THIS SHEET, ADJUST SCALES ACCORDINGLY.

CH2MHILL
Colorado Springs, CO 80903

SOUTHERN DELIVERY SYSTEM
RAW WATER PIPELINE
SOUTH SECTION ONE

EROSION CONTROL AND EASEMENT PLANS

STATION S 124+60 TO STATION S 140+00

SHEET	51
DWG	S1-EC-3
DATE	JULY 2011
PROJ	171473.20.SP

Colorado Springs Utilities Project Number: SDS-002 CSU Work Order Number: 1146977

FILENAME: SP105nEC03d_171473.dgn PLOT DATE: 6/29/2011 PLOT TIME: 9:22:02 AM

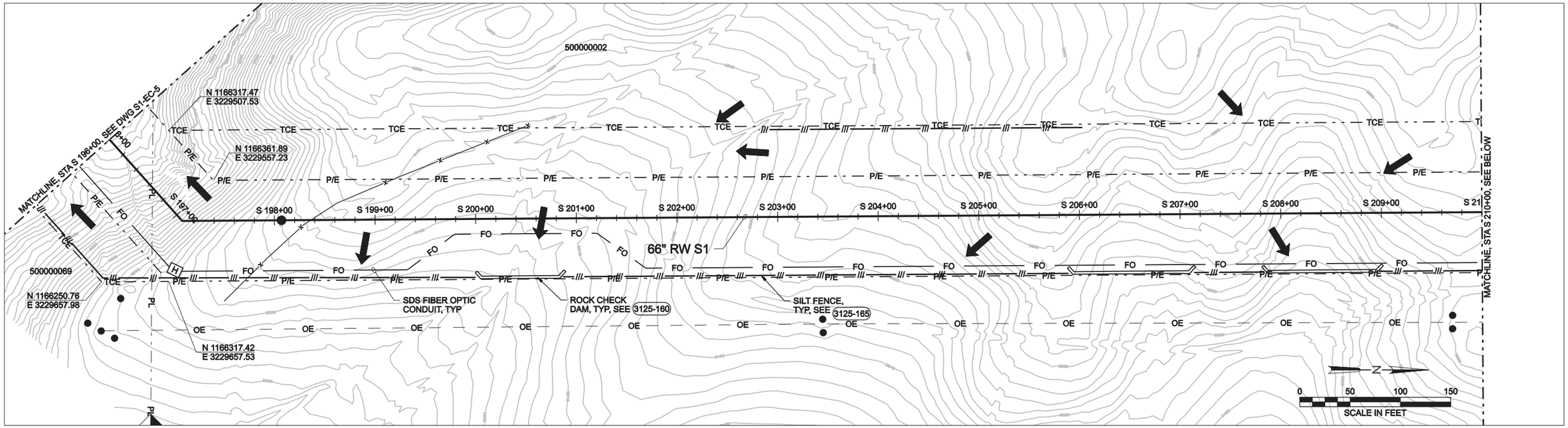

EROSION CONTROL PLAN, SEE S1-PP-9

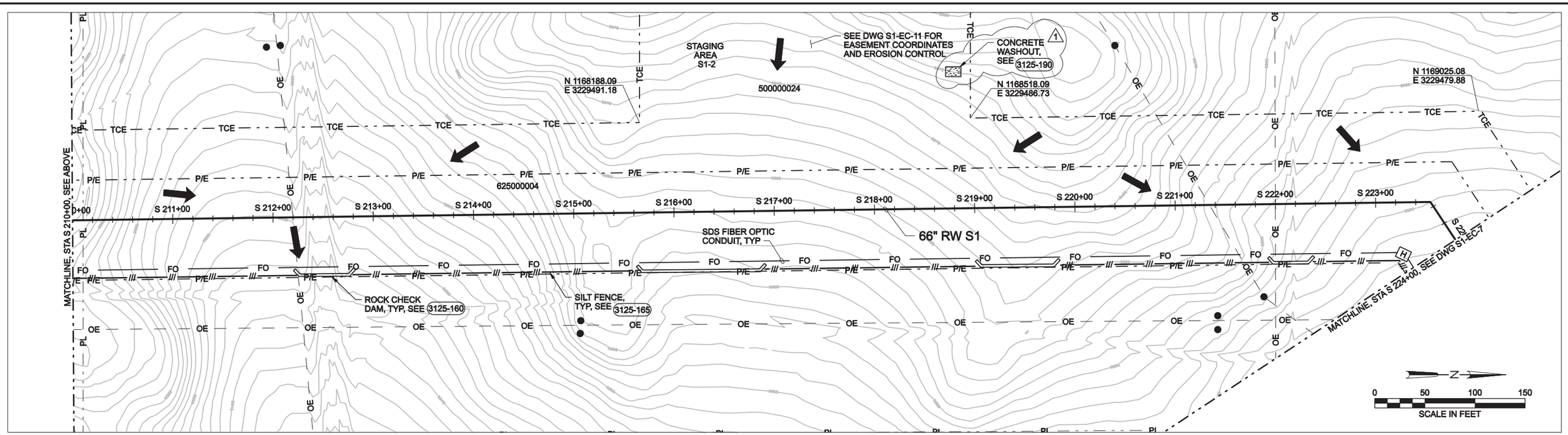

EROSION CONTROL PLAN, SEE S1-PP-10

COLORADO LICENSED
JODY L. HENRY
39310
PROFESSIONAL ENGINEER

DSGN	E FORD					
DR	B NORVILLE					
CHK	G SIMPSON	1	7/13/11	ADDENDUM NO. 1	JH	BN
APVD	J HENRY	NO.	DATE	REVISION	BY	APVD

VERIFY SCALE
BAR IS ONE INCH ON ORIGINAL DRAWING.
0 1"
IF NOT ONE INCH ON THIS SHEET, ADJUST SCALES ACCORDINGLY.

CH2MHILL
Colorado Springs, CO 80903

SOUTHERN DELIVERY SYSTEM
RAW WATER PIPELINE
SOUTH SECTION ONE

EROSION CONTROL AND EASEMENT PLANS

STATION S 196+00 TO STATION S 224+00

SHEET	54
DWG	S1-EC-6
DATE	JULY 2011
PROJ	171473.20.SP

Colorado Springs Utilities Project Number: SDS-002 CSU Work Order Number: 1146977

FILENAME: SP105nEC06d_171473.dgn PLOT DATE: 8/4/2011 PLOT TIME: 3:40:13 PM

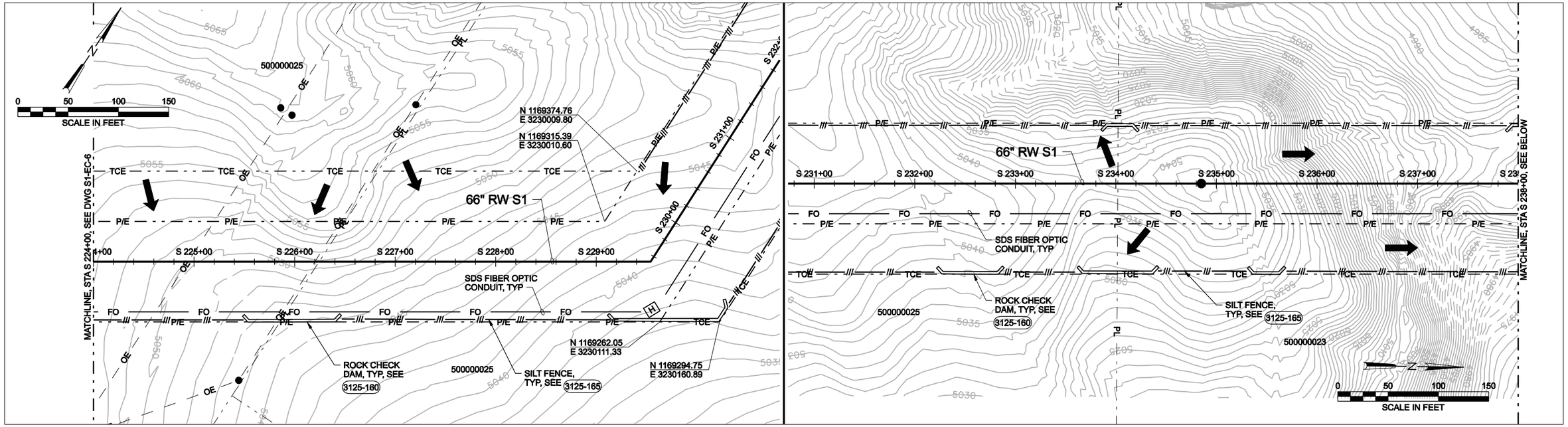

EROSION CONTROL PLAN, SEE S1-PP-11

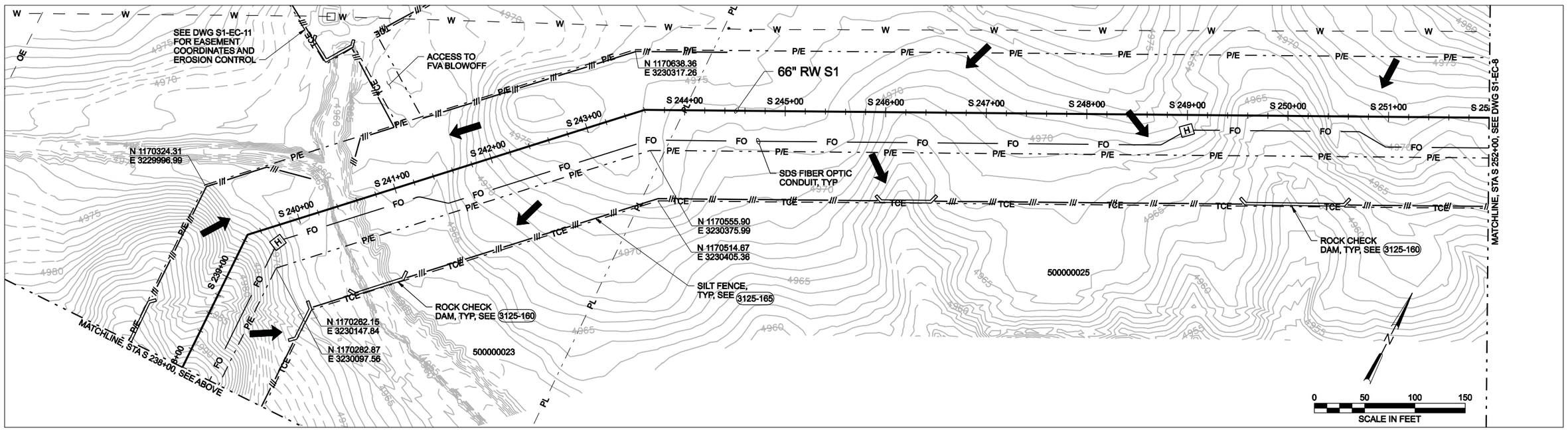

EROSION CONTROL PLAN, SEE S1-PP-12

COLORADO LICENSED PROFESSIONAL ENGINEER GARY L. HENRY 39310 6/30/11

DSGN	E FORD					
DR	B NORVILLE					
CHK	G SIMPSON					
APVD	J HENRY	NO.	DATE	REVISION	BY	APVD

VERIFY SCALE
BAR IS ONE INCH ON ORIGINAL DRAWING.
0 1"
IF NOT ONE INCH ON THIS SHEET, ADJUST SCALES ACCORDINGLY.

CH2MHILL
Colorado Springs, CO 80903

SOUTHERN DELIVERY SYSTEM
RAW WATER PIPELINE
SOUTH SECTION ONE

EROSION CONTROL AND EASEMENT PLANS

STATION S 224+00 TO STATION S 252+00

SHEET	55
DWG	S1-EC-7
DATE	JULY 2011
PROJ	171473.20.SP

Colorado Springs Utilities Project Number: SDS-002 CSU Work Order Number: 1146977

FILENAME: SP105nEC07d_171473.dgn PLOT DATE: 6/29/2011 PLOT TIME: 9:42:35 AM

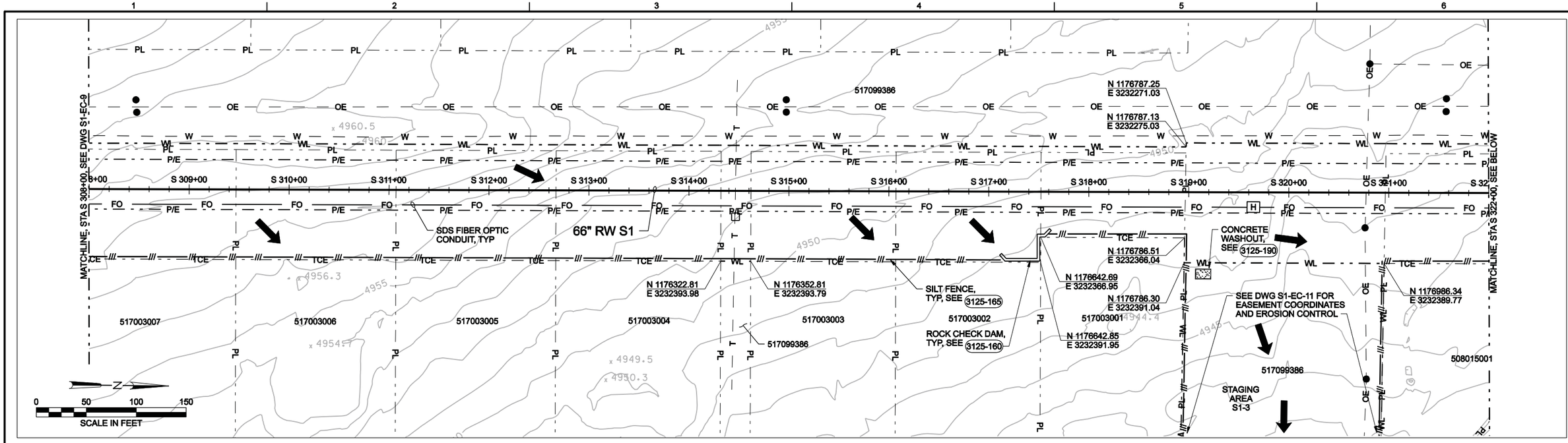

EROSION CONTROL PLAN, SEE S1-PP-17

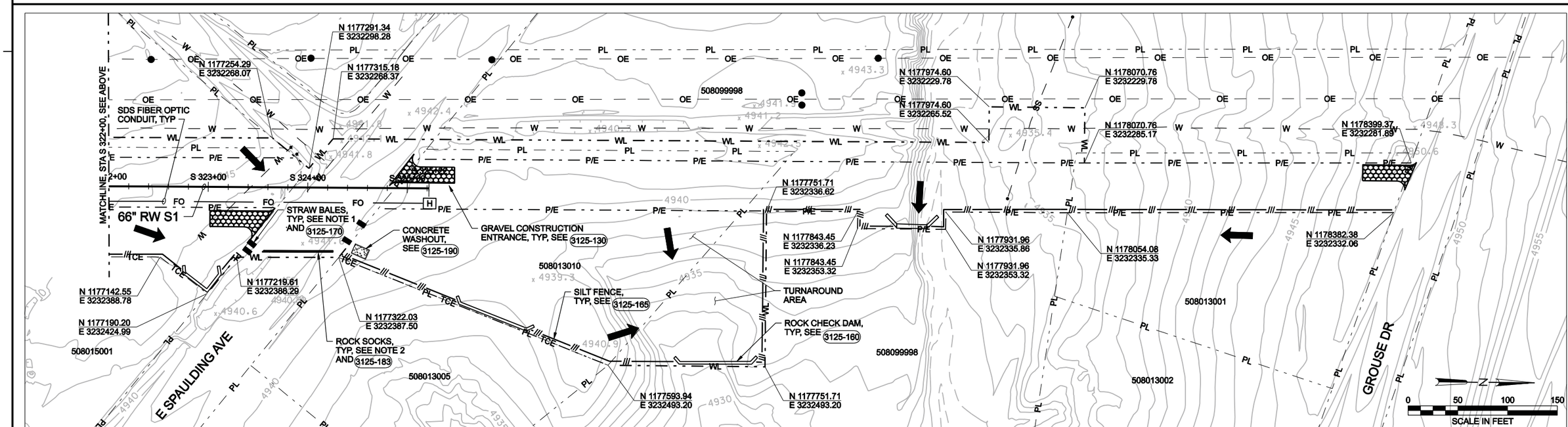

EROSION CONTROL PLAN, SEE S1-PP-18

NOTES:

1. INSTALL STRAW BALES WITHIN ROADWAY FLOW DITCHES.
2. INSTALL ROCK SOCKS ONLY WHEN CONTRACTOR OPERATIONS OCCUR WITHIN ROAD RIGHT-OF-WAY.

COLORADO LICENSED PROFESSIONAL ENGINEER — GARY L. HENRY — 39310 — 6/30/11

DSGN	E FORD					
DR	B NORVILLE					
CHK	G SIMPSON					
APVD	J HENRY	NO.	DATE	REVISION	BY	APVD

VERIFY SCALE
BAR IS ONE INCH ON ORIGINAL DRAWING.
0 1"
IF NOT ONE INCH ON THIS SHEET, ADJUST SCALES ACCORDINGLY.

CH2MHILL
Colorado Springs, CO 80903

SOUTHERN DELIVERY SYSTEM
RAW WATER PIPELINE
SOUTH SECTION ONE

EROSION CONTROL AND EASEMENT PLANS

STATION S 308+00 TO POE STATION S 325+21.87

SHEET	58
DWG	S1-EC-10
DATE	JULY 2011
PROJ	171473.20.SP

Colorado Springs Utilities Project Number: SDS-002 CSU Work Order Number: 1146977

FILENAME: SP105nEC10d_171473.dgn PLOT DATE: 6/29/2011 PLOT TIME: 10:01:07 AM

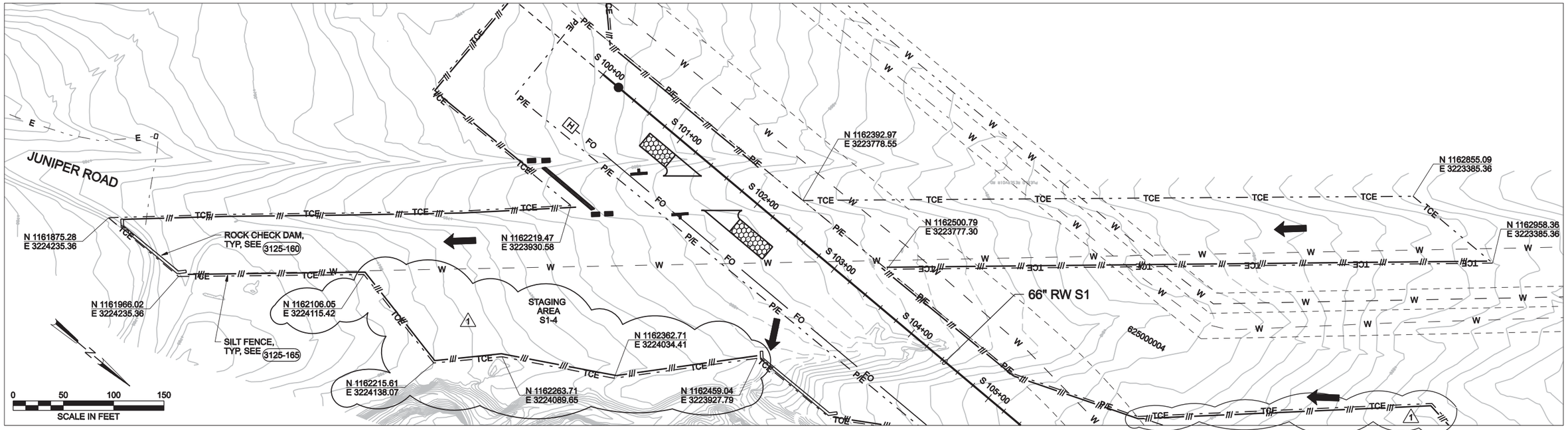

PARTIAL EASEMENT PLAN, SEE S1-PP-1

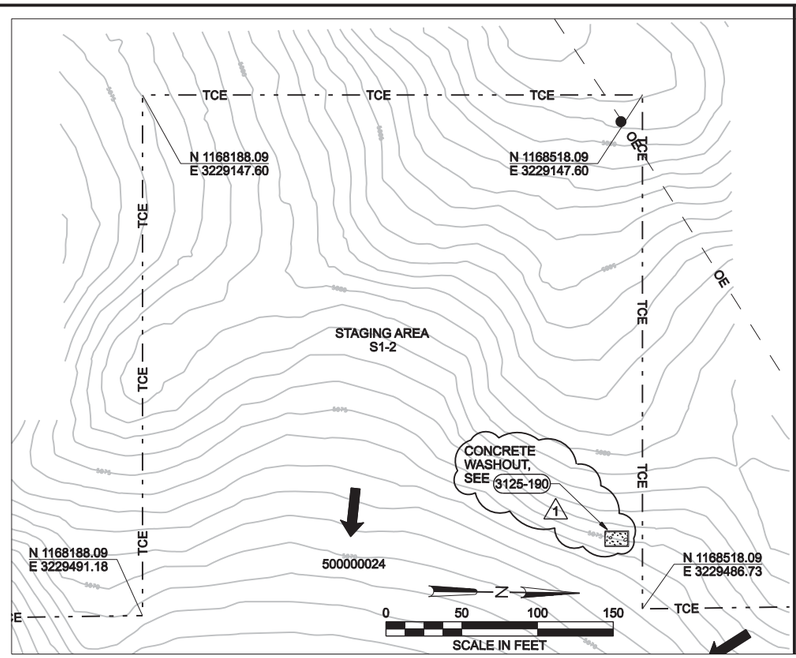

PARTIAL EASEMENT PLAN, SEE S1-PP-10

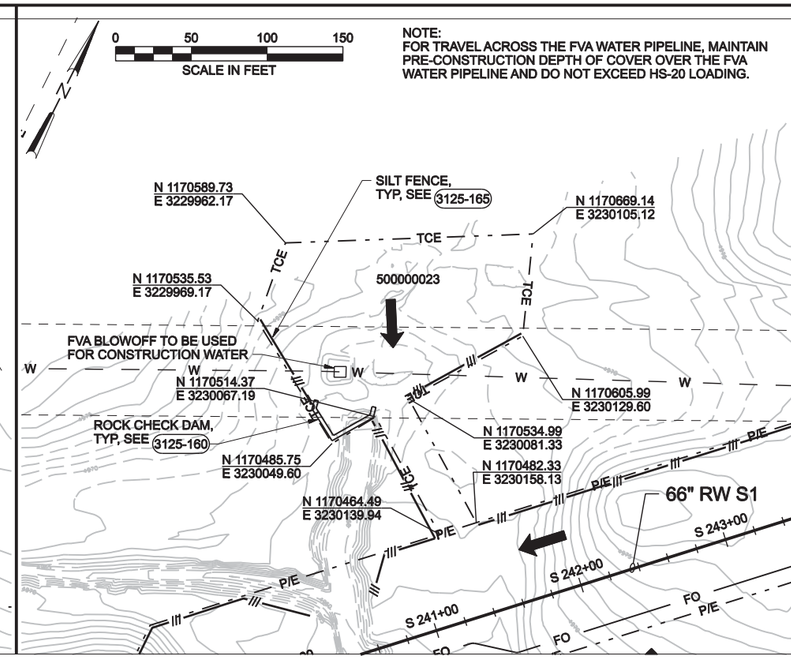

PARTIAL EASEMENT PLAN, SEE S1-PP-12

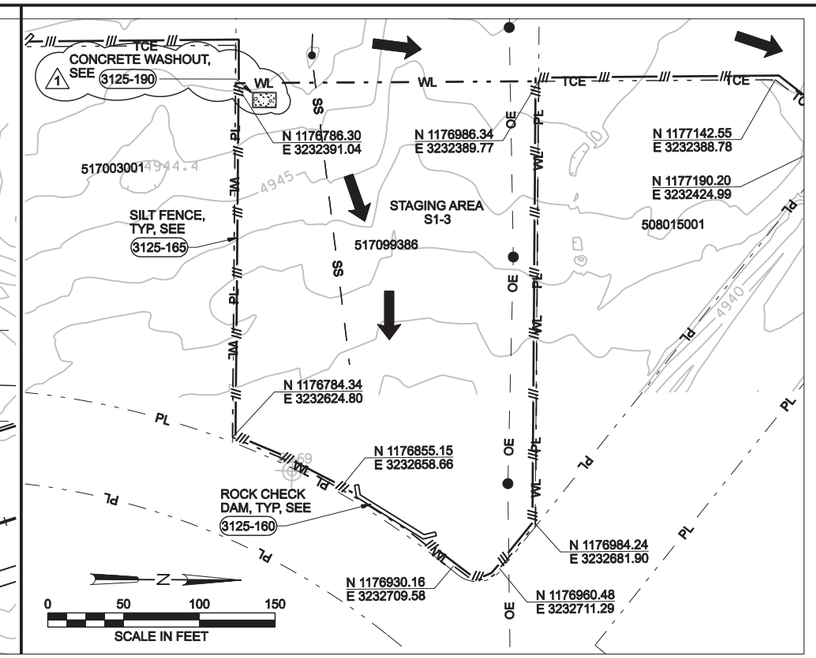

PARTIAL EASEMENT PLAN, SEE S1-PP-17

COLORADO LICENSED
JODY L. HENRY
39310
PROFESSIONAL ENGINEER

DSGN	E FORD				
DR	B NORVILLE				
CHK	G SIMPSON	1	7/13/11	ADDENDUM NO. 1 - TCE ADDED	BN	JH
APVD	J HENRY	NO.	DATE	REVISION	BY	APVD

VERIFY SCALE
BAR IS ONE INCH ON ORIGINAL DRAWING.
0 1"
IF NOT ONE INCH ON THIS SHEET, ADJUST SCALES ACCORDINGLY.

CH2MHILL
Colorado Springs, CO 80903

SOUTHERN DELIVERY SYSTEM
RAW WATER PIPELINE
SOUTH SECTION ONE

EROSION CONTROL AND EASEMENT PLANS

MISCELLANEOUS PARTIAL PLANS

SHEET	59
DWG	S1-EC-11
DATE	JULY 2011
PROJ	171473.20.SP

Colorado Springs Utilities Project Number: SDS-002 CSU Work Order Number: 1146977

FILENAME: SP105nEC11d_171473.dgn PLOT DATE: 8/4/2011 PLOT TIME: 3:50:53 PM

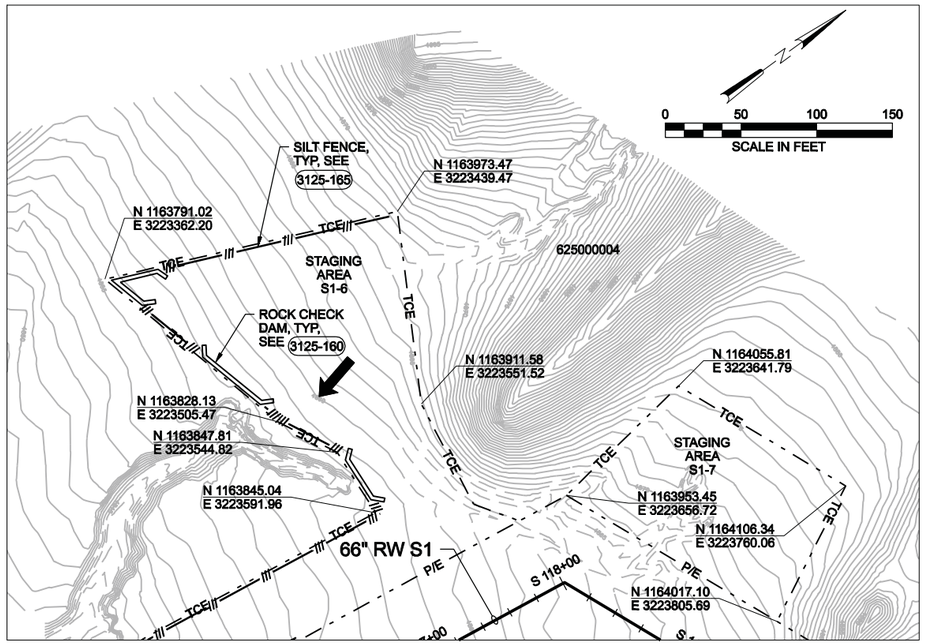

PARTIAL EASEMENT PLAN, SEE S1-PP-2

1

COLORADO LICENSED
JODY L. HENRY
39310
PROFESSIONAL ENGINEER

DSGN E FORD						VERIFY SCALE
DR B NORVILLE						BAR IS ONE INCH ON ORIGINAL DRAWING. 0 1" IF NOT ONE INCH ON THIS SHEET, ADJUST SCALES ACCORDINGLY.
CHK G SIMPSON	1	7/13/11	ADDENDUM NO. 1 - TCE ADDED	BN	JH	
APVD J HENRY	NO.	DATE	REVISION	BY	APVD	

CH2MHILL
Colorado Springs, CO 80903

SOUTHERN DELIVERY SYSTEM
RAW WATER PIPELINE
SOUTH SECTION ONE

EROSION CONTROL AND EASEMENT PLANS

MISCELLANEOUS PARTIAL PLANS

SHEET	59A
DWG	S1-EC-12
DATE	JULY 2011
PROJ	171473.20.SP

Colorado Springs Utilities Project Number: SDS-002 CSU Work Order Number: 1146977

FILENAME: SP105nEC12d_171473.dgn PLOT DATE: 7/25/2011 PLOT TIME: 12:03:39 PM

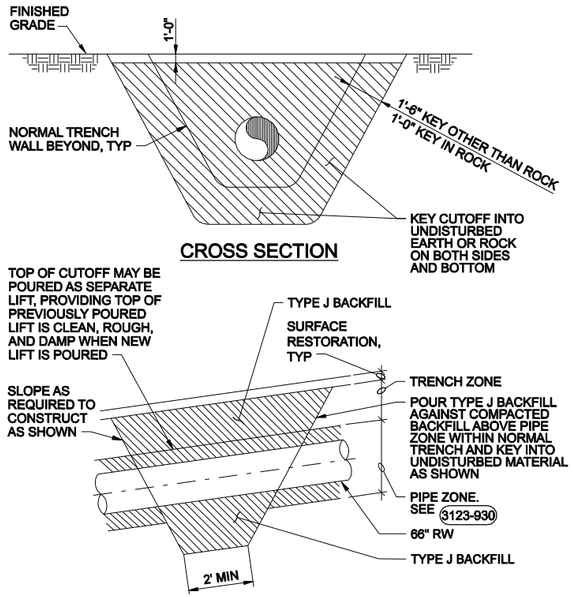

TRENCH PLUG

NTS

3123-900

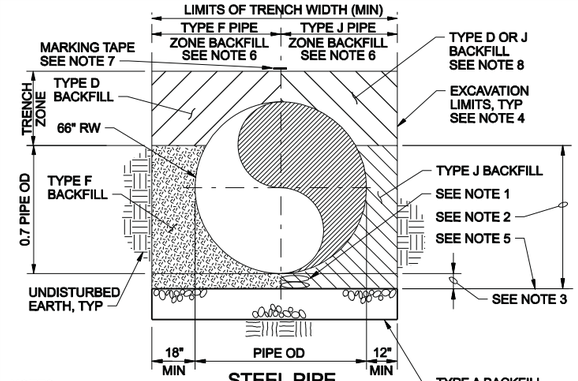

NOTES:

1. SAND BAG SUPPORTS IF TYPE J BACKFILL IS USED. PIPE BEDDING OTHERWISE.
2. PIPE ZONE.
3. PIPE BEDDING SHALL BE 6" MIN FOR TYPE J BACKFILL AND 8" MIN FOR TYPE F.
4. SLOPE TRENCH WALLS OR SHORE EXCAVATIONS FOR CONSTRUCTION SAFETY AND IN ACCORDANCE WITH OSHA REQUIREMENTS. FOR ROADWAY CROSSINGS, CONSTRUCTION PERMIT FROM ROADWAY OWNER WILL GOVERN THE USE OF SLOPED TRENCH SIDEWALLS.
5. DURING CONSTRUCTION, IF THE WATER TABLE IS DISCOVERED TO BE ABOVE THE TRENCH BOTTOM. NOTIFY THE ENGINEER, DEWATER AS SPECIFIED.
6. SEE 3123-930A, 3123-930B, 3123-930C, 3123-930D, & 3123-930E FOR TRENCH ZONE.
7. ~~INSTALL MARKING TAPE ONE FOOT ABOVE TOP OF PIPE.~~
8. INSTALL TYPE J BACKFILL TO 12" ABOVE TOP OF PIPE OR UP TO 12" BELOW EXST GRADE WHERE INDICATED ON DWGS. 1

TYPICAL PIPE ZONE

NTS

3123-930

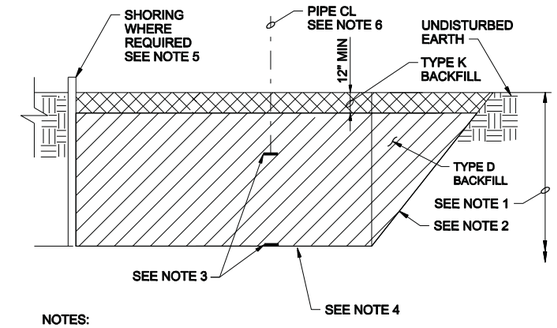

NOTES:

1. TRENCH ZONE.
2. SLOPE TRENCH WALLS OR SHORE EXCAVATIONS FOR CONSTRUCTION SAFETY AND IN ACCORDANCE WITH OSHA REQUIREMENTS.
3. INSTALL MARKING TAPE 2 FEET BELOW GRADE AND ONE FOOT ABOVE TOP OF PIPE AT CENTERLINE, AS INDICATED.
4. SEE 3123-930 .
5. REMOVE SHORING UNLESS OTHERWISE APPROVED BY THE CONSTRUCTION MANAGER.
6. LIMITS OF TRENCH WIDTH 3123-930 .

TRENCH ZONE - OPEN COUNTRY SURFACE RESTORATION

NTS

3123-930A

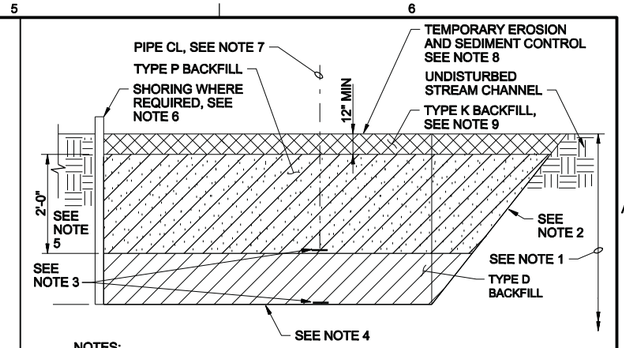

NOTES:

1. TRENCH ZONE.
2. SLOPE TRENCH WALLS OR SHORE EXCAVATIONS FOR CONSTRUCTION SAFETY AND IN ACCORDANCE WITH OSHA REQUIREMENTS.
3. INSTALL MARKING TAPE 2 FEET BELOW GRADE AND ONE FOOT ABOVE TOP OF PIPE AT CENTERLINE, AS INDICATED.
4. SEE 3123-930 .
5. INSTALL TYPE P BACKFILL IN TRENCH ZONE TWO FEET BELOW TYPE K BACKFILL.
6. REMOVE SHORING UNLESS OTHERWISE APPROVED BY THE CONSTRUCTION MANAGER.
7. LIMITS OF TRENCH WIDTH 3123-930.
8. INSTALL TEMPORARY EROSION AND SEDIMENT CONTROLS PER SPECIFICATION 01 57 13 TEMPORARY EROSION AND SEDIMENT CONTROLS.
9. USE NATIVE TOPSOIL FROM PROJECT SITE.

TRENCH ZONE - VEGETATED STREAM CHANNEL RESTORATION

NTS

3123-930B

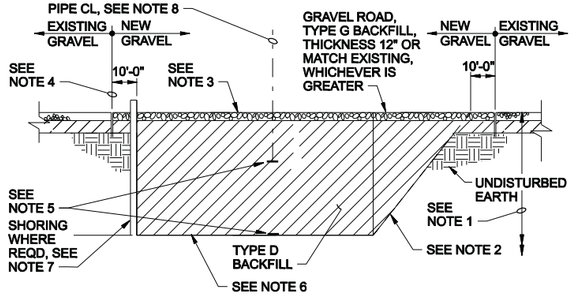

NOTES:

1. TRENCH ZONE.
2. SLOPE TRENCH WALLS OR SHORE EXCAVATIONS FOR CONSTRUCTION SAFETY AND IN ACCORDANCE WITH OSHA REQUIREMENTS. FOR ROADWAY CROSSINGS, CONSTRUCTION PERMIT FROM ROADWAY PERMITTING AUTHORITY WILL GOVERN THE USE OF SLOPED TRENCH SIDEWALLS.
3. REPLACE GRAVEL ROADWAY SECTION, MINIMUM THICKNESS 12".
4. EXTEND NEW GRAVEL 10 FEET OUTSIDE LIMITS OF TRENCH EXCAVATION EACH SIDE.
5. INSTALL MARKING TAPE 2 FEET BELOW GRADE AND ONE FOOT ABOVE TOP OF PIPE AT CENTERLINE, AS INDICATED.
6. SEE 3123-930.
7. REMOVE SHORING UNLESS OTHERWISE APPROVED BY THE CONSTRUCTION MANAGER.
8. LIMITS OF TRENCH WIDTH 3123-930.

TRENCH ZONE - GRAVEL SURFACE RESTORATION

NTS

3123-930C

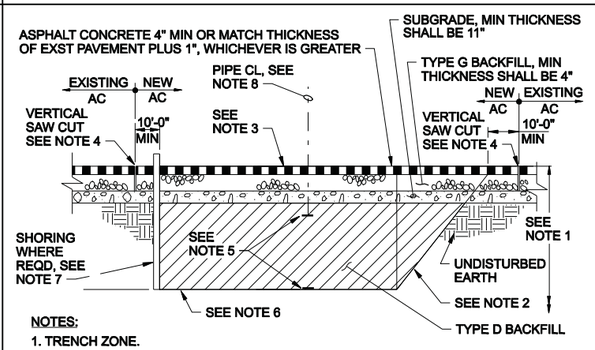

NOTES:

1. TRENCH ZONE.
2. SLOPE TRENCH WALLS OR SHORE EXCAVATIONS FOR CONSTRUCTION SAFETY IN ACCORDANCE WITH OSHA REQUIREMENTS. FOR ROADWAY CROSSINGS, CONSTRUCTION PERMIT FROM ROADWAY PERMITTING TRENCH SIDEWALLS.
3. REPLACE PAVED ROADWAY SECTION AS INDICATED.
4. CONDUCT SAW CUTS OF EXISTING PAVEMENT STRAIGHT, SQUARE AND PARALLEL TO THE TRENCH, A MINIMUM OF 10' OUTSIDE LIMITS OF TRENCH EXCAVATION. PAINT EDGE OF EXISTING ASPHALT WITH TACK COAT PRIOR TO PAVING. CRACK SEAL AFTER PAVING OPERATION.
5. INSTALL MARKING TAPE 4 FEET BELOW GRADE AND ONE FOOT ABOVE TOP OF PIPE AT CENTERLINE, AS INDICATED.
6. SEE 3123-930.
7. REMOVE SHORING UNLESS OTHERWISE DIRECTED BY THE CONSTRUCTION MANAGER.
8. LIMITS OF TRENCH WIDTH 3123-930 . PERMITTING AUTHORITY WILL GOVERN THE USE OF SLOPES AS INDICATED.

TRENCH ZONE - PAVED SURFACE RESTORATION

NTS

3123-930D

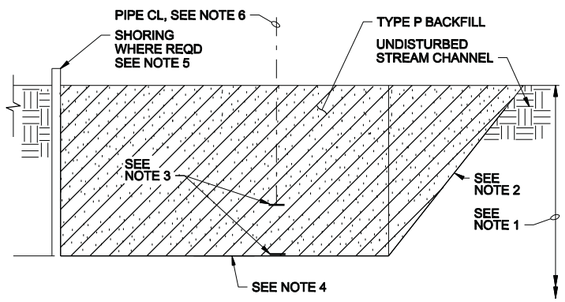

NOTES:

1. TRENCH ZONE.
2. SLOPE TRENCH WALLS OR SHORE EXCAVATIONS FOR CONSTRUCTION SAFETY IN ACCORDANCE WITH OSHA REQUIREMENTS.
3. INSTALL MARKING TAPE 3 FEET BELOW GRADE AND ONE FOOT ABOVE TOP OF PIPE AT CENTERLINE, AS INDICATED.
4. SEE 3123-930.
5. REMOVE SHORING UNLESS OTHERWISE APPROVED BY THE CONSTRUCTION MANAGER.
6. LIMITS OF TRENCH WIDTH 3123-930 .
7. IN SOME CASES CLSM MAY EXTEND INTO TRENCH ZONE.

TRENCH ZONE - NON-VEGETATED STREAM CHANNEL RESTORATION

NTS

3123-930E

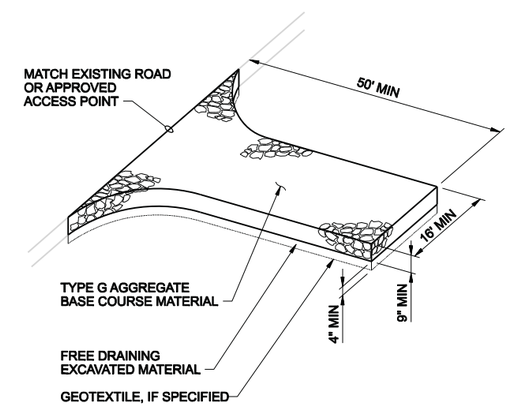

NOTES:

1. ADDITIONAL GRAVEL MAY HAVE TO BE ADDED PERIODICALLY TO MAINTAIN PROPER FUNCTION OF THE PAD.
2. REMOVE GRAVEL ENTRANCE AND REPLACE WITH NEW BASE COURSE PRIOR TO COMPLETION OF ACCESS ROAD
3. LOCATE AS REQUIRED WITHIN WORK LIMITS TO ACCOMODATE CONSTRUCTION.

GRAVEL CONSTRUCTION ENTRANCE

NTS

3125-130

COLORADO LICENSED
JODY L. HENRY
39310
PROFESSIONAL ENGINEER

DSGN	E FORD					
DR	B NORVILLE					
CHK	G SIMPSON	1	7/13/11	ADDENDUM NO. 1 - 3123-930 CHANGED	BN	JH
APVD	J HENRY	NO.	DATE	REVISION	BY	APVD

VERIFY SCALE
BAR IS ONE INCH ON ORIGINAL DRAWING.
0 1"
IF NOT ONE INCH ON THIS SHEET, ADJUST SCALES ACCORDINGLY.

CH2MHILL
Colorado Springs, CO 80903

SOUTHERN DELIVERY SYSTEM
RAW WATER PIPELINE
SOUTH SECTION ONE

STANDARD DETAILS

STANDARD DETAILS

SHEET	64
DWG	S1-SD-5
DATE	JULY 2011
PROJ	171473.20.SP

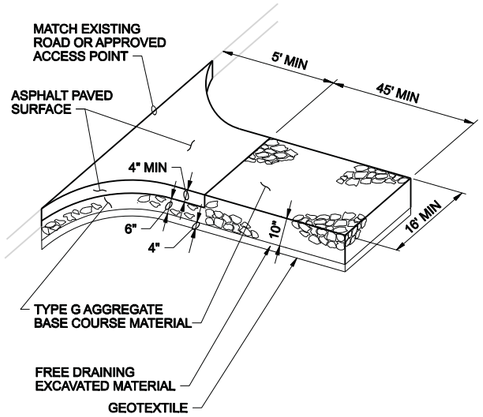

NOTES:

1. ADDITIONAL ASPHALT AND GRAVEL MAY HAVE TO BE ADDED PERIODICALLY TO MAINTAIN PROPER FUNCTION OF THE PAD.
2. REMOVE PAVED ENTRANCE AND REPLACE WITH NEW BASE COURSE PRIOR TO COMPLETION OF ACCESS ROAD.
3. LOCATE AS REQUIRED WITHIN WORK LIMITS TO ACCOMODATE CONSTRUCTION.

PAVED CONSTRUCTION ENTRANCE

NTS

3125-131

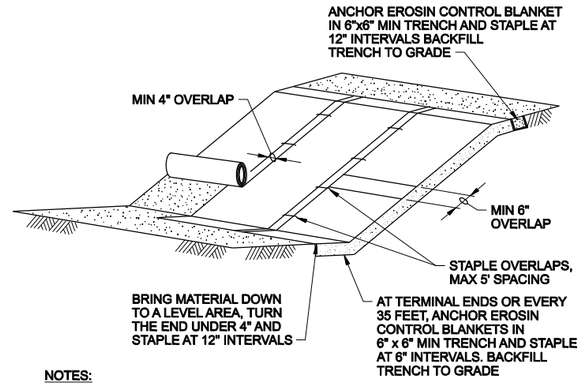

NOTES:

1. DO NOT STRETCH BLANKETS/MATTING TIGHT, ALLOW ROLLS TO MOLD TO ANY IRREGULARITIES.
2. STAPLING PATTERN AS PER MANUFACTURER'S RECOMMENDATIONS.
3. PREP SOIL BEFORE INSTALLATION IN ACCORDANCE WITH SPECIFICATIONS.

EROSION CONTROL BLANKET

NTS

3125-150

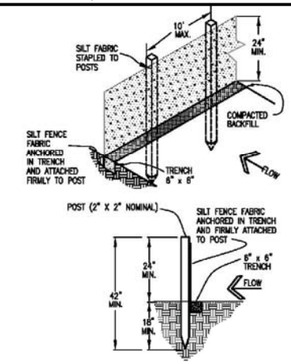

SILT FENCE

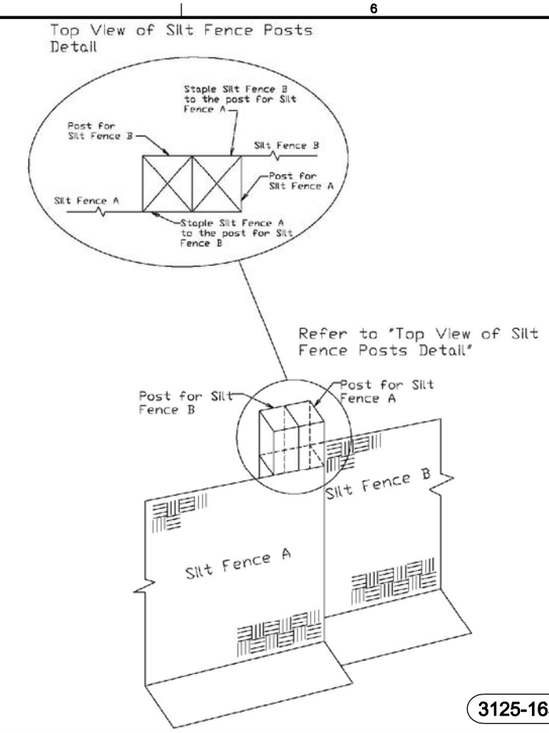

SILT FENCE NOTES

INSTALLATION REQUIREMENTS

1. SILT FENCES SHALL BE INSTALLED PRIOR TO ANY LAND DISTURBING ACTIVITIES.

2. WHEN JOINTS ARE NECESSARY, SILT FENCE GEOTEXTILE SHALL BE SPLICED TOGETHER ONLY AT SUPPORT POST AND SECURELY SEALED.

3. METAL POSTS SHALL BE "STUDDED TEE" OR "U" TYPE WITH MINIMUM WEIGHT OF 1.33 POUNDS PER LINEAR FOOT. WOOD POSTS SHALL HAVE A MINIMUM DIAMETER OR CROSS SECTION DIMENSION OF 2 INCHES.

4. THE FILTER MATERIAL SHALL BE FASTENED SECURELY TO METAL OR WOOD POSTS USING WIRE TIES, OR TO WOOD POSTS WITH 3/4" LONG #9 HEAVY-DUTY STAPLES. THE SILT FENCE GEOTEXTILE SHALL NOT BE STAPLED TO EXISTING TREES.

5. WHILE NOT REQUIRED, WIRE MESH FENCE MAY BE USED TO SUPPORT THE GEOTEXTILE. WIRE FENCE SHALL BE FASTENED SECURELY TO THE UPSLOPE SIDE OF THE POSTS USING HEAVY-DUTY WIRE STAPLES AT LEAST 3/4" LONG, TIE WIRES OR HOG RINGS. THE WIRE SHALL EXTEND INTO THE TRENCH A MINIMUM OF 6" AND SHALL NOT EXTEND MORE THAN 3' ABOVE THE ORIGINAL GROUND SURFACE.

6. ALONG THE TOE OF FILLS, INSTALL THE SILT FENCE ALONG A LEVEL CONTOUR AND PROVIDE AN AREA BEHIND THE FENCE FOR RUNOFF TO POND AND SEDIMENT TO SETTLE. A MINIMUM DISTANCE OF 5 FEET FROM THE TOE OF THE FILL IS RECOMMENDED.

7. THE HEIGHT OF THE SILT FENCE FROM THE GROUND SURFACE SHALL BE MINIMUM OF 24 INCHES AND SHALL NOT EXCEED 36 INCHES; HIGHER FENCES MAY INPOUND VOLUMES OF WATER SUFFICIENT TO CAUSE FAILURE OF THE STRUCTURE.

MAINTENANCE REQUIREMENTS

1. CONTRACTOR SHALL INSPECT SILT FENCES IMMEDIATELY AFTER EACH RAINFALL, AT LEAST DAILY DURING PROLONGED RAINFALL, AND WEEKLY DURING PERIODS OF NO RAINFALL. DAMAGED, COLLAPSED, UNENTRENCHED OR INEFFECTIVE SILT FENCES SHALL BE PROMPTLY REPAIRED OR REPLACED.

2. SEDIMENT SHALL BE REMOVED FROM BEHIND SILT FENCE WHEN IT ACCUMULATES TO HALF THE EXPOSED GEOTEXTILE HEIGHT.

3. SILT FENCES SHALL BE REMOVED WHEN ADEQUATE VEGETATIVE COVER IS ATTAINED AS APPROVED BY THE CITY.

SILT FENCE

NTS

3125-165

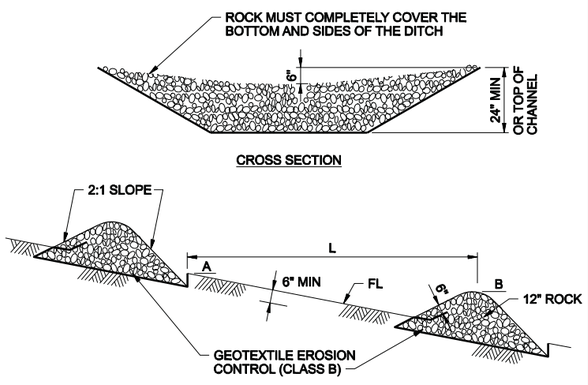

L = THE DISTANCE SUCH THAT POINTS A AND B ARE OF EQUAL ELEVATIONS

DAM SPACING

MAINTENANCE STANDARDS:

1. ANY SEDIMENT DEPOSITION OF MORE THAN 0.5 FEET SHALL BE REMOVED SO THAT THE CHANNEL IS RESTORED TO ITS DESIGN CAPACITY.
2. THE CHANNEL SHALL BE EXAMINED FOR SIGNS OF SCOURING AND EROSION OF THE BED AND BANKS. IF SCOURING OR EROSION HAS OCCURRED, AFFECTED AREAS SHALL BE PROTECTED BY RIP-RAP OR AN EROSION CONTROL BLANKET OR NET.

ROCK CHECK DAMS

NTS

3125-160

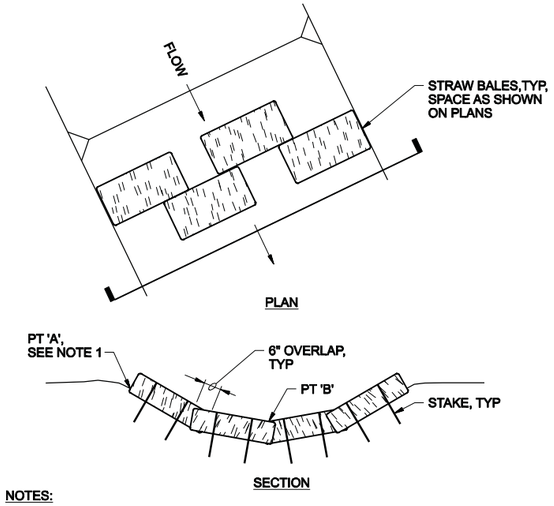

NOTES:

1. POINT 'A' MUST BE 6" MINIMUM HIGHER THAN PT 'B'.
2. STAKING OF BALES IS REQUIRED USING (2)2"x2"x3' LONG WOOD STAKES OR APPROVED EQUAL PER BALE.
3. DRIVE STAKES MINIMUM 12" INTO GROUND AND FLUSH WITH TOP OF BALES.
4. EMBED BALES MINIMUM OF 4" INTO GROUND SURFACE.
5. BIOFILTER BAGS TO BE USED, IF SPECIFIED.

STRAW BALES IN DITCHES

NTS

3125-170

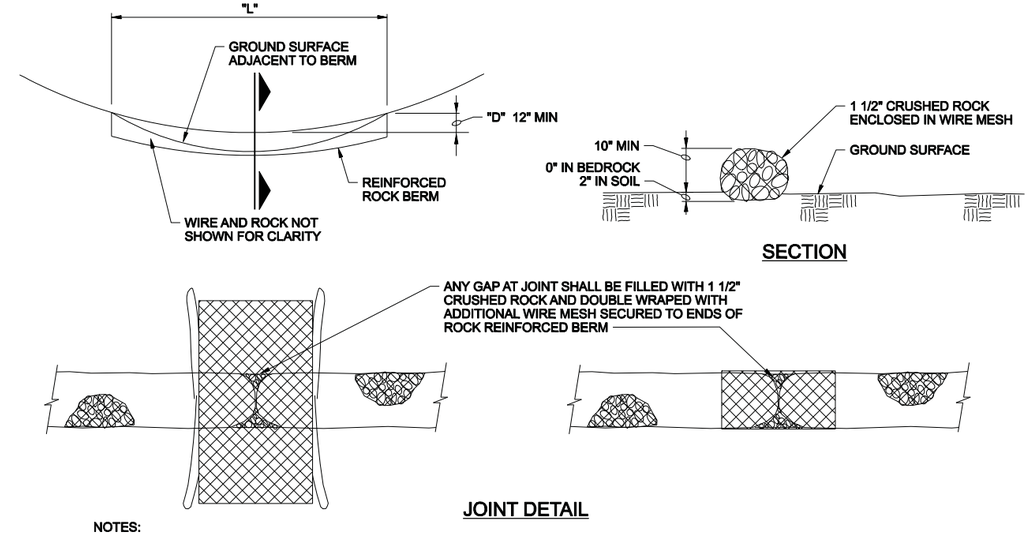

NOTES:

1. CRUSHED ROCK SHALL BE FRACTURED FACE (ALL SIDES). RECYCLED CONCRETE MEETING THE GRADATION MAY BE USED.
2. WIRE MESH SHALL BE FABRICATED OF 10 GAUGE WIRE TWISTED INTO A MESH WITH A MAXIMUM OPENING OF 1.0 INCH (COMMONLY TERMED CHICKEN WIRE). ROLL WIDTH SHALL BE 48 INCHES.
3. WIRE MESH SHALL BE SECURED USING "HOG RINGS" OR WIRE TIES AT 6-INCH CENTERS ALONG ALL JOINTS AND AT 2-INCH CENTERS ON ENDS OF BERM.
4. FOR CONCENTRATED FLOW AREAS, THE ENDS OF THE REINFORCED ROCK BERM SHALL BE 12" HIGHER THAN THE CENTER OF THE BERM.

ROCK SOCKS

NTS

3125-183

COLORADO LICENSED PROFESSIONAL ENGINEER GODY L. HENRY 39310 6/30/11

DSGN	E FORD					
DR	B NORVILLE					
CHK	G SIMPSON					
APVD	J HENRY	NO.	DATE	REVISION	BY	APVD

VERIFY SCALE
BAR IS ONE INCH ON ORIGINAL DRAWING.
0 1"
IF NOT ONE INCH ON THIS SHEET, ADJUST SCALES ACCORDINGLY.

CH2MHILL
Colorado Springs, CO 80903

SOUTHERN DELIVERY SYSTEM
RAW WATER PIPELINE
SOUTH SECTION ONE

STANDARD DETAILS

STANDARD DETAILS

SHEET	65
DWG	S1-SD-6
DATE	JULY 2011
PROJ	171473.20.SP

Colorado Springs Utilities Project Number: SDS-002 CSU Work Order Number: 1146977

FILENAME: SP1SDnD06d_171473.dgn PLOT DATE: 6/7/2011 PLOT TIME: 10:23:03 AM

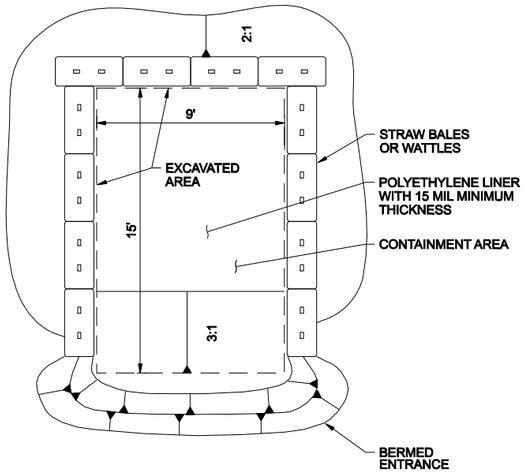

NOTE:
1. PROPERLY CLEAN UP AND DISPOSE OF WASHOUT AT APPROPRIATE LOCATION AFTER CONSTRUCTION.

CONCRETE WASHOUT
NTS

3125-190

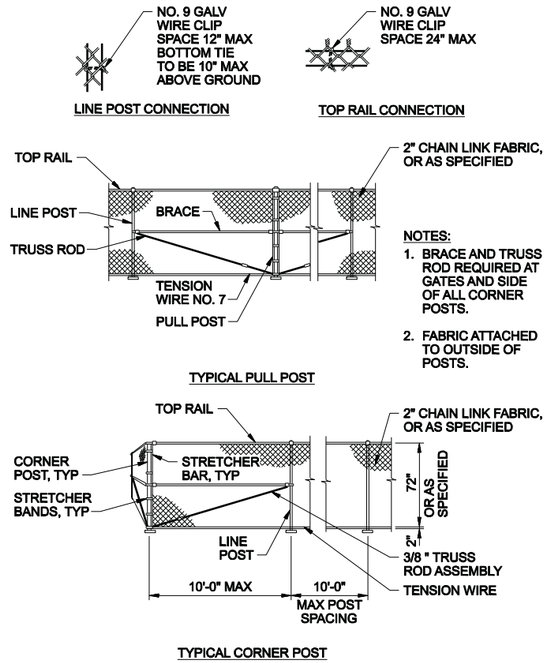

NOTES:
1. BRACE AND TRUSS ROD REQUIRED AT GATES AND SIDE OF ALL CORNER POSTS.
2. FABRIC ATTACHED TO OUTSIDE OF POSTS.

CHAIN LINK FENCE
NTS

3231-410

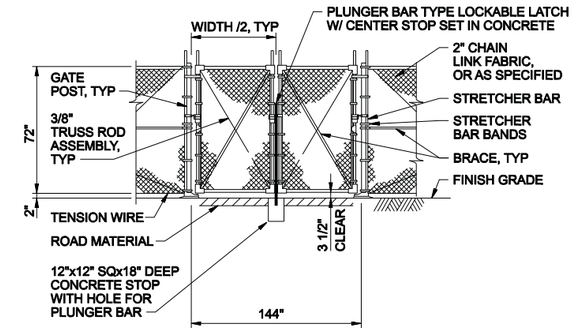

DOUBLE SWING GATE
NTS

3231-415

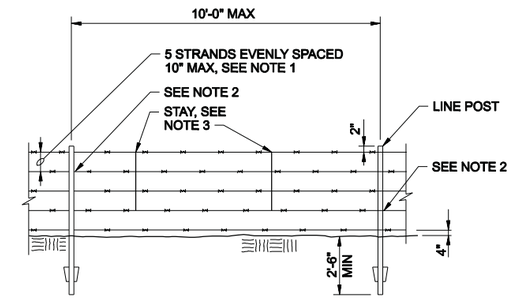

NOTES:
1. SPACING FOR BARBED WIRE FENCE, 5 STRAND SHOWN, ADJUST SPACING ACCORDINGLY FOR 4 STRAND.
2. ATTACH WIRE TO METAL FENCE POSTS WITH CLIPS AS SPECIFIED.
3. 2 STAYS PER PANEL REQUIRED, SPACE EVENLY.

WIRE FENCE
NTS

3231-451

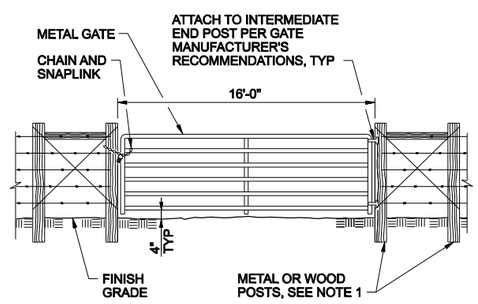

NOTE:
1. IF GALVANIZED TUBULAR STEEL IS USED FOR GATE END POST ASSEMBLY, FILL WITH CONCRETE. PROVIDE 1" HIGH GROUT CAP.

METAL GATE
NTS

3231-452

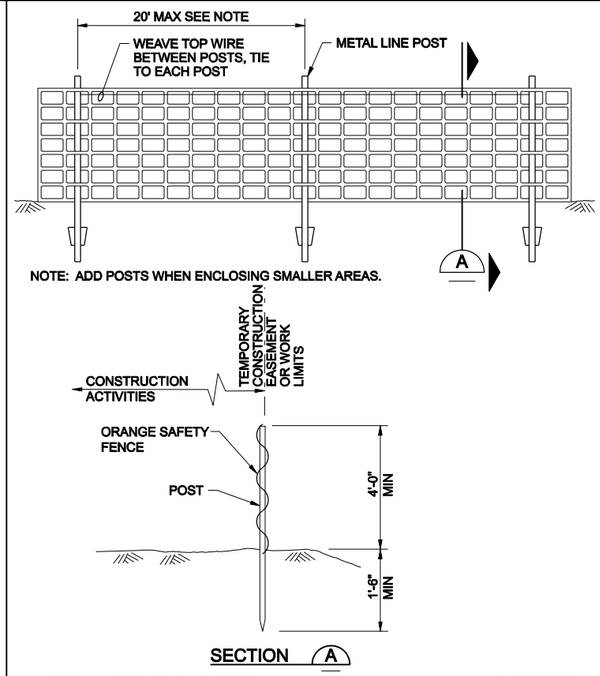

ORANGE SAFETY FENCE
NTS

3231-666

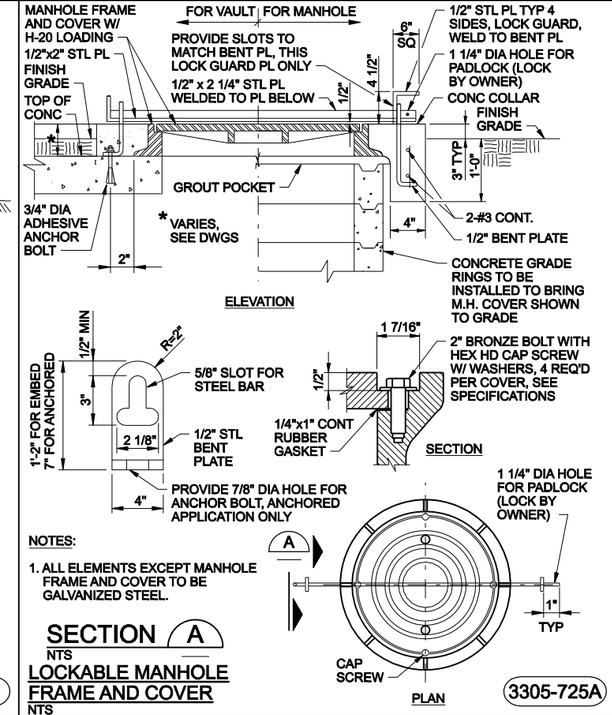

NOTES:
1. ALL ELEMENTS EXCEPT MANHOLE FRAME AND COVER TO BE GALVANIZED STEEL.

SECTION A
NTS

LOCKABLE MANHOLE FRAME AND COVER
NTS

3305-725A

COLORADO LICENSED PROFESSIONAL ENGINEER
JOHN L. HENRY
39310
6/30/11

DSGN	E FORD				
DR	B NORVILLE				
CHK	G SIMPSON				
APVD	J HENRY	NO.	DATE	REVISION	BY	APVD

VERIFY SCALE
BAR IS ONE INCH ON ORIGINAL DRAWING.
0 1"
IF NOT ONE INCH ON THIS SHEET, ADJUST SCALES ACCORDINGLY.

CH2MHILL
Colorado Springs, CO 80903

SOUTHERN DELIVERY SYSTEM
RAW WATER PIPELINE
SOUTH SECTION ONE

STANDARD DETAILS

STANDARD DETAILS

SHEET	66
DWG	S1-SD-7
DATE	JULY 2011
PROJ	171473.20.SP